Bonfiglioli
Riduttori

C-A-F-S series

Helical gear units C
Helical bevel gear units A
Shaft mounted gear units F
Single stage gearboxes S

PRODUCT

Bonfiglioli
Forever Forward

Chapter	Description	Page
GENERAL INFORMATION		**2**
1	Symbols and units of measure	2
2	Allowed temperature limits	4
3	Torque	5
4	Power	5
5	Thermal capacity	5
6	Efficiency	7
7	Gear ratio	8
8	Angular velocity	8
9	Moment of inertia	8
10	Service factor	9
11	Lubrication	10
12	Selection	12
13	Verification	15
14	Installation	16
15	Installation instructions	17
16	Storage	18
17	Conditions of supply	18
18	Paint specifications	18
HELICAL GEAR UNITS SERIES C		**20**
19	Design features	20
20	Versions	21
21	Designation	22
22	Mounting position and terminal box orientation	26
23	Overhung loads	29
24	Thrust loads	32
25	Gearmotor rating charts	33
26	Gearbox rating charts	78
27	Motor availability	100
28	Moment of inertia	103
29	Exact ratios	122
30	Dimensions	125
HELICAL BEVEL GEAR UNITS SERIES A		**166**
31	Design features	166
32	Versions	167
33	Designation	168
34	Mounting position and terminal box angular position	174
35	Overhung loads	176
36	Thrust loads	179
37	Shafts arrangement	179
38	Gearmotor rating charts	180
39	Gearbox rating charts	224
40	Motor availability	246
41	Moment of inertia	250
42	Exact ratios	271
43	Dimensions	273
44	Accessories	317
45	Customer' shaft	319

Chapter	Description	Page
HELICAL BEVEL GEAR UNITS SERIES A ATEX CONFIGURATION		**322**
46	Introduction to the Atex directives	322
47	Selection	325
48	Installation, use and maintenance	326
49	Construction of Atex-specified equipment	326
50	Versions	327
51	Designation	328
52	Information about gearbox and gearmotor	329
SHAFT MOUNTED GEAR UNITS SERIES F		**330**
53	Design features	330
54	Versions	331
55	Designation	332
56	Mounting position and terminal box angular position	337
57	Overhung loads	339
58	Thrust loads	342
59	Gearmotor rating charts	343
60	Gearbox rating charts	382
61	Motor availability	402
62	Moment of inertia	406
63	Exact ratios	423
64	Dimensions	424
65	Accessories	461
66	Customer' shaft	462
SINGLE STAGE GEARBOXES SERIES S		**464**
67	Design features	464
68	Versions	465
69	Designation	466
70	Mounting position and terminal box angular position	471
71	Overhung loads	474
72	Thrust loads	476
73	Gearmotor rating charts	477
74	Gearbox rating charts	492
75	Motor availability	497
76	Moment of inertia	498
77	Dimensions	502
ELECTRIC MOTORS		**512**
M1	Symbols and units of measurement	512
M2	General characteristics	513
M3	Mechanical features	516
M4	Electrical characteristics	520
M5	Asynchronous brake motors	526
M6	DC brake motors type BN_FD	527
M7	AC brake motors type BN_FA	531
M8	Brake release systems	534
M9	Options	536
M10	Motor rating charts	549
M11	Motors dimensions	566

Revisions

Refer to page 572 for the catalogue revision index. Visit www.bonfiglioli.com to search for catalogues with up-to-date revisions.

GENERAL INFORMATION

1 SYMBOLS AND UNITS OF MEASURE

Symbols	Units of Measure	Description
$A_{N\ 1,2}$	[N]	Permissible axial force
f_s	–	Service factor
f_T	–	Thermal factor
f_{TP}	–	Temperature factor
i	–	Gear ratio
I	–	Cyclic duration factor
J_C	[Kgm²]	Mass moment of inertia to be driven
J_M	[Kgm²]	Motor mass moment of inertia
J_R	[Kgm²]	Mass moment of inertia for the gear unit
K	–	Mass acceleration factor
K_r	–	Transmission element factor
$M_{1,2}$	[Nm]	Torque
$M_{c\ 1,2}$	[Nm]	Calculated torque
$M_{n\ 1,2}$	[Nm]	Rated torque
$M_{r\ 1,2}$	[Nm]	Torque demand
$n_{1,2}$	[min⁻¹]	Speed

Symbols	Units of Measure	Description
$P_{1,2}$	[kW]	Power
$P_{N\ 1,2}$	[kW]	Rated power
$P_{R\ 1,2}$	[kW]	Power demand
$R_{C\ 1,2}$	[N]	Calculated radial force
$R_{N\ 1,2}$	[N]	Permissible overhung load
S	–	Safety factor
t_a	[°C]	Ambient temperature
t_s	[°C]	Surface temperature
t_o	[°C]	Oil temperature
t_f	[min]	Work time under constant load
t_r	[min]	Rest time
η_d	–	Dynamic efficiency
η_s	–	Static efficiency
φ	[']	Output shaft angular backlash (with locked input shaft)

$_1$ value applies to input shaft

$_2$ value applies to output shaft

Bonfiglioli Riduttori

The symbol shows the page the information can be sorted from.

This symbol refers to the angle the overhung load applies (viewing from drive end).

Symbol refers to weight of gearmotors and speed reducers.
Figure for gearmotors incorporates the weight of the 4-pole motor and for life lubricated units, where applicable, the weight of the oil.

DANGER - WARNING
This symbol indicates situations of danger, which if ignored, may result in serious injury to the operator.

IMPORTANT
This symbol indicates important technical information.

Apply to equipment complying with “ATEX” Directive.

Series C	Series A	Series F	Series S	
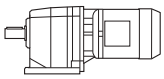				Gearmotor with compact motor.
		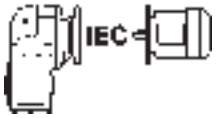		Gearmotor with IEC motor.
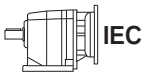				Gear unit with IEC motor interface.
		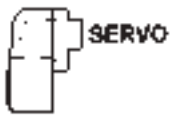		Gear unit with servomotor input adapter.
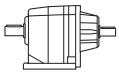			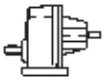	Speed reducer with solid input shaft.

2 ALLOWED TEMPERATURE LIMITS

Symbols	Description / Condition	Value (*)	
		Synthetic Oil	Mineral Oil
t_a	Ambient temperature		
$t_{au\ min}$	Minimum operating ambient temperature	**-30°C**	**-10°C**
$t_{au\ Max}$	Maximum operating ambient temperature	**+50°C**	**+40°C**
$t_{as\ min}$	Minimum storage ambient temperature	**-40°C**	**-10°C**
$t_{as\ Max}$	Maximum storage ambient temperature	**+50°C**	**+50°C**
t_s	Surface temperature		
$t_{s\ min}$	Minimum gearbox surface temperature starting with partial load (#)	**-25°C**	**-10°C**
$t_{sc\ min}$	Minimum gearbox surface temperature starting with full load	**-10°C**	**-5°C**
$t_{s\ Max}$	Maximum casing surface temperature during continuous operation (measured next to the gearbox input)	**+100°C**	**+100°C** (@)
t_o	Oil temperature		
$t_{o\ Max}$	Maximum oil temperature during continuous operation	**+95°C**	**+95°C** (@)

(*) = Refer to the table “Selection of the optimal oil viscosity” for further information about minimum and maximum values of different oil viscosity. For values of t_a < -20°C and t_s, t_o > 80 °C, choose (as permitted in the product configuration stage) the sealing type of the most suitable material to the type of application. If needed contact Bonfiglioli Technical Service.

(@) = Continuous operation it is not advised if t_s and t_o range is 80°C to 95 °C.

(#) = For full load start-up it is recommended to ramp-up and provide for greater absorption of the motor. If needed, contact Bonfiglioli Technical Service.

3 TORQUE

3.1 Rated torque M_{n2} [Nm]

The torque that can be transmitted continuously through the output shaft, with the gear unit operated under a service factor $f_s = 1$.
Rating is speed sensitive.

3.2 Required torque M_{r2} [Nm]

The torque demand based on application requirement.
It must always be equal to or less than torque M_{n2} the gearbox under study is rated for.

3.3 Calculated torque M_{c2} [Nm]

Computational torque value to be used when selecting the gearbox. It is calculated considering the required torque M_{r2} and service factor fs , as per the equation here after:

$$M_{c2} = M_{r2} \cdot f_s < M_{n2} \quad (1)$$

4 POWER

4.1 Rated power P_{n1} [kW]

In the gearbox selection charts this is the power applicable to input shaft, based on input speed n_1 and corresponding to service factor $f_s = 1$.

5 THERMAL CAPACITY P_t [kW]

P_t is the power that can be transmitted through the gear unit, under a continuous duty and an ambient temperature of 20 °C, without resulting into damage of the inner parts or degradation of the lubricant properties. Refer to chart (A1) for specific kW ratings.
In case of intermittent duty, or an operating ambient temperature other than the rated 20°C, the P_t value should be adjusted through the factor f_t , obtained from chart (A2), as per the following equation:
$P_t' = P_t \times f_t$

Gear units featuring more than 2 reductions and/or a gear ratio greater than i = 45 do not normally require the thermal limit to be checked as in these cases the thermal rating usually exceeds the mechanical rating.

(A 1)

P_t [kW] 20 °C		
	n_1 = 1400 min^{-1}	n_1 = 2800 min^{-1}
C 05 2	—	—
C 12 2	—	—
C 22 2	—	—
C 32 2	—	4.5
C 36 2	6.5	5.0
C 41 2	8.0	6.0
C 51 2	11.0	7.8
C 61 2	14.0	10.0
C 70 2	21	16.0
C 80 2	32	24
C 90 2	43	32
C 100 2	59	42

P_t [kW] 20 °C		
	n_1 = 1400 min^{-1}	n_1 = 2800 min^{-1}
A 05 2	2.0	1.5
A 10 2	2.1	1.5
A 20 2	6.0	5.4
A 30 2	8.0	6.6
A 35 2	9.5	8.2
A 41 2	11.5	9.6
A 50 2	20	18.0
A 55 2	21	18.0
A 60 2	27	23
A 70 3	31	24
A 80 3	44	33
A 90 3	64	48

P_t [kW] 20 °C		
	n_1 = 1400 min^{-1}	n_1 = 2800 min^{-1}
F 10 2	3.8	2.7
F 20 2	9.1	6.5
F 25 2	10.2	7.4
F 31 2	11.7	8.5
F 41 2	14.3	10.4
F 51 2	21.5	15.0
F 60 3	26.0	18.9
F 70 3	36.4	26.0
F 80 3	52	36
F 90 3	75	53

P_t [kW] 20 °C		
	n_1 = 1400 min^{-1}	n_1 = 2800 min^{-1}
S 10 1	5.5	4.9
S 20 1	7.8	7.2
S 30 1	10.0	9.1
S 40 1	15.6	14.3
S 50 1	21	18.9

(A 2)

f_t					
t_a [°C]	Continuous duty	Intermittent duty			
		Degree of intermittence [I]			
		80%	**60%**	**40%**	**20%**
40	0.80	1.1	1.3	1.5	1.6
30	0.85	1.3	1.5	1.6	1.8
20	1.0	1.5	1.6	1.8	2.0
10	1.15	1.6	1.8	2.0	2.3

Where cyclic duration factor (I)% is the relationship of operating time under load t_f to total time ($t_f + t_r$) expressed as a percentage.

$$I = \frac{t_f}{t_f + t_r} \cdot 100 \qquad (2)$$

The condition to be verified is:

$$P_{r1} \leq P_t \ x \ f_t \qquad (3)$$

6 EFFICIENCY

6.1 Dynamic efficiency η_d

Obtained from the relationship of delivered power P_2 to input power P_1 , according to the following equation:

$$\eta_d = \frac{P_2}{P_1} \cdot 100 \qquad [\%] \qquad (4)$$

(A 3)

	2 x	**3 x**	**4 x**
η_d	95%	93%	90%

	2 x	**3 x**	**4 x**
η_d	94%	91%	89%

	2 x	**3 x**	**4 x**
η_d	95%	93%	90%

	1 x
η_d	98%

7 GEAR RATIO i

The value for the gear ratio is referred to with the letter [i] and calculated through the relationship of the input speed n_1 to the output speed n_2:

$$i = \frac{n_1}{n_2} \qquad (5)$$

The gear ratio is usually a decimal number which in this catalogue is truncated at one digit after the comma (no decimals for i > 1000).
If interested in knowing the exact value see also chapters “EXACT RATIOS”.

8 ANGULAR VELOCITY

8.1 Input speed n_1 [min^{-1}]

The speed is related to the prime mover selected. Catalogue values refer to speed of either single or double speed motors that are common in the industry.
If the gearbox is driven by an external transmission it is recommended to operate it with a speed of 1400 min-1, or lower, in order to optimise operating conditions and lifetime.
Higher input speeds are permitted, however in this case consider that torque rating M_{n2} is affected adversely.
Please consult a Bonfiglioli representative.

8.2 Output speed n_2 [min^{-1}]

The output speed value n_2 is calculated from the relationship of input speed n_1 to the gear ratio i, as per the following equation:

$$n_2 = \frac{n_1}{i} \qquad (6)$$

9 MOMENT OF INERTIA J_r [Kgm^2]

Moments of inertia specified in the catalogue refer to the gear unit input axis.
They are therefore related to motor speed, in the case of direct motor mounting.

Bonfiglioli Riduttori

10 SERVICE FACTOR f_s

This factor is the numeric value describing reducer service duty. It takes into consideration, with unavoidable approximation, daily operating conditions, load variations and overloads connected with reducer application. In the graph (A4) below, after selecting proper “daily working hours” column, the service factor is given by intersecting the number of starts per hour and one of the K1, K2 or K3 curves. K_ curves are linked with the service nature (approximately: uniform, medium and heavy) through the acceleration factor of masses K, connected to the ratio between driven masses and motor inertia values. Regardless of the value given for the service factor, we would like to remind that in some applications, which for example involve lifting of parts, failure of the reducer may expose the operators to the risk of injuries. If in doubt, please contact our Technical Service Department.

(A 4)

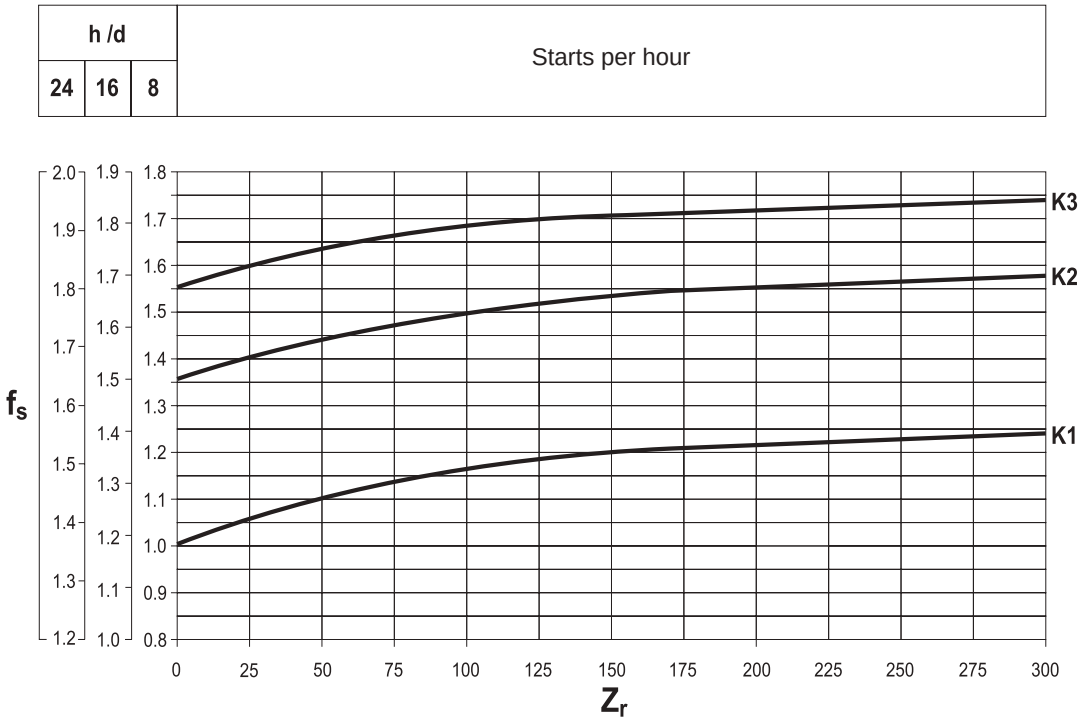

10.1 Acceleration factor of masses K

This parameter serves for selecting the right curve for the type of load.
The value is given by the following ratio:

(A 5)

$K = \frac{J_c}{J_m}$ →	J_c =	Moment of inertia of driven masses referred to motor drive shaft
	J_m =	Motor moment of inertia

K ≤ 0,25	→	**K1**	Uniform load
0,25 < K ≤ 3	→	**K2**	Moderate shock load
3 < K ≤ 10	→	**K3**	Heavy shock load
K > 10	→		Please consult Bonfiglioli Technical Service

11 LUBRICATION

Life lubricated gearboxes do not require any periodical oil changes.
Refer to the User's Manual available at www.bonfiglioli.com for indications about checking the oil level and its replacement for other types of gearboxes.
Do not mix mineral oils with synthetic oils and/or different brands.
However, oil level should be checked at regular intervals and topped up as required.
Check monthly if unit operates under intermittent duty, more frequently if duty is continuous.

11.1 Selection of the optimal oil viscosity (data relating to Shell Oils)

(A 6)

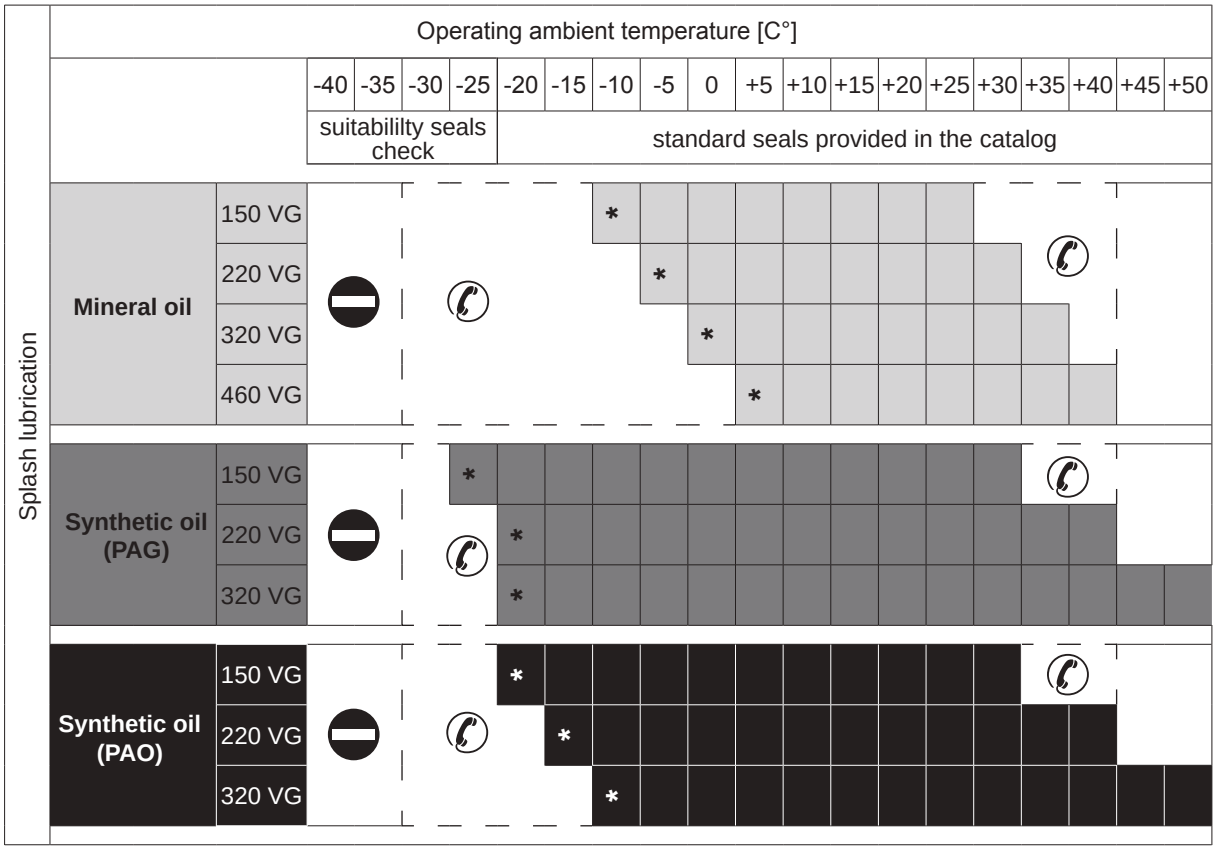

Recommended operating limits

Allowed operating limits.

Forbidden operating limits.

* = It is recommended to ramp-up and to provide for greater absorption of the motor.
If needed and in the event of impulse loads, contact Bonfiglioli Technical Service.

11.2 Lubrication for C, A, F, S series gearboxes

The inner parts of Bonfiglioli gear units are oil-bath and splash lubricated.
Frame sizes C 05...C 41, A 05...A 41, F 10...F 41, S 10...S 40 are supplied by the factory, or by the authorized dealers, already filled with oil.
Unless otherwise specified, units size C 51, A 50, F 51, S 50 and larger are usually supplied unlubricated at it will be the customer care to fill them with oil prior to putting them into operation.
In both cases, depending on the version, prior to putting the gear unit into operation may need to replace the closed plug used for transportation purposes with breather plug supplied with.
For the reference charts of oil plugs placement and quantity of lubricant, refer to the Installation, Operation and Maintenance Manual (available on www.bonfiglioli.com).
The “long life” poliglycol-based lubricant supplied by the factory, in the absence of contamination, does not require periodical oil changes throughout the lifetime of the gear unit.

11.3 Lubrication for A-EX (Atex) gearboxes

The inner parts of Bonfiglioli gear units are oil-bath and splash lubricated.
The ATEX version gear unit (with some exceptions see Table below) are factory-charged with “long-life” lubricant SHELL OMALA S4 WE 320 in the quantity suitable for the mounting position specified in the order.

(A 7)

A 05	A 10	A 20	A 30	A 35	A 41	A 50	A 55 (1)	A 60 2 (2)	A 60 3 (1)	A 60 4 (1)	A 70 (1)	A 80 (1)	A 90 (1)

Gearbox pre-filled with a synthetic “for life” lubricant Gearbox pre-filled with a synthetic lubricant

(1) Without lubricant for mounting positions B6 and B7
(2) Without lubricant for mounting positions B6, B7 and VB

Gearboxes are fitted with sealed filler plugs for transport purposes. Depending on version, they may be supplied with a vented plug which the user must fit before putting the gearbox into service.
Refer to the installation, operation and maintenance manual to replace the filler plug correctly. (These manuals are available in a number of languages and can be downloaded in pdf format from the website www.bonfiglioli.com.)
When a gearbox is supplied with no lubricant, it is recommended to fill it with a lubricant of a similar type, selected from those listed in its installation, operation and maintenance manual.

12 SELECTION

Some fundamental data are necessary to assist the correct selection of a gearbox or gearmotor. The table below (A7) briefly sums up this information.
To simplify selection, fill in the table and send a copy to our Technical Service which will select the most suitable drive unit for your application.

(A 8)

	Type of application	
P_{r2}	Output power at n_2 max	.....kW
P_{r2}'	Output power at n_2 min	.....kW
M_{r2}	Output torque at n_2 max	.....Nm
n_2	Max.output speed	.....min^{-1}
n_2'	Min.output speed	.....min^{-1}
n_1	Max.input speed	.....min^{-1}
n_1'	Min.input speed	.....min^{-1}
R_{c2}	Radial load on output shaft	.....N
x_2	Load application distance (*)	.....mm
	Load orientation at output	.....
	Output shaft rotation direction (CW-CCW) (**)	.....
R_{c1}	Radial load on input shaft	.....N
x_1	Load application distance (*)	.....mm
	Load orientation at input	.....
	Input shaft rotation direction (CW-CCW) (**)	.....
A_{c2}	Thrust load on output shaft (+/–)(***)	.....N

A_{c1}	Thrust load on input shaft (+/–)(***)	.....N
J_c	Moment of inertia of the load	.....Kgm^2
t_a	Ambient temperature	.....C°
	Altitude above sea level	.....m
	Duty type to IEC norms	S...../.....%
Z	Starting frequency	.....1/h
	Motor voltage	V
	Brake voltage	V
	Frequency	.....Hz
M_b	Brake torque	.....Nm
	Motor protection degree	IP.....
	Insulation class	.....

(*) Distance x1-2 is between force application point and shaft shoulder (if not indicated the force acting at mid-point of the shaft extension will be considered).

(**) CW = clockwise;
CCW = counterclockwise

(***) + = push
– = pull

Bonfiglioli Riduttori

For the selection of Series A gear units in Atex configuration, see also the specific chapter on page 322.

12.1 Selection of a gearmotor

a) Determine service factor f_s according to type of duty (factor K), number of starts per hour Z_r and hours of operation.

$$P_{r1} = \frac{M_{r2} \cdot n_2}{9550 \cdot \eta_d} \text{ [kW]} \quad (7)$$

b) From values of torque M_{r2}, speed n_2 and efficiency η_d the required input power can be calculated from the equation:

Value of η_d for the captioned gear unit can be sorted out from paragraph 6.

$$P_n \geq P_{r1} \quad (8)$$

c) Consult the gearmotor selection charts and locate the table corresponding to normalised power P_n:

Unless otherwise specified, power P_n of motors indicated in the catalogue refers to continuous duty S1. For motors used in conditions other than S1, the type of duty required by reference to CEI 2-3/IEC 34-1 Standards must be mentioned.
For duties from S2 to S8 in particular and for motor frame 132 or smaller, extra power output can be obtained with respect to continuous duty.
Accordingly the following condition must be satisfied:

$$P_n \geq \frac{P_{r1}}{f_m} \quad (9)$$

The adjusting factor f_m can be obtained from table (A9).

12.2 Intermittence ratio

$$I = \frac{t_f}{t_f + t_r} \cdot 100 \quad (10)$$

t_f = work time at constant load
t_r = rest time

(A 9)

	DUTY						
	S2			**S3***			**S4 - S8**
	Cycle duration [min]			Cyclic duration factor (l)			Please contact us
	10	**30**	**60**	**25%**	**40%**	**60%**	
f_m	1.35	1.15	1.05	1.25	1.15	1.1	

* Cycle duration, in any event, must be 10 minutes or less. If it is longer, please contact our Technical Service.

Next, refer to the appropriate $\mathbf{P_n}$ section within the gearmotor selection charts and locate the unit that features the desired output speed $\mathbf{n_2}$, or closest to, along with a safety factor **S** that meets or exceeds the applicable service factor $\mathbf{f_s}$.

The safety factor is so defined:

$$S = \frac{M_{n2}}{M_2} = \frac{P_{n1}}{P_1} \quad (11)$$

As standard, gear and motor combinations are implemented with 2, 4 and 6 pole motors, 50 Hz supplied.
Should the drive speed be different from 2800, 1400 or 900 min^{-1}, base the selection on the gear unit nominal rating.

12.3 Selection of speed reducer and gearbox with IEC motor adapter

a) Determine service factor f_s.

b) Assuming the required output torque for the application M_{r2} is known, the calculation torque can be then defined as:

$$M_{c2} = M_{r2} \cdot f_s \quad (12)$$

c) The gear ratio is calculated according to requested output speed n_2 and drive speed n_1:

$$i = \frac{n_1}{n_2} \quad (13)$$

Bonfiglioli Riduttori

Once values for M_{c2} and i are known consult the rating charts under the appropriate input speed n_1 and locate the gear unit that features the gear ratio closest to [i] and at same time offers a rated torque value M_{n2} so that:

$$M_{n2} \geq M_{c2} \quad (14)$$

If a IEC normalized motor must be fitted check geometrical compatibility with the gear unit at paragraph “MOTOR AVAILABILITY”.

13 VERIFICATION

After the selection of the speed reducer, or gearmotor, is complete it is recommended that the following verifications are conducted:

a) Thermal capacity
Make sure that the thermal capacity of the gearbox is equal to or greater than the power required by the application according to equation (3) on page 7.
If this condition is not verified, select a larger gearbox or apply a forced cooling system.

b) Maximum torque
The maximum torque (intended as instantaneous peak load) applicable to the gearbox must not, in general, exceed 200% of rated torque M_{n2}. Therefore, check that this limit is not exceeded, using suitable torque limiting devices, if necessary.
For three-phase double speed motors, it is important to pay attention to the switching torque which is generated when switching from high to low speed, because it could be significantly higher than maximum torque.
A simple, economical way to minimize overloading is to power only two phases of the motor during switch-over (power-up time on two phases can be controlled with a time-relay):

$M_{g2} = 0.5 \cdot M_{g3}$
M_{g2} = Switching torque with two-phase power-up
M_{g3} = Switching torque with three-phase power-up

We recommend, in any event, to contact our Technical Service.

c) Radial loads
Make sure that radial forces applying on input and/or output shaft are within permittend catalogue values.
If they were higher consider designing a different bearing arrangement before switching to a larger gear unit.
Catalogue values for rated overhung loads refer to mid-point of shaft under study.
Should application point of the overhung load be localised further out the revised loading capability must be adjusted as per instructions given in this manual.
Please refer to the paragraphs relating to radial loads.

d) Thrust loads
Actual thrust load must be found within 20% of the equivalent overhung load capacity.
Should an extremely high, or a combination of radial and axial load apply, consult Bonfiglioli Technical Service.

e) Starts per hour
For duties featuring a high number of switches the actual starting capability in loaded condition [Z] must be calculated.
Actual number of starts per hour must be lower than value so calculated.

14 INSTALLATION

The following installation instructions must be observed:

a) Make sure that the gearbox is correctly secured to avoid vibrations.
If shocks or overloads are expected, install hydraulic couplings, clutches, torque limiters, etc.

b) Before being paint coated, the machined surfaces and the outer face of the oil seals must be protected to prevent paint drying out the rubber and jeopardising the sealing function.

c) Parts fitted on the gearbox output shaft must be machined to ISO H7 tolerance to prevent interference fits that could damage the gearbox itself.
Further, to mount or remove such parts, use suitable pullers or extraction devices using the tapped hole located at the top of the shaft extension.

d) Mating surfaces must be cleaned and treated with suitable protective products before mounting to avoid oxidation and, as a result, seizure of parts.

e) Prior to putting the gear unit into operation make sure that the equipment that incorporates the same complies with the current revision of the Machines Directive 2006/42/EC.

f) Before starting up the machine, make sure that oil level conforms to the mounting position specified for the gear unit and the viscosity is adequate (refer to the User's Manual available at www.bonfiglioli.com).

g) For outdoor installation provide adequate guards in order to protect the drive from rainfalls as well as direct sun radiation.

14.1 Fitting servomotors to gear heads featuring a clamping device (adapter type SC)

Turn the clamping device until its slot is aligned to those that are milled on the reducer input shaft. If the motor shaft features a key, this must be removed and the relevant keyway must also be aligned with the slots of clamping device and gear head input shaft, prior to inserting the servomotor into site. The keyway must be sitting on the same side as the locking screw. Tighten the bolts that hold the servomotor to the gear head, insert a torque wrench through the hole on the side of the flange and tighten the locking screw of the clamping device to the torque that is specified in the drawing section for the given adapter.

15 INSTALLATION INSTRUCTIONS

Schemes in table (A10) show the 3 possible installation patterns for A gear units to the machine frame. For each of these circumstances, table (A11) indicates exagonal head screw sizes to be used. Besides, to facilitate the installation, we suggest to use a wrench of the type shown in table (A10).

(A 10)

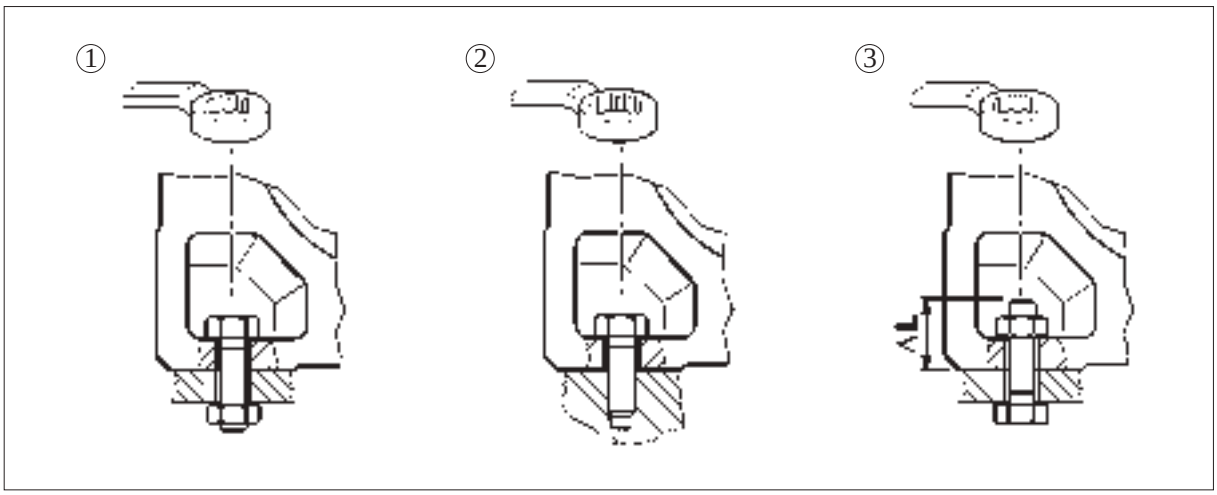

(A 11)

	Bolt type			
	①	②	③	ΔL (mm)
A 05	M8x22	M8x20	M8x ...	22
A 10	M8x25	M8x20	M8x …	20
A 20	M8x25	M8x20	M8x …	20
A 30	M10x30	M10x25	M10x …	25
A 35	M10x30	M10x25	M10x ...	25
A 41	M12x35	M12x30	M12x …	30

	Bolt type			
	①	②	③	ΔL (mm)
A 50	M14x45	M14x40	M14x …	35
A 55	M14x40	M14x40	M14x ...	35
A 60	M16x50	M16x45	M16x …	40
A 70	M20x60	M20x55	M20x …	45
A 80	M24x70	M24x65	M24x …	55
A 90	M24x90	M24x80	M24x …	65

16 STORAGE

Observe the following instructions to ensure correct storage of the products:

a) Do not store outdoors, in areas exposed to weather or with excessive humidity.

b) Always place boards, wood or other material between the products and the floor.
The gearboxes should not have direct contact with the floor.

c) In case of long-term storage all machined surfaces such as flanges, shafts and couplings must be coated with a suitable rust inhibiting product (Mobilarma 248 or equivalent).

Furthermore gear units must be placed with the fill plug in the highest position and filled up with oil. Before putting the units into operation the appropriate quantity, and type, of oil must be restored (refer to the User's Manual available at www.bonfiglioli.com).

17 CONDITIONS OF SUPPLY

Gear units are supplied as follows:

a) configured for installation in the mounting position specified when ordering;

b) tested to manufacturer specifications;

c) mating machined surfaces come unpainted;

d) nuts and bolts for mounting motors are provided;

e) shafts are protected during transportation by plastic caps;

f) supplied with lifting lug (where applicable).

18 PAINT SPECIFICATIONS

Specifications for paint applied to gearboxes (where applicable) may be obtained from the branches or dealers that supplied the units.

19 DESIGN FEATURES

The main design characteristics are:
- modularity
- space effective
- universal mounting
- high efficiency
- quite operation
- gears in hardened and case-hardened steel
- bare aluminium housing for sizes 05, 12, 22 and 32.
  Larger frame sizes come in sturdy cast iron housings
- input and output shafts from high grade steel.

(B 12)

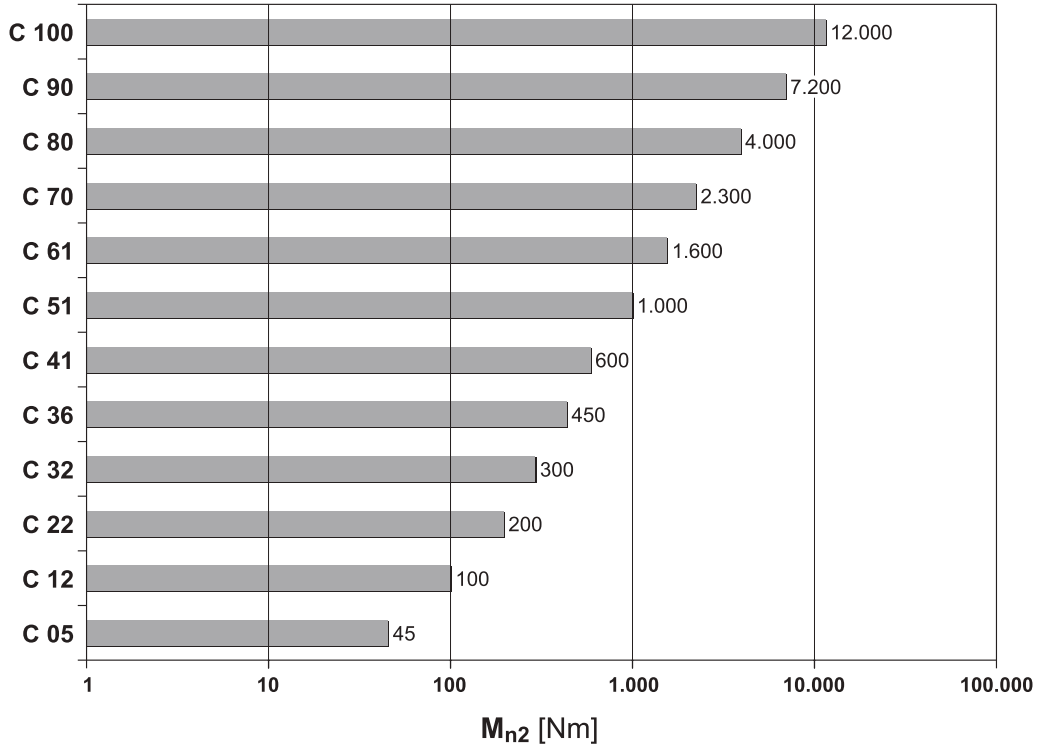

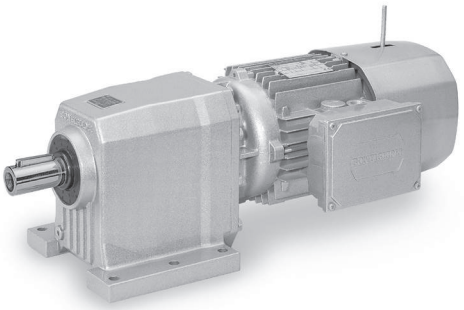

20 VERSIONS

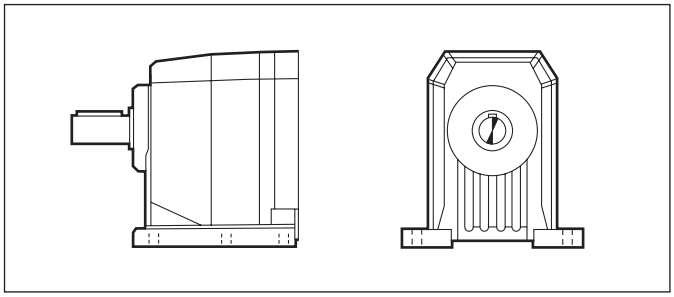

P

Foot mount

C 05 ... C 100

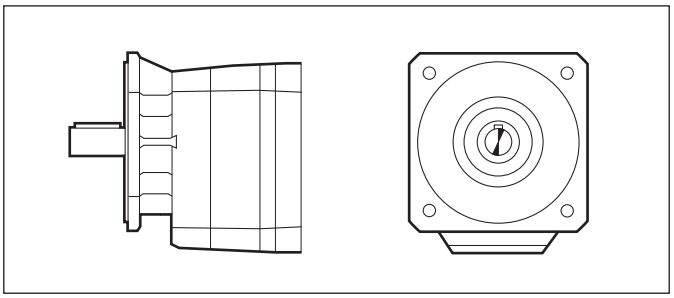

F

Flange mount

C 05 ... C 32
C 70 ... C 100

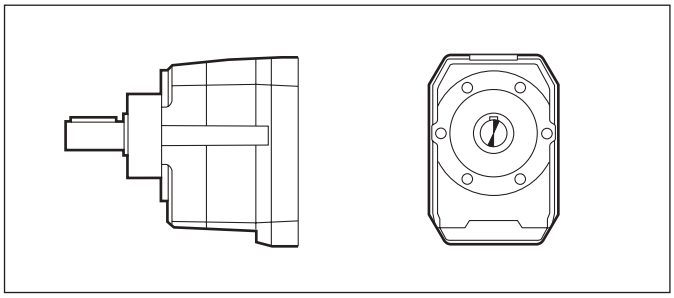

U

UNIBOX- universal housing

C 12 ... C 61

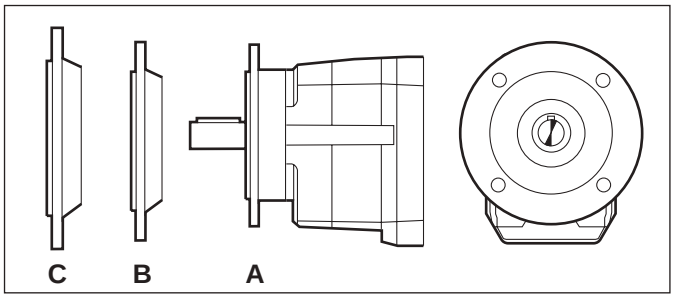

UF

UNIBOX bolt-on flange

C 12 ... C 61

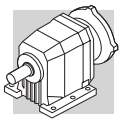

21 DESIGNATION

GEAR UNIT

C 32 2 F 52.4 S1 B5 .....

OPTIONS

MOUNTING POSITION

C...P: **B3** (Standard), B6, B7, B8, V5, V6
C...F/U/UF: **B5** (Standard), B51, B53, B52, V1, V3

INPUT CONFIGURATION

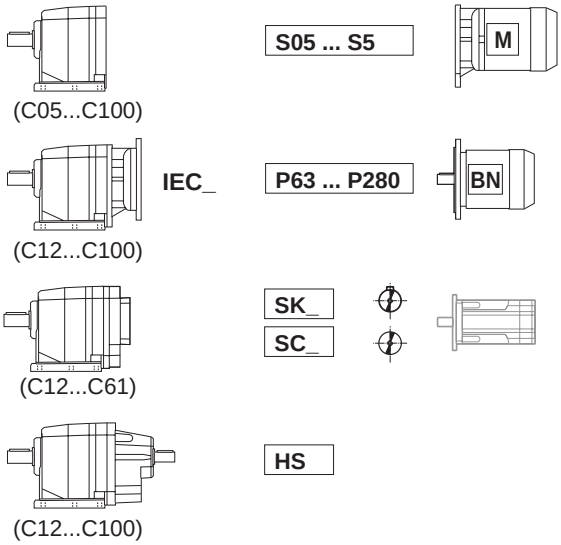

GEAR RATIO

VERSION

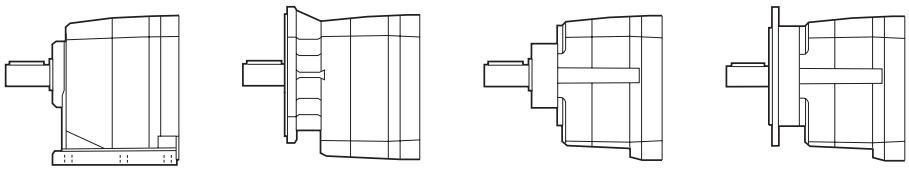

P (C05...C100)

F (C05...C32) (C70...C100)

U (C12...C61)

UFA UFB UFC (C12...C61)

REDUCTIONS
2, **3**, **4**

GEAR FRAME SIZE
05, **12**, **22**, **32**, **36**, **41**, **51**, **61**, **70**, **80**, **90**, **100**

TYPE: **C** = helical in-line gear units

MOTOR | BRAKE

M 1LA 4 230/400-50 IP54 CLF ..... **W FD** 7.5 R SB 220 SA .....

OPTIONS

BRAKE SUPPLY

RECTIFIER TYPE
AC/DC
NB, **SB**, **NBR**, **SBR**

BRAKE HAND RELEASE
R, **RM**

BRAKE TORQUE

BRAKE TYPE
FD (d.c. brake)
FA (a.c. brake)

TERMINAL BOX POSITION
W (default), **N**, **E**, **S**

MOTOR MOUNTING
— (compact motor)
B5 (IEC - motor)

INSULATION CLASS
CL F standard
CL H option

DEGREE OF PROTECTION
IP55 standard (IP54 - brake motor)

VOLTAGE - FREQUENCY

POLE NUMBER
2, **4**, **6**, **2/4**, **2/6**, **2/8**, **2/12**, **4/6**, **4/8**

MOTOR SIZE
0B ... 5LA (compact motor)
63A ... 280M (IEC motor)

MOTOR TYPE
M = compact 3-phase
BN = IEC 3-phase

21.1 Gearbox options

SO
Gear units C05, C12, C22, C32, C36, C41, usually factory filled with oil, to be supplied unlubricated.

LO
Gearboxes C51, C61, C70, C80, C90, C100 usually supplied without oil, to be supplied with synthetic oil currently used by BONFIGLIOLI RIDUTTORI and filled according to the mounting position specified.

DL
The output shaft features a dual oil seal.

DV
Dual oil seals on input shaft. (Only available for integral gearmotors).

VV
Fluoro elastomer oil seal on input shaft.

PV
Both input and output shafts feature Fluoro elastomer oil seals.

RB
Gear units C12, C22, C32, C36, C41, C51 and C61, usually supplied with standard values of angular backlash, are, in this case, supplied with reduced angular backlash values.
The following table specifies the corresponding figures of angular backlash.

(B 13)

		standard			RB	
C 05	i =	5.5 ; 9.3 ; 15.6 ; 27.1	6.7 ; 7.4 ; 11.2 ; 12.5 ; 18.9 ; 21.0 ; 32.8_44.7		—	
	φ [’]	**34**	**29**			
C 12	i =	2.8_6.2	7.6_66.2		2.8_6.2	7.6_66.2
	φ [’]	**55**	**29**		**—**	**13**
C 22	i =	2.7_6.1	7.1_261.0		2.7_6.1	7.1_261.0
	φ [’]	**47**	**25**		**—**	**12**
C 32	i =	2.9_6.3	7.2_274.7		2.9_6.3	7.2_274.7
	φ [’]	**39**	**21**		**—**	**11**
C 36	i =	2.7_5.8	6.8_19.0	22.1_848.5	2.7_5.8	6.8_848.5
	φ [’]	**37**	**20**	**17**	**—**	**10**
C 41 2	i =	2.7_6.0	6.4_44.8	—	2.7_6.0	6.4_44.8
	φ [’]	**34**	**17**		**—**	**9**
C 41 3/4	i =	—	—	28.5_855.5	—	28.5_855.5
	φ [’]			**15**		**9**
C 51 2	i =	2.6_5.6	7.0_57.0	—	2.6_5.6	7.0_57.0
	φ [’]	**32**	**15**		**—**	**8**
C 51 3/4	i =	—	—	21.8_884.9	—	21.8_884.9
	φ [’]			**13**		**8**
C 61 2	i =	2.8_6.0	6.7_38.0	—	2.8_6.0	6.7_38.0
	φ [’]	**27**	**13**		**12**	**7**
C 61 3/4	i =	—	—	26.8_796.1	—	26.8_796.1
	φ [’]			**11**		**7**
C 70	i =	4.6_34.7	41.3_1476		—	
	φ [’]	**18**	**20**			
C 80	i =	5.6_39.1	43.5_1481		—	
	φ [’]	**16**	**18**			
C 90	i =	5.2_35.1	39.4_1240		—	
	φ [’]	**16**	**18**			
C 100	i =	4.9_29.6	34.3_1081		—	
	φ [’]	**14**	**16**			

For the delivery timeframe contact the Bonfiglioli’s sales network

SURFACE PROTECTION

When no specific protection class is requested, the painted (ferrous) surfaces of gearboxes are protected to at least corrosivity class C2 (UNI EN ISO 12944-2). For improved resistance to atmospheric corrosion, gearboxes can be delivered with **C3** and **C4** surface protection, obtained by painting the complete gearbox.

(B 14)

SURFACE PROTECTION	Typical environments	Maximum surface temperature	Corrosivity class according to UNI EN ISO 12944-2
C3	Urban and industrial environments with up to 100% relative humidity (medium air pollution)	120°C	C3
C4	Industrial areas, coastal areas, chemical plant, with up to 100% relative humidity (high air pollution)	120°C	C4

Gearboxes with optional protection to class **C3** or **C4** are available in a choice of colours.
If no specific colour is requested (see the “PAINTING” option) gearboxes are finished in RAL 7042.
Gearboxes can also be supplied with surface protection for corrosivity class **C5** according to UNI EN ISO 12944-2. Contact our Technical Service for further details.

PAINTING

Gearboxes with optional protection to class C3 or C4 are available in the colours listed in the following table.

(B 15)

PAINTING	Colour	RAL number
RAL7042*	Traffic Grey A	7042
RAL5010	Gentian Blue	5010
RAL9005	Jet Black	9005
RAL9006	White Aluminium	9006
RAL9010	Pure White	9010

* Gearboxes are supplied in this standard colour if no other colour is specified.

NOTE – “PAINTING” options can only be specified in conjunction with “SURFACE PROTECTION” options.

CERTIFICATES

AC - Certificate of compliance
The document certifies the compliance of the product with the purchase order and the construction in conformity with the applicable procedures of the Bonfiglioli Quality System.

CC - Inspection certificate
The document entails checking on order compliance, the visual inspection of external conditions and of mating dimensions. Checking on main functional parameters in unloaded conditions is also performed along with oil seal proofing, both in static and in running conditions. Units inspected are sampled within the shipping batch and marked individually.

21.2 Motor options

AL, AR
A backstop device on the motor itself, as described in the electric motors section of this catalogue, is available for gearmotors with integral M Series motors. The following table shows the direction of free rotation of the gearbox, on the basis of which the correct option must be selected.

(B 16)

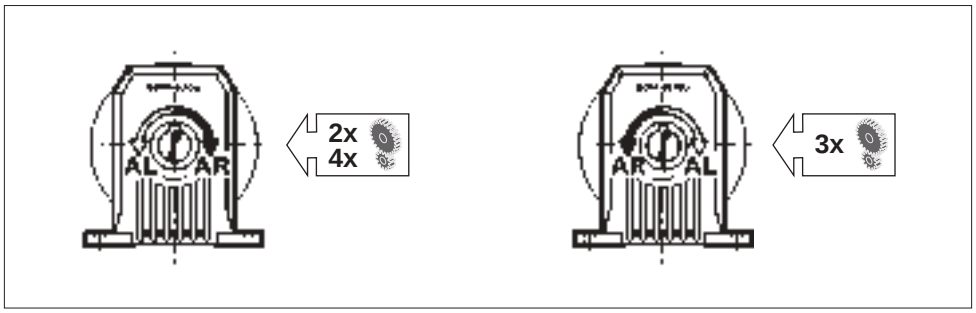

For further information on options, consult the electric motors section.

22 MOUNTING POSITION AND TERMINAL BOX ORIENTATION

Location of motor terminal box can be specified by viewing the motor from the fan side; standard location is shown in black (W).

Angular position of the brake release lever.
Unless otherwise specified, brake motors have the manual device side located, 90° apart from terminal box. Different angles can be specified through the relevant options available.

(B 17)

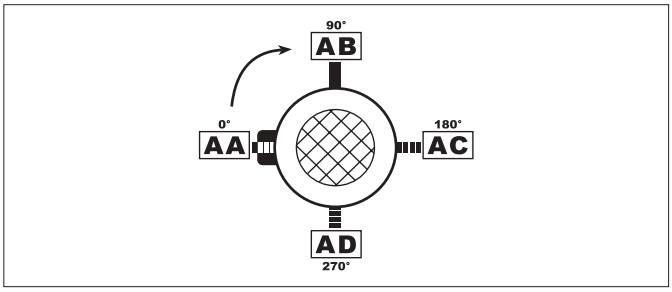

C ... P

B3

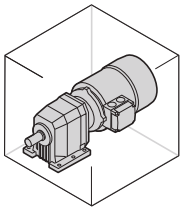
_S

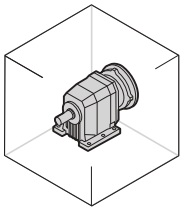
_P(IEC) _SK / _SC

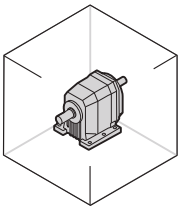
_HS

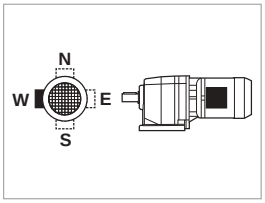

B6

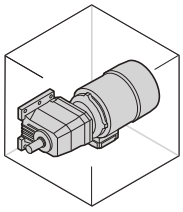
_S

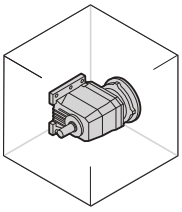
_P(IEC) _SK / _SC

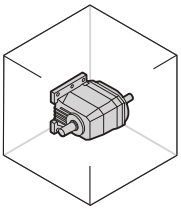
_HS

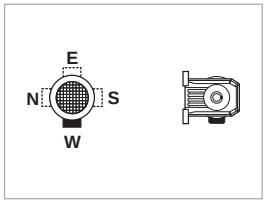

B7

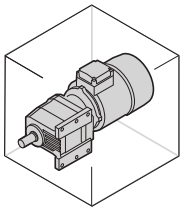
_S

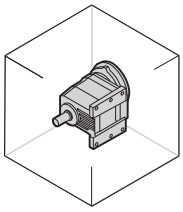
_P(IEC) _SK / _SC

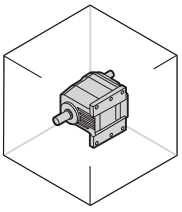
_HS

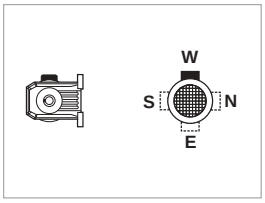

B8

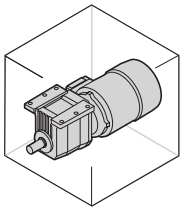
_S

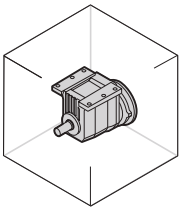
_P(IEC) _SK / _SC

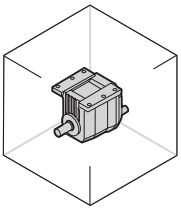
_HS

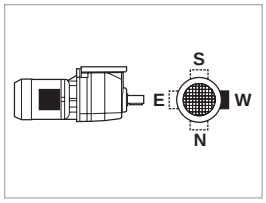

V5

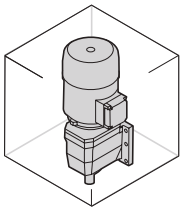
_S

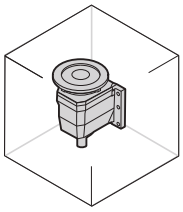
_P(IEC) _SK / _SC

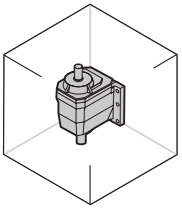
_HS

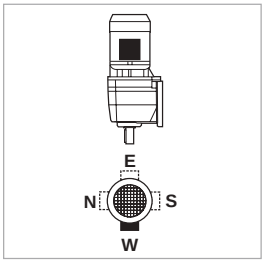

V6

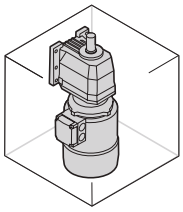
_S

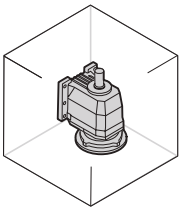
_P(IEC) _SK / _SC

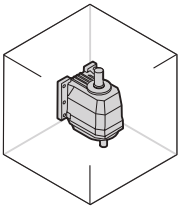
_HS

W = Default

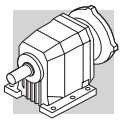

C ... F C ... U C ... UF

B5

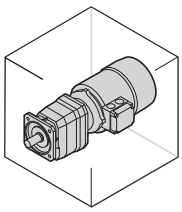

_S

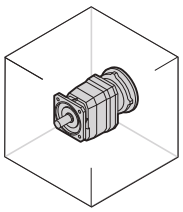

_P(IEC) _SK / _SC

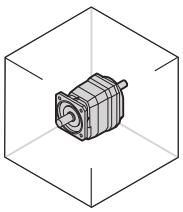

_HS

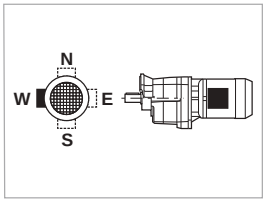

B51

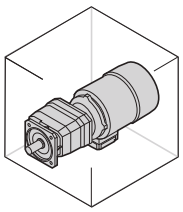

_S

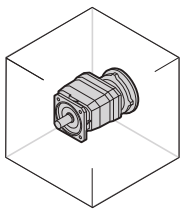

_P(IEC) _SK / _SC

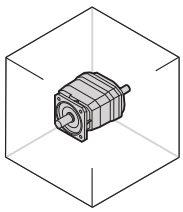

_HS

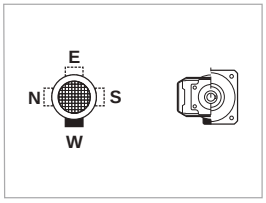

B53

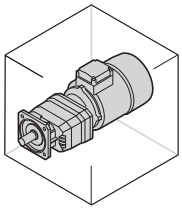

_S

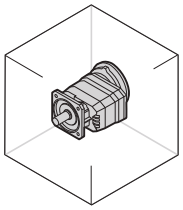

_P(IEC) _SK / _SC

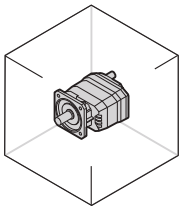

_HS

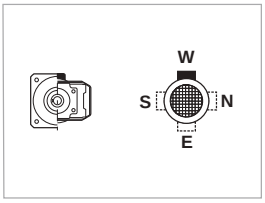

B52

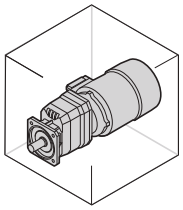

_S

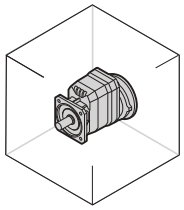

_P(IEC) _SK / _SC

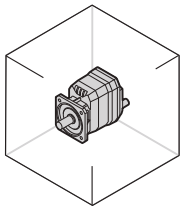

_HS

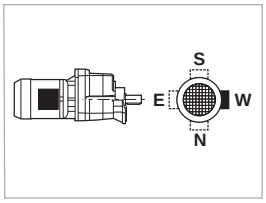

V1

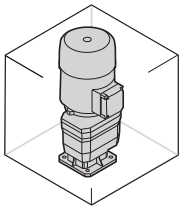

_S

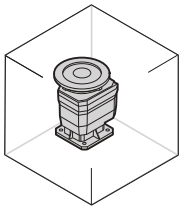

_P(IEC) _SK / _SC

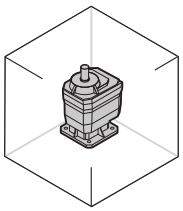

_HS

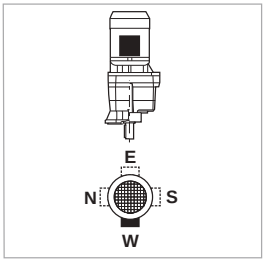

V3

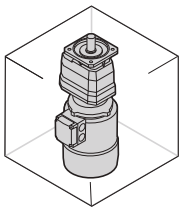

_S

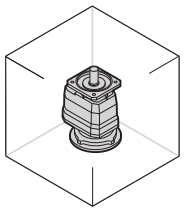

_P(IEC) _SK / _SC

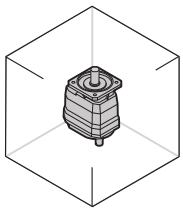

_HS

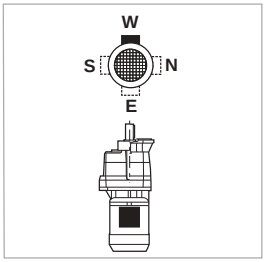

W = Default

Bonfiglioli Riduttori

23 OVERHUNG LOADS

External transmissions keyed onto input and/or output shaft generate loads that act radially onto same shaft.
Resulting shaft loading must be compatible with both the bearing and the shaft capacity. Namely shaft loading (R_{c1} for input shaft, R_{c2} for output shaft), must be equal or lower than admissible overhung load capacity for shaft under study (R_{n1} for input shaft, R_{n2} for output shaft). OHL capability listed in the rating chart section.
In the formulas given below, index (1) applies to parameters relating to input shaft, whereas index (2) refers to output shaft.
The load generated by an external transmission can be calculated with close approximation by the following equations:

$$R_{c1}[N] = \frac{2000 \cdot M_1[Nm] \cdot K_r}{d\,[mm]} \quad ; \quad R_{c2}[N] = \frac{2000 \cdot M_2[Nm] \cdot K_r}{d\,[mm]} \qquad (15)$$

(B 18)

M_1 [Nm]	Torque applied to input shaft
M_2 [Nm]	Torque drawn at output shaft
d [mm]	Pitch diameter of element keyed onto shaft
K_r = 1	Chain transmission

K_r = 1,25	Gear transmission
K_r = 1,5	V-belt transmission
K_r = 2,0	Flat belt transmission

Verification of OHL capability varies depending on whether load applies at midpoint of shaft or it is shifted further out:

(B 19)

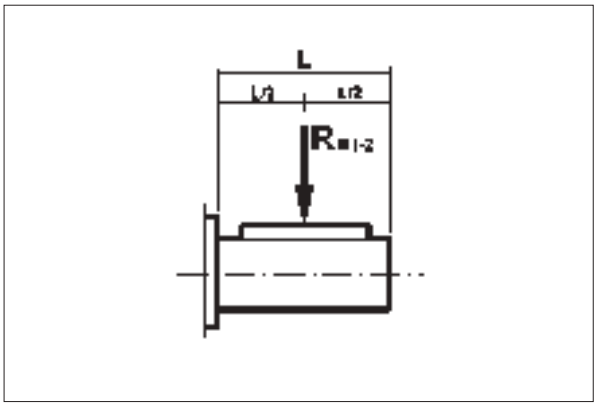

(B 20)

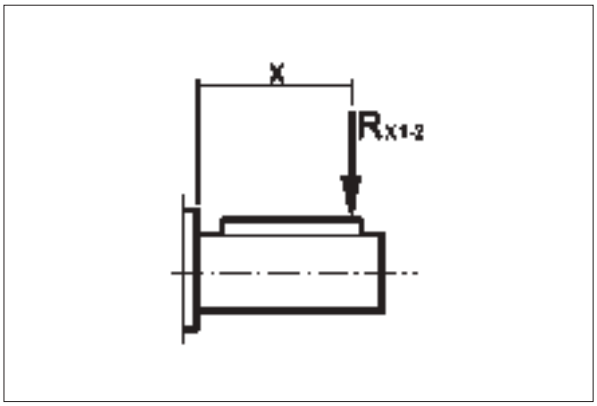

a) Load applied at midpoint of shaft, tab. (B19)

A comparison of shaft loading with catalogue OHL ratings should verify the following condition:

$R_{c1} \leq R_{n1}$ [input shaft]

or

$R_{c2} \leq R_{n2}$ [output shaft]

b) Load off the midpoint tab. (B20)

When load is shifted at an “x” distance from shaft shoulder, permissible load must be calculated for that distance.
Revised permissible overhung loads R_{x1} (input) and R_{x2} (output) are calculated respectively from original rated values R_{n1} and R_{n2} through factor:

$$\frac{a}{b+x} \qquad (16)$$

(B 21)

	Load location factors					
	Output shaft			Input shaft		
	a	**b**	**c**	**a**	**b**	**c**
C 05 2	38	18	250	—	—	—
C 12 2	46	26	450	21	1	300
C 22 2	53	28	550	40	20	350
C 22 3	53	28	550	21	1	300
C 32 2	60.5	30.5	750	41.5	21.5	350
C 32 3	60.5	30.5	750	21	1	300
C 36 2 - C 36 3	69.5	34.5	800	51.5	26.5	450
C 36 4	69.5	34.5	800	21	1	300
C 41 2 - C 41 3	69.5	34.5	850	51.5	26.5	450
C 41 4	69.5	34.5	850	40	20	350
C 51 2 - C 51 3	76.5	36.5	900	51.5	26.5	450
C 51 4	76.5	36.5	900	41.5	21.5	350
C 61 2 - C 61 3	95.5	45.5	1000	57.5	27.5	450
C 61 4	95.5	45.5	1000	51.5	26.5	450
C 70 2 - C 70 3	114	54	1200	86	31	1000
C 70 4	114	54	1200	49.5	24.5	450
C 80 2 - C 80 3	131	61	1500	86	31	1000
C 80 4	131	61	1500	49.5	24.5	450
C 90 2 - C 90 3	161	76	2000	116	46	1400
C 90 4	161	76	2000	49.5	24.5	450
C 100 2 - C 100 3	163.5	58.5	2500	116	46	1400
C 100 4	163.5	58.5	2500	49.5	24.5	450

Verification procedure is described here after.

INPUT SHAFT

1. Calculate:

$$R_{x1} = R_{n1} \cdot \frac{a}{b+x} \qquad (17)$$

N.B. Subject to condition:

$$\frac{L}{2} \leq x \leq c \qquad (18)$$

Finally, the following condition must be verified:

$$R_{c1} \leq R_{x1} \qquad (19)$$

OUTPUT SHAFT

1. Calculate:

$$R_{x2} = R_{n2} \cdot \frac{a}{b+x} \qquad (20)$$

N.B. Subject to condition:

$$\frac{L}{2} \leq x \leq c \qquad (21)$$

Finally, the following condition must be verified:

$$R_{c2} \leq R_{x2} \qquad (22)$$

24 THRUST LOADS, A_{n1}, A_{n2}

Permissible thrust loads on input [A_{n1}] and output [A_{n2}] shafts are obtained from the radial loading for the shaft under consideration [R_{n1}] and [R_{n2}] through the following equation:

$$A_{n1} = R_{n1} \cdot 0.2$$
$$A_{n2} = R_{n2} \cdot 0.2 \qquad (23)$$

The thrust loads calculated through these formulas apply to thrust forces occurring at the same time as rated radial loads.
In the only case that no overhung load acts on the shaft the value of the admissible thrust load [A_n] amounts to 50% of rated OHL [R_n] on same shaft.
Where thrust loads exceed permissible value or largely prevail over radial loads, contact Bonfiglioli Riduttori for an in-depth analysis of the application.

0.09 kW

n_2 min^{-1}	M_2 Nm	S	i	R_{n2} N			IEC	
1.0	760	0.8	855.5	7000	**C414_855.5 S05 M05A6**	142	**C414_855.5 P63 BN63A6**	143
1.2	654	0.9	735.9	7000	**C414_735.9 S05 M05A6**	142	**C414_735.9 P63 BN63A6**	143
1.3	597	1.0	671.3	7000	**C414_671.3 S05 M05A6**	142	**C414_671.3 P63 BN63A6**	143
1.5	511	0.9	574.7	6500	**C364_574.7 S05 M05A6**	138	**C364_574.7 P63 BN63A6**	139
1.6	483	1.2	543.5	7000	**C414_543.5 S05 M05A6**	142	**C414_543.5 P63 BN63A6**	143
1.9	407	1.1	458.4	6500	**C364_458.4 S05 M05A6**	138	**C364_458.4 P63 BN63A6**	139
2.0	400	1.5	450.2	7000	**C414_450.2 S05 M05A6**	142	**C414_450.2 P63 BN63A6**	143
2.6	301	1.5	341.7	6500	**C364_341.7 S05 M05A6**	138	**C364_341.7 P63 BN63A6**	139
2.6	296	2.0	333.4	7000	**C414_333.4 S05 M05A6**	142	**C414_333.4 P63 BN63A6**	143
3.2	250	1.1	274.7	5500	**C323_274.7 S05 M05A6**	134	**C323_274.7 P63 BN63A6**	135
3.9	205	1.0	225.8	5000	**C223_225.8 S05 M05A6**	130	**C223_225.8 P63 BN63A6**	131
4.1	196	1.5	215.6	5500	**C323_215.6 S05 M05A6**	134	**C323_215.6 P63 BN63A6**	135
4.9	162	1.2	178.5	5000	**C223_178.5 S05 M05A6**	130	**C223_178.5 P63 BN63A6**	131
5.8	138	1.5	151.7	5000	**C223_151.7 S05 M05A6**	130	**C223_151.7 P63 BN63A6**	131
5.9	135	2.2	148.4	5500	**C323_148.4 S05 M05A6**	134	**C323_148.4 P63 BN63A6**	135
7.2	111	1.8	122.2	5000	**C223_122.2 S05 M05A6**	130	**C223_122.2 P63 BN63A6**	131
7.2	111	2.7	122.4	5500	**C323_122.4 S05 M05A6**	134	**C323_122.4 P63 BN63A6**	135
7.9	102	2.0	112.0	5000	**C223_112.0 S05 M05A6**	130	**C223_112.0 P63 BN63A6**	131
8.8	91	2.2	100.2	5000	**C223_100.2 S05 M05A6**	130	**C223_100.2 P63 BN63A6**	131
10.7	75	2.7	82.6	5000	**C223_82.6 S05 M05A6**	130	**C223_82.6 P63 BN63A6**	131
13.3	61	1.5	66.2	2000	**C122_66.2 S05 M05A6**	126	**C122_66.2 P63 BN63A6**	127
16.0	51	1.8	55.2	2000	**C122_55.2 S05 M05A6**	126	**C122_55.2 P63 BN63A6**	127
18.5	44	2.0	47.6	2000	**C122_47.6 S05 M05A6**	126	**C122_47.6 P63 BN63A6**	127
19.7	42	1.1	44.7	1170	**C052_44.7 S05 M05A6**	125		
20.8	39	2.3	42.3	2000	**C122_42.3 S05 M05A6**	126	**C122_42.3 P63 BN63A6**	127
21.8	38	1.2	40.3	1150	**C052_40.3 S05 M05A6**	125		
23.8	34	2.6	37.0	2000	**C122_37.0 S05 M05A6**	126	**C122_37.0 P63 BN63A6**	127
24.2	34	1.3	36.4	1140	**C052_36.4 S05 M05A6**	125		
26.8	31	1.5	32.8	1110	**C052_32.8 S05 M05A6**	125		
26.8	31	2.9	32.8	2000	**C122_32.8 S05 M05A6**	126	**C122_32.8 P63 BN63A6**	127
30	27	1.7	44.7	1170	**C052_44.7 S0 M0B4**	125		
33	25	1.8	40.3	990	**C052_40.3 S0 M0B4**	125		
37	22	2.0	36.4	980	**C052_36.4 S0 M0B4**	125		
41	20	2.3	32.8	960	**C052_32.8 S0 M0B4**	125		
42	19	2.3	21.0	1020	**C052_21.0 S05 M05A6**	125		
50	16	2.7	27.1	930	**C052_27.1 S0 M0B4**	125		
56	15	3.1	15.6	950	**C052_15.6 S05 M05A6**	125		
66	12	6.5	13.4	2000	**C122_13.4 S05 M05A6**	126	**C122_13.4 P63 BN63A6**	127
71	12	3.9	12.5	900	**C052_12.5 S05 M05A6**	125		
74	11	7.0	11.9	2000	**C122_11.9 S05 M05A6**	126	**C122_11.9 P63 BN63A6**	127
78	10	4.3	11.2	880	**C052_11.2 S05 M05A6**	125		
88	9	7.7	10.1	2000	**C122_10.1 S05 M05A6**	126	**C122_10.1 P63 BN63A6**	127

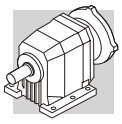

0.09 kW

n_2 min^{-1}	M_2 Nm	S	i	R_{n2} N			IEC	
95	9	5.2	9.3	830	**C052_9.3 S05 M05A6**	125		
100	8	8.4	8.8	2000	**C122_8.8 S05 M05A6**	126	**C122_8.8 P63 BN63A6**	127
119	7	6.5	7.4	780	**C052_7.4 S05 M05A6**	125		
132	6	7.3	6.7	760	**C052_6.7 S05 M05A6**	125		
146	6	10.9	6.2	1960	**C122_6.2 S05 M05A6**	126	**C122_6.2 P63 BN63A6**	127
157	5	11.1	5.6	1850	**C122_5.6 S05 M05A6**	126	**C122_5.6 P63 BN63A6**	127
159	5	8.8	5.5	720	**C052_5.5 S05 M05A6**	125		
187	4	12.6	4.9	1810	**C122_4.9 S05 M05A6**	126	**C122_4.9 P63 BN63A6**	127
205	4	13.0	4.3	1730	**C122_4.3 S05 M05A6**	126	**C122_4.3 P63 BN63A6**	127
249	3	15.0	3.7	1650	**C122_3.7 S05 M05A6**	126	**C122_3.7 P63 BN63A6**	127
275	3	15.4	3.2	1580	**C122_3.2 S05 M05A6**	126	**C122_3.2 P63 BN63A6**	127
329	2	17.3	2.8	1510	**C122_2.8 S05 M05A6**	126	**C122_2.8 P63 BN63A6**	127

0.12 kW

n_2 min^{-1}	M_2 Nm	S	i	R_{n2} N			IEC	
0.98	1061	0.9	884.9	10000			**C514_884.9 P63 BN63B6**	147
1.2	860	1.2	717.7	10000			**C514_717.7 P63 BN63B6**	147
1.5	681	0.9	855.5	7000	**C414_855.5 S05 M05A4**	142	**C414_855.5 P63 BN63A4**	143
1.6	643	1.6	808.0	10000			**C514_808.0 P63 BN63A4**	147
1.7	621	1.0	780.4	7000	**C414_780.4 S05 M05A4**	142	**C414_780.4 P63 BN63A4**	143
1.8	586	1.0	735.9	7000	**C414_735.9 S05 M05A4**	142	**C414_735.9 P63 BN63A4**	143
2.0	534	1.1	671.3	7000	**C414_671.3 S05 M05A4**	142	**C414_671.3 P63 BN63A4**	143
2.0	509	0.9	665.9	6500	**C364_665.9 S05 M05A4**	138	**C364_665.9 P63 BN63A4**	139
2.2	474	1.3	595.8	7000	**C414_595.8 S05 M05A4**	142	**C414_595.8 P63 BN63A4**	143
2.3	440	1.0	574.7	6500	**C364_574.7 S05 M05A4**	138	**C364_574.7 P63 BN63A4**	139
2.4	433	1.4	543.5	7000	**C414_543.5 S05 M05A4**	142	**C414_543.5 P63 BN63A4**	143
2.6	396	1.1	517.2	6500	**C364_517.2 S05 M05A4**	138	**C364_517.2 P63 BN63A4**	139
2.7	393	1.5	493.5	7000	**C414_493.5 S05 M05A4**	142	**C414_493.5 P63 BN63A4**	143
2.9	351	1.3	458.4	6500	**C364_458.4 S05 M05A4**	138	**C364_458.4 P63 BN63A4**	139
2.9	358	1.7	450.2	7000	**C414_450.2 S05 M05A4**	142	**C414_450.2 P63 BN63A4**	143
3.1	333	1.8	418.5	7000	**C414_418.5 S05 M05A4**	142	**C414_418.5 P63 BN63A4**	143
3.2	321	1.4	420.2	6500	**C364_420.2 S05 M05A4**	138	**C364_420.2 P63 BN63A4**	139
3.4	304	2.0	381.8	7000	**C414_381.8 S05 M05A4**	142	**C414_381.8 P63 BN63A4**	143
3.6	289	1.6	377.9	6500	**C364_377.9 S05 M05A4**	138	**C364_377.9 P63 BN63A4**	139
3.9	265	2.3	333.4	7000	**C414_333.4 S05 M05A4**	142	**C414_333.4 P63 BN63A4**	143
4.0	261	1.7	341.7	6500	**C364_341.7 S05 M05A4**	138	**C364_341.7 P63 BN63A4**	139
4.2	244	1.8	318.9	6500	**C364_318.9 S05 M05A4**	138	**C364_318.9 P63 BN63A4**	139
4.3	242	2.5	304.2	7000	**C414_304.2 S05 M05A4**	142	**C414_304.2 P63 BN63A4**	143
4.6	223	2.0	290.9	6500	**C364_290.9 S05 M05A4**	138	**C364_290.9 P63 BN63A4**	139
4.9	219	0.9	178.5	5000	**C223_178.5 S05 M05B6**	130	**C223_178.5 P63 BN63B6**	131
4.9	217	1.2	274.7	5500	**C323_274.7 S05 M05A4**	134	**C323_274.7 P63 BN63A4**	135
5.0	209	2.9	263.0	7000	**C414_263.0 S05 M05A4**	142	**C414_263.0 P63 BN63A4**	143

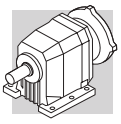

0.12 kW

n_2 min^{-1}	M_2 Nm	S	i	R_{n2} N			IEC	
5.3	195	2.3	255.0	6500	**C364_255.0 S05 M05A4**	138	**C364_255.0 P63 BN63A4**	139
5.5	193	1.3	244.2	5500	**C323_244.2 S05 M05A4**	134	**C323_244.2 P63 BN63A4**	135
5.8	177	2.5	230.9	6500	**C364_230.9 S05 M05A4**	138	**C364_230.9 P63 BN63A4**	139
6.0	178	1.0	225.8	5000	**C223_225.8 S05 M05A4**	130	**C223_225.8 P63 BN63A4**	131
6.3	170	1.8	215.6	5500	**C323_215.6 S05 M05A4**	134	**C323_215.6 P63 BN63A4**	135
6.5	163	2.8	206.4	6500	**C363_206.4 S05 M05A4**	138	**C363_206.4 P63 BN63A4**	139
6.7	159	1.2	200.7	5000	**C223_200.7 S05 M05A4**	130	**C223_200.7 P63 BN63A4**	131
7.3	147	2.0	186.0	5500	**C323_186.0 S05 M05A4**	134	**C323_186.0 P63 BN63A4**	135
7.4	145	3.1	183.5	6500	**C363_183.5 S05 M05A4**	138	**C363_183.5 P63 BN63A4**	139
7.6	141	1.4	178.5	5000	**C223_178.5 S05 M05A4**	130	**C223_178.5 P63 BN63A4**	131
8.1	132	2.3	167.4	5500	**C323_167.4 S05 M05A4**	134	**C323_167.4 P63 BN63A4**	135
8.9	120	1.7	151.7	5000	**C223_151.7 S05 M05A4**	130	**C223_151.7 P63 BN63A4**	131
9.1	117	2.6	148.4	5500	**C323_148.4 S05 M05A4**	134	**C323_148.4 P63 BN63A4**	135
9.9	108	1.9	136.5	5000	**C223_136.5 S05 M05A4**	130	**C223_136.5 P63 BN63A4**	131
9.9	108	2.8	136.0	5500	**C323_136.0 S05 M05A4**	134	**C323_136.0 P63 BN63A4**	135
11.0	97	3.1	122.4	5500	**C323_122.4 S05 M05A4**	134	**C323_122.4 P63 BN63A4**	135
11.0	97	2.1	122.2	5000	**C223_122.2 S05 M05A4**	130	**C223_122.2 P63 BN63A4**	131
12.1	89	2.3	112.0	5000	**C223_112.0 S05 M05A4**	130	**C223_112.0 P63 BN63A4**	131
13.5	79	2.5	100.2	5000	**C223_100.2 S05 M05A4**	130	**C223_100.2 P63 BN63A4**	131
15.3	70	2.9	88.5	5000	**C223_88.5 S05 M05A4**	130	**C223_88.5 P63 BN63A4**	131
16.3	65	3.1	82.6	5000	**C223_82.6 S05 M05A4**	130	**C223_82.6 P63 BN63A4**	131
20.4	53	1.7	66.2	2000	**C122_66.2 S05 M05A4**	126	**C122_66.2 P63 BN63A4**	127
21.3	51	2.5	63.3	5000	**C222_63.3 S05 M05A4**	130	**C222_63.3 P63 BN63A4**	131
24.5	45	2.0	55.2	2000	**C122_55.2 S05 M05A4**	126	**C122_55.2 P63 BN63A4**	127
24.7	44	3.5	54.7	5000	**C222_54.7 S05 M05A4**	130	**C222_54.7 P63 BN63A4**	131
28.4	38	2.3	47.6	2000	**C122_47.6 S05 M05A4**	126	**C122_47.6 P63 BN63A4**	127
29.3	37	1.2	44.7	1010	**C052_44.7 S05 M05A4**	125		
32	34	2.6	42.3	2000	**C122_42.3 S05 M05A4**	126	**C122_42.3 P63 BN63A4**	127
33	34	1.3	40.3	990	**C052_40.3 S05 M05A4**	125		
36	30	1.5	36.4	980	**C052_36.4 S05 M05A4**	125		
36	30	3.0	37.0	2000	**C122_37.0 S05 M05A4**	126	**C122_37.0 P63 BN63A4**	127
40	27	1.6	32.8	960	**C052_32.8 S05 M05A4**	125		
41	26	3.4	32.8	2000	**C122_32.8 S05 M05A4**	126	**C122_32.8 P63 BN63A4**	127
48	23	2.0	27.1	930	**C052_27.1 S05 M05A4**	125		
56	20	2.3	15.6	900	**C052_15.6 S05 M05B6**	125		
62	18	2.6	21.0	890	**C052_21.0 S05 M05A4**	125		
69	16	2.5	18.9	860	**C052_18.9 S05 M05A4**	125		
78	14	3.2	11.2	850	**C052_11.2 S05 M05B6**	125		
84	13	3.1	15.6	820	**C052_15.6 S05 M05A4**	125		
105	10	3.8	12.5	780	**C052_12.5 S05 M05A4**	125		
117	9	4.3	11.2	760	**C052_11.2 S05 M05A4**	125		
130	8	5.4	6.7	740	**C052_6.7 S05 M05B6**	125		
141	8	3.9	9.3	720	**C052_9.3 S05 M05A4**	125		
177	6	4.8	7.4	680	**C052_7.4 S05 M05A4**	125		
196	6	5.4	6.7	660	**C052_6.7 S05 M05A4**	125		

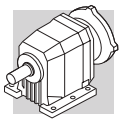

0.18 kW

n_2 min^{-1}	M_2 Nm	S	i	R_{n2} N			IEC	
0.66	2367	1.0	1362	25000			**C704_1362 P71 BN71A6**	155
0.84	1858	1.2	1069	25000			**C704_1069 P71 BN71A6**	155
1.2	1262	1.3	726.3	16000	**C614_726.3 S1 M1SC6**	150	**C614_726.3 P71 BN71A6**	151
1.3	1248	0.8	717.7	10000	**C514_717.7 S1 M1SC6**	146	**C514_717.7 P71 BN71A6**	147
1.5	1049	1.0	884.9	10000			**C514_884.9 P63 BN63B4**	147
1.6	958	1.0	808.0	10000			**C514_808.0 P63 BN63B4**	147
1.6	955	1.0	549.7	10000	**C514_549.7 S1 M1SC6**	146	**C514_549.7 P71 BN71A6**	147
1.8	861	1.9	726.3	16000			**C614_726.3 P63 BN63B4**	151
1.8	851	1.2	717.7	10000			**C514_717.7 P63 BN63B4**	147
1.9	806	1.2	463.9	10000	**C514_463.9 S1 M1SC6**	146	**C514_463.9 P71 BN71A6**	147
1.9	803	2.0	462.0	16000	**C614_462.0 S1 M1SC6**	150	**C614_462.0 P71 BN71A6**	151
2.0	796	0.8	671.3	7000	**C414_671.3 S05 M05B4**	142	**C414_671.3 P63 BN63B4**	143
2.0	783	0.8	450.2	7000	**C414_450.2 S1 M1SC6**	142	**C414_450.2 P71 BN71A6**	143
2.0	777	1.3	655.4	10000			**C514_655.4 P63 BN63B4**	147
2.2	727	0.8	418.5	7000	**C414_418.5 S1 M1SC6**	142	**C414_418.5 P71 BN71A6**	143
2.2	723	1.4	415.7	10000	**C514_415.7 S1 M1SC6**	146	**C514_415.7 P71 BN71A6**	147
2.2	706	0.8	595.8	7000	**C414_595.8 S05 M05B4**	142	**C414_595.8 P63 BN63B4**	143
2.4	660	1.5	379.6	10000	**C514_379.6 S1 M1SC6**	146	**C514_379.6 P71 BN71A6**	147
2.4	644	0.9	543.5	7000	**C414_543.5 S05 M05B4**	142	**C414_543.5 P63 BN63B4**	143
2.6	587	0.8	341.7	6300	**C364_341.7 S1 M1SC6**	138	**C364_341.7 P71 BN71A6**	139
2.7	585	1.0	493.5	7000	**C414_493.5 S05 M05B4**	142	**C414_493.5 P63 BN63B4**	143
2.9	534	1.1	450.2	7000	**C414_450.2 S05 M05B4**	142	**C414_450.2 P63 BN63B4**	143
2.9	536	0.8	458.4	6500	**C364_458.4 S05 M05B4**	138	**C364_458.4 P63 BN63B4**	139
3.1	492	0.9	420.2	6500	**C364_420.2 S05 M05B4**	138	**C364_420.2 P63 BN63B4**	139
3.2	496	1.2	418.5	7000	**C414_418.5 S05 M05B4**	142	**C414_418.5 P63 BN63B4**	143
3.5	452	1.3	381.8	7000	**C414_381.8 S05 M05B4**	142	**C414_381.8 P63 BN63B4**	143
3.5	442	1.0	377.9	6500	**C364_377.9 S05 M05B4**	138	**C364_377.9 P63 BN63B4**	139
3.9	400	1.1	341.7	6500	**C364_341.7 S05 M05B4**	138	**C364_341.7 P63 BN63B4**	139
4.0	395	1.5	333.4	7000	**C414_333.4 S05 M05B4**	142	**C414_333.4 P63 BN63B4**	143
4.1	373	1.2	318.9	6500	**C364_318.9 S05 M05B4**	138	**C364_318.9 P63 BN63B4**	139
4.3	371	1.6	209.1	7000	**C413_209.1 S1 M1SC6**	142	**C413_209.1 P71 BN71A6**	143
4.3	360	1.7	304.2	7000	**C414_304.2 S05 M05B4**	142	**C414_304.2 P63 BN63B4**	143
4.5	340	1.3	290.9	6500	**C364_290.9 S05 M05B4**	138	**C364_290.9 P63 BN63B4**	139
4.7	339	1.8	190.8	7000	**C413_190.8 S1 M1SC6**	142	**C413_190.8 P71 BN71A6**	143
4.8	330	0.9	186.0	5500	**C323_186.0 S1 M1SC6**	134	**C323_186.0 P71 BN71A6**	135
5.0	312	1.9	263.0	7000	**C414_263.0 S05 M05B4**	142	**C414_263.0 P63 BN63B4**	143
5.2	298	1.5	255.0	6500	**C364_255.0 S05 M05B4**	138	**C364_255.0 P63 BN63B4**	139
5.4	297	1.0	167.4	5500	**C323_167.4 S1 M1SC6**	134	**C323_167.4 P71 BN71A6**	135
5.4	295	0.9	244.2	5500	**C323_244.2 S05 M05B4**	134	**C323_244.2 P63 BN63B4**	135
5.7	270	1.7	230.9	6500	**C364_230.9 S05 M05B4**	138	**C364_230.9 P63 BN63B4**	139
6.1	261	1.2	215.6	5500	**C323_215.6 S05 M05B4**	134	**C323_215.6 P63 BN63B4**	135
6.4	250	1.8	206.4	6500	**C363_206.4 S05 M05B4**	138	**C363_206.4 P63 BN63B4**	139
7.1	225	1.3	186.0	5500	**C323_186.0 S05 M05B4**	134	**C323_186.0 P63 BN63B4**	135
7.2	222	2.0	183.5	6500	**C363_183.5 S05 M05B4**	138	**C363_183.5 P63 BN63B4**	139
7.4	216	0.9	178.5	5000	**C223_178.5 S05 M05B4**	130	**C223_178.5 P63 BN63B4**	131
7.9	202	1.5	167.4	5500	**C323_167.4 S05 M05B4**	134	**C323_167.4 P63 BN63B4**	135

Bonfiglioli Riduttori

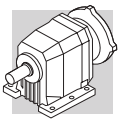

0.18 kW

n_2 min^{-1}	M_2 Nm	S	i	R_{n2} N			IEC	
8.1	196	2.3	162.0	6500	**C363_162.0 S05 M05B4**	138	**C363_162.0 P63 BN63B4**	139
8.7	183	1.1	151.7	5000	**C223_151.7 S05 M05B4**	130	**C223_151.7 P63 BN63B4**	131
8.9	179	1.7	148.4	5500	**C323_148.4 S05 M05B4**	134	**C323_148.4 P63 BN63B4**	135
9.4	169	2.7	139.8	6500	**C363_139.8 S05 M05B4**	138	**C363_139.8 P63 BN63B4**	139
9.7	165	1.2	136.5	5000	**C223_136.5 S05 M05B4**	130	**C223_136.5 P63 BN63B4**	131
9.7	164	1.8	136.0	5500	**C323_136.0 S05 M05B4**	134	**C323_136.0 P63 BN63B4**	135
10.5	152	3.0	125.8	6500	**C363_125.8 S05 M05B4**	138	**C363_125.8 P63 BN63B4**	139
10.8	148	2.0	122.4	5500	**C323_122.4 S05 M05B4**	134	**C323_122.4 P63 BN63B4**	135
10.8	148	1.4	122.2	5000	**C223_122.2 S05 M05B4**	130	**C223_122.2 P63 BN63B4**	131
11.8	135	1.5	112.0	5000	**C223_112.0 S05 M05B4**	130	**C223_112.0 P63 BN63B4**	131
11.8	135	3.3	111.5	6500	**C363_111.5 S05 M05B4**	138	**C363_111.5 P63 BN63B4**	139
11.9	134	2.2	110.6	5500	**C323_110.6 S05 M05B4**	134	**C323_110.6 P63 BN63B4**	135
12.8	125	2.4	103.3	5500	**C323_103.3 S05 M05B4**	134	**C323_103.3 P63 BN63B4**	135
12.9	124	3.6	102.2	6500	**C363_102.2 S05 M05B4**	138	**C363_102.2 P63 BN63B4**	139
13.2	121	1.7	100.2	5000	**C223_100.2 S05 M05B4**	130	**C223_100.2 P63 BN63B4**	131
14.0	114	2.6	94.2	5500	**C323_94.2 S05 M05B4**	134	**C323_94.2 P63 BN63B4**	135
14.9	107	1.9	88.5	5000	**C223_88.5 S05 M05B4**	130	**C223_88.5 P63 BN63B4**	131
16.0	100	2.0	82.6	5000	**C223_82.6 S05 M05B4**	130	**C223_82.6 P63 BN63B4**	131
16.0	100	3.0	82.6	5500	**C323_82.6 S05 M05B4**	134	**C323_82.6 P63 BN63B4**	135
17.6	90	2.2	74.8	5000	**C223_74.8 S05 M05B4**	130	**C223_74.8 P63 BN63B4**	131
17.7	90	3.2	74.7	5500	**C323_74.7 S05 M05B4**	134	**C323_74.7 P63 BN63B4**	135
19.8	83	2.6	66.8	5500	**C322_66.8 S05 M05B4**	134	**C322_66.8 P63 BN63B4**	135
20.0	82	1.1	66.2	2000	**C122_66.2 S05 M05B4**	126	**C122_66.2 P63 BN63B4**	127
20.2	79	2.5	65.3	5000	**C223_65.3 S05 M05B4**	130	**C223_65.3 P63 BN63B4**	131
20.9	78	1.7	63.3	5000	**C222_63.3 S05 M05B4**	130	**C222_63.3 P63 BN63B4**	131
22.0	73	2.6	60.0	5000	**C223_60.0 S05 M05B4**	130	**C223_60.0 P63 BN63B4**	131
22.2	73	2.9	59.4	5500	**C322_59.4 S05 M05B4**	134	**C322_59.4 P63 BN63B4**	135
23.9	68	1.3	55.2	2000	**C122_55.2 S05 M05B4**	126	**C122_55.2 P63 BN63B4**	127
24.1	68	2.3	54.7	5000	**C222_54.7 S05 M05B4**	130	**C222_54.7 P63 BN63B4**	131
27.1	60	2.6	48.6	5000	**C222_48.6 S05 M05B4**	130	**C222_48.6 P63 BN63B4**	131
27.7	59	1.5	47.6	2000	**C122_47.6 S05 M05B4**	126	**C122_47.6 P63 BN63B4**	127
31	53	3.6	43.3	5000	**C222_43.3 S05 M05B4**	130	**C222_43.3 P63 BN63B4**	131
31	52	1.7	42.3	2000	**C122_42.3 S05 M05B4**	126	**C122_42.3 P63 BN63B4**	127
33	50	0.9	40.3	850	**C052_40.3 S05 M05B4**	125		
36	45	1.0	36.4	850	**C052_36.4 S05 M05B4**	125		
36	46	2.0	37.0	2000	**C122_37.0 S05 M05B4**	126	**C122_37.0 P63 BN63B4**	127
40	40	2.2	32.8	2000	**C122_32.8 S05 M05B4**	126	**C122_32.8 P63 BN63B4**	127
40	41	1.1	32.8	840	**C052_32.8 S05 M05B4**	125		
45	36	2.5	29.5	2000	**C122_29.5 S05 M05B4**	126	**C122_29.5 P63 BN63B4**	127
49	34	1.3	27.1	820	**C052_27.1 S05 M05B4**	125		
52	31	2.8	25.4	2000	**C122_25.4 S05 M05B4**	126	**C122_25.4 P63 BN63B4**	127
57	29	3.0	23.2	2000	**C122_23.2 S05 M05B4**	126	**C122_23.2 P63 BN63B4**	127
63	26	1.7	21.0	810	**C052_21.0 S05 M05B4**	125		
64	25	3.2	20.6	2000	**C122_20.6 S05 M05B4**	126	**C122_20.6 P63 BN63B4**	127
70	23	1.7	18.9	790	**C052_18.9 S05 M05B4**	125		
72	23	3.4	18.4	2000	**C122_18.4 S05 M05B4**	126	**C122_18.4 P63 BN63B4**	127

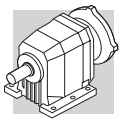

0.18 kW

n_2 min^{-1}	M_2 Nm	S	i	R_{n2} N			IEC	
77	21	3.6	17.2	2000	**C122_17.2 S05 M05B4**	126	**C122_17.2 P63 BN63B4**	127
85	19	2.1	15.6	760	**C052_15.6 S05 M05B4**	125		
106	15	2.6	12.5	740	**C052_12.5 S05 M05B4**	125		
118	14	2.9	11.2	720	**C052_11.2 S05 M05B4**	125		
142	11	2.6	9.3	690	**C052_9.3 S05 M05B4**	125		
178	9	3.3	7.4	650	**C052_7.4 S05 M05B4**	125		
197	8	3.6	6.7	640	**C052_6.7 S05 M05B4**	125		
229	7	7.4	11.9	1670	**C122_11.9 S05 M05A2**	126	**C122_11.9 P63 BN63A2**	127
240	7	4.4	5.5	600	**C052_5.5 S05 M05B4**	125		
268	6	8.1	10.1	1600	**C122_10.1 S05 M05A2**	126	**C122_10.1 P63 BN63A2**	127
310	5	8.9	8.8	1530	**C122_8.8 S05 M05A2**	126	**C122_8.8 P63 BN63A2**	127
354	5	9.8	7.6	1470	**C122_7.6 S05 M05A2**	126	**C122_7.6 P63 BN63A2**	127
440	4	11.3	6.2	1390	**C122_6.2 S05 M05A2**	126	**C122_6.2 P63 BN63A2**	127
488	3	11.9	5.6	1300	**C122_5.6 S05 M05A2**	126	**C122_5.6 P63 BN63A2**	127
577	3	13.4	4.9	1250	**C122_4.9 S05 M05A2**	126	**C122_4.9 P63 BN63A2**	127
635	3	14.0	4.3	1190	**C122_4.3 S05 M05A2**	126	**C122_4.3 P63 BN63A2**	127
770	2	16.0	3.7	1140	**C122_3.7 S05 M05A2**	126	**C122_3.7 P63 BN63A2**	127
853	2	16.7	3.2	1090	**C122_3.2 S05 M05A2**	126	**C122_3.2 P63 BN63A2**	127
1015	2	18.7	2.8	1040	**C122_2.8 S05 M05A2**	126	**C122_2.8 P63 BN63A2**	127

0.25 kW

n_2 min^{-1}	M_2 Nm	S	i	R_{n2} N			IEC	
0.61	3575	1.1	1481	35000			**C804_1481 P71 BN71B6**	158
0.77	2820	1.4	1168	35000			**C804_1168 P71 BN71B6**	158
1.2	1753	0.9	726.3	16000	**C614_726.3 S1 M1SD6**	150	**C614_726.3 P71 BN71B6**	151
1.6	1330	0.8	808.0	10000			**C514_808.0 P63 BN63C4**	147
1.6	1327	0.8	549.7	10000	**C514_549.7 S1 M1SD6**	146	**C514_549.7 P71 BN71B6**	147
1.9	1134	0.9	717.7	10000			**C514_717.7 P71 BN71A4**	147
1.9	1120	0.9	463.9	10000	**C514_463.9 S1 M1SD6**	146	**C514_463.9 P71 BN71B6**	147
2.0	1101	1.5	668.8	16000			**C614_668.8 P63 BN63C4**	151
2.4	894	1.8	370.1	16000	**C614_370.1 S1 M1SD6**	150	**C614_370.1 P71 BN71B6**	151
2.5	869	1.2	549.7	10000			**C514_549.7 P71 BN71A4**	147
2.9	741	0.8	450.2	7000	**C414_450.2 S05 M05C4**	142	**C414_450.2 P71 BN71A4**	143
3.2	689	0.9	418.5	7000	**C414_418.5 S05 M05C4**	142	**C414_418.5 P71 BN71A4**	143
3.2	684	1.5	415.7	10000			**C514_415.7 P71 BN71A4**	147
3.5	628	1.0	381.8	7000	**C414_381.8 S05 M05C4**	142	**C414_381.8 P71 BN71A4**	143
3.5	625	1.6	379.6	10000			**C514_379.6 P71 BN71A4**	147
3.8	567	0.8	344.3	6500	**C364_344.3 S05 M05C4**	138	**C364_344.3 P71 BN71A4**	139
4.0	549	1.1	333.4	7000	**C414_333.4 S05 M05C4**	142	**C414_333.4 P71 BN71A4**	143
4.0	537	1.9	326.1	10000			**C514_326.1 P71 BN71A4**	147
4.2	511	0.9	318.9	6500	**C364_318.9 S05 M05C4**	138	**C364_318.9 P71 BN71A4**	139
4.3	501	1.2	304.2	7000	**C414_304.2 S05 M05C4**	142	**C414_304.2 P71 BN71A4**	143
4.4	490	2.0	297.8	10000			**C514_297.8 P71 BN71A4**	147
4.6	466	1.0	290.9	6500	**C364_290.9 S05 M05C4**	138	**C364_290.9 P71 BN71A4**	139

0.25 kW

n_2 min^{-1}	M_2 Nm	S	i	R_{n2} N			IEC	
5.0	434	2.3	263.8	10000			**C514_263.8 P71 BN71A4**	147
5.0	433	1.4	263.0	7000	**C414_263.0 S05 M05C4**	142	**C414_263.0 P71 BN71A4**	143
5.3	409	1.1	255.0	6500	**C364_255.0 S05 M05C4**	138	**C364_255.0 P71 BN71A4**	139
5.5	395	1.5	239.9	7000	**C414_239.9 S05 M05C4**	142	**C414_239.9 P71 BN71A4**	143
5.8	370	1.2	230.9	6500	**C364_230.9 S05 M05C4**	138	**C364_230.9 P71 BN71A4**	139
6.3	350	2.9	216.7	10000			**C513_216.7 P71 BN71A4**	147
6.5	342	1.3	206.4	6500	**C363_206.4 S05 M05C4**	138	**C363_206.4 P71 BN71A4**	139
7.2	308	1.9	190.8	7000			**C413_190.8 P71 BN71A4**	143
7.2	308	1.0	186.0	5500	**C323_186.0 S05 M05C4**	134	**C323_186.0 P71 BN71A4**	135
7.3	304	1.5	183.5	6500	**C363_183.5 S05 M05C4**	138	**C363_183.5 P71 BN71A4**	139
8.0	277	1.1	167.4	5500	**C323_167.4 S05 M05C4**	134	**C323_167.4 P71 BN71A4**	135
8.3	268	1.7	162.0	6500	**C363_162.0 S05 M05C4**	138	**C363_162.0 P71 BN71A4**	139
8.4	265	2.3	164.1	7000			**C413_164.1 P71 BN71A4**	143
9.0	246	1.2	148.4	5500	**C323_148.4 S05 M05C4**	134	**C323_148.4 P71 BN71A4**	135
9.6	231	1.9	139.8	6500	**C363_139.8 S05 M05C4**	138	**C363_139.8 P71 BN71A4**	139
9.8	226	0.9	136.5	5000	**C223_136.5 S05 M05C4**	130	**C223_136.5 P71 BN71A4**	131
9.9	225	1.3	136.0	5500	**C323_136.0 S05 M05C4**	134	**C323_136.0 P71 BN71A4**	135
10.3	215	2.8	132.9	7000			**C413_132.9 P71 BN71A4**	143
10.7	208	2.2	125.8	6500	**C363_125.8 S05 M05C4**	138	**C363_125.8 P71 BN71A4**	139
11.0	203	1.5	122.4	5500	**C323_122.4 S05 M05C4**	134	**C323_122.4 P71 BN71A4**	135
11.0	202	1.0	122.2	5000	**C223_122.2 S05 M05C4**	130	**C223_122.2 P71 BN71A4**	131
12.0	185	1.1	112.0	5000	**C223_112.0 S05 M05C4**	130	**C223_112.0 P71 BN71A4**	131
12.0	185	2.4	111.5	6500	**C363_111.5 S05 M05C4**	138	**C363_111.5 P71 BN71A4**	139
12.1	183	1.6	110.6	5500	**C323_110.6 S05 M05C4**	134	**C323_110.6 P71 BN71A4**	135
13.0	171	1.8	103.3	5500	**C323_103.3 S05 M05C4**	134	**C323_103.3 P71 BN71A4**	135
13.1	169	2.7	102.2	6500	**C363_102.2 S05 M05C4**	138	**C363_102.2 P71 BN71A4**	139
13.4	166	1.2	100.2	5000	**C223_100.2 S05 M05C4**	130	**C223_100.2 P71 BN71A4**	131
14.2	156	1.9	94.2	5500	**C323_94.2 S05 M05C4**	134	**C323_94.2 P71 BN71A4**	135
14.6	152	3.0	91.9	6500	**C363_91.9 S05 M05C4**	138	**C363_91.9 P71 BN71A4**	139
15.1	147	1.4	88.5	5000	**C223_88.5 S05 M05C4**	130	**C223_88.5 P71 BN71A4**	131
16.2	137	1.5	82.6	5000	**C223_82.6 S05 M05C4**	130	**C223_82.6 P71 BN71A4**	131
16.2	137	2.2	82.6	5500	**C323_82.6 S05 M05C4**	134	**C323_82.6 P71 BN71A4**	135
17.9	124	1.6	74.8	5000	**C223_74.8 S05 M05C4**	130	**C223_74.8 P71 BN71A4**	131
17.9	124	2.3	74.7	5500	**C323_74.7 S05 M05C4**	134	**C323_74.7 P71 BN71A4**	135
20.1	113	1.9	66.8	5500	**C322_66.8 S05 M05C4**	134	**C322_66.8 P71 BN71A4**	135
20.3	112	0.8	66.2	2000	**C122_66.2 S05 M05C4**	126	**C122_66.2 P71 BN71A4**	127
20.5	108	1.8	65.3	5000	**C223_65.3 S05 M05C4**	130	**C223_65.3 P71 BN71A4**	131
21.2	107	1.2	63.3	5000	**C222_63.3 S05 M05C4**	130	**C222_63.3 P71 BN71A4**	131
22.3	99	1.9	60.0	5000	**C223_60.0 S05 M05C4**	130	**C223_60.0 P71 BN71A4**	131
22.6	100	2.1	59.4	5500	**C322_59.4 S05 M05C4**	134	**C322_59.4 P71 BN71A4**	135
24.3	93	1.0	55.2	2000	**C122_55.2 S05 M05C4**	126	**C122_55.2 P71 BN71A4**	127
24.5	93	1.7	54.7	5000	**C222_54.7 S05 M05C4**	130	**C222_54.7 P71 BN71A4**	131
25.6	89	3.4	52.4	5500	**C322_52.4 S05 M05C4**	134	**C322_52.4 P71 BN71A4**	135
27.5	82	1.9	48.6	5000	**C222_48.6 S05 M05C4**	130	**C222_48.6 P71 BN71A4**	131
28.1	80	1.1	47.6	2000	**C122_47.6 S05 M05C4**	126	**C122_47.6 P71 BN71A4**	127
31	73	2.6	43.3	4750	**C222_43.3 S05 M05C4**	130	**C222_43.3 P71 BN71A4**	131
32	72	1.3	42.3	2000	**C122_42.3 S05 M05C4**	126	**C122_42.3 P71 BN71A4**	127
36	63	1.4	37.0	2000	**C122_37.0 S05 M05C4**	126	**C122_37.0 P71 BN71A4**	127

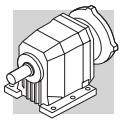

0.25 kW

n_2 min^{-1}	M_2 Nm	S	i	R_{n2} N			IEC	
36	62	3.2	36.8	4540	**C222_36.8 S05 M05C4**	130	**C222_36.8 P71 BN71A4**	131
40	56	3.6	33.1	4500	**C222_33.1 S05 M05C4**	130	**C222_33.1 P71 BN71A4**	131
41	55	1.6	32.8	2000	**C122_32.8 S05 M05C4**	126	**C122_32.8 P71 BN71A4**	127
45	50	1.8	29.5	2000	**C122_29.5 S05 M05C4**	126	**C122_29.5 P71 BN71A4**	127
49	47	1.0	27.1	700	**C052_27.1 S05 M05C4**	125		
53	43	2.1	25.4	2000	**C122_25.4 S05 M05C4**	126	**C122_25.4 P71 BN71A4**	127
58	39	2.2	23.2	2000	**C122_23.2 S05 M05C4**	126	**C122_23.2 P71 BN71A4**	127
63	36	1.2	21.0	720	**C052_21.0 S05 M05C4**	125		
65	35	2.4	20.6	2000	**C122_20.6 S05 M05C4**	126	**C122_20.6 P71 BN71A4**	127
70	33	1.2	18.9	710	**C052_18.9 S05 M05C4**	125		
73	31	2.5	18.4	2000	**C122_18.4 S05 M05C4**	126	**C122_18.4 P71 BN71A4**	127
78	29	2.6	17.2	2000	**C122_17.2 S05 M05C4**	126	**C122_17.2 P71 BN71A4**	127
85	27	1.5	15.6	700	**C052_15.6 S05 M05C4**	125		
87	26	2.8	15.4	2000	**C122_15.4 S05 M05C4**	126	**C122_15.4 P71 BN71A4**	127
100	23	3.1	13.4	2000	**C122_13.4 S05 M05C4**	126	**C122_13.4 P71 BN71A4**	127
106	22	1.9	12.5	690	**C052_12.5 S05 M05C4**	125		
113	20	3.3	11.9	2000	**C122_11.9 S05 M05C4**	126	**C122_11.9 P71 BN71A4**	127
118	19	2.1	11.2	670	**C052_11.2 S05 M05C4**	125		
133	17	3.7	10.1	1980	**C122_10.1 S05 M05C4**	126	**C122_10.1 P71 BN71A4**	127
142	16	1.9	9.3	650	**C052_9.3 S05 M05C4**	125		
157	14	4.2	17.2	1870	**C122_17.2 S05 M05B2**	126	**C122_17.2 P63 BN63B2**	127
178	13	2.4	7.4	620	**C052_7.4 S05 M05C4**	125		
197	12	2.6	6.7	610	**C052_6.7 S05 M05C4**	125		
204	11	5.0	13.4	1710	**C122_13.4 S05 M05B2**	126	**C122_13.4 P63 BN63B2**	127
230	10	5.4	11.9	1660	**C122_11.9 S05 M05B2**	126	**C122_11.9 P63 BN63B2**	127
240	9	3.2	5.5	580	**C052_5.5 S05 M05C4**	125		
268	8	5.8	10.1	1590	**C122_10.1 S05 M05B2**	126	**C122_10.1 P63 BN63B2**	127
311	7	6.5	8.8	1510	**C122_8.8 S05 M05B2**	126	**C122_8.8 P63 BN63B2**	127
354	6	7.0	7.6	1460	**C122_7.6 S05 M05B2**	126	**C122_7.6 P63 BN63B2**	127
442	5	8.2	6.2	1350	**C122_6.2 S05 M05B2**	126	**C122_6.2 P63 BN63B2**	127
489	5	8.6	5.6	1290	**C122_5.6 S05 M05B2**	126	**C122_5.6 P63 BN63B2**	127
577	4	9.7	4.9	1240	**C122_4.9 S05 M05B2**	126	**C122_4.9 P63 BN63B2**	127
637	4	10.1	4.3	1180	**C122_4.3 S05 M05B2**	126	**C122_4.3 P63 BN63B2**	127
770	3	11.5	3.7	1130	**C122_3.7 S05 M05B2**	126	**C122_3.7 P63 BN63B2**	127
856	3	12.1	3.2	1080	**C122_3.2 S05 M05B2**	126	**C122_3.2 P63 BN63B2**	127
979	2	13.0	2.8	1030	**C122_2.8 S05 M05B2**	126	**C122_2.8 P63 BN63B2**	127

0.37 kW

n_2 min^{-1}	M_2 Nm	S	i	R_{n2} N			IEC	
0.73	4382	1.6	1240	60000	**C904_1240 S1 M1LA6**	160	**C904_1240 P80 BN80A6**	161
0.78	4127	1.0	1168	35000			**C804_1168 P80 BN80A6**	158
0.93	3476	1.2	1481	35000			**C804_1481 P71 BN71B4**	158
1.2	2741	1.5	1168	35000			**C804_1168 P71 BN71B4**	158
1.4	2220	1.8	945.7	35000			**C804_945.7 P71 BN71B4**	158
1.5	2165	1.1	922.6	25000			**C704_922.6 P71 BN71B4**	155

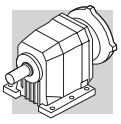

0.37 kW

n_2 min^{-1}	M_2 Nm	S	i	R_{n2} N			IEC	
1.7	1869	0.9	796.1	16000	**C614_796.1 S1 M1SD4**	150	**C614_796.1 P71 BN71B4**	151
2.0	1570	1.0	668.8	16000	**C614_668.8 S1 M1SD4**	150	**C614_668.8 P71 BN71B4**	151
2.1	1543	1.5	657.3	25000			**C704_657.3 P71 BN71B4**	155
2.4	1341	1.2	571.2	16000	**C614_571.2 S1 M1SD4**	150	**C614_571.2 P71 BN71B4**	151
2.5	1302	1.8	554.7	25000			**C704_554.7 P71 BN71B4**	155
2.5	1290	0.8	549.7	10000	**C514_549.7 S1 M1SD4**	146	**C514_549.7 P71 BN71B4**	147
2.6	1223	1.3	521.1	16000	**C614_521.1 S1 M1SD4**	150	**C614_521.1 P71 BN71B4**	151
3.3	989	1.6	421.5	16000	**C614_421.5 S1 M1SD4**	150	**C614_421.5 P71 BN71B4**	151
3.3	976	1.0	415.7	10000	**C514_415.7 S1 M1SD4**	146	**C514_415.7 P71 BN71B4**	147
3.3	961	2.4	409.4	25000			**C704_409.4 P71 BN71B4**	155
3.6	891	1.1	379.6	10000	**C514_379.6 S1 M1SD4**	146	**C514_379.6 P71 BN71B4**	147
3.7	869	1.8	370.1	16000	**C614_370.1 S1 M1SD4**	150	**C614_370.1 P71 BN71B4**	151
4.1	793	2.0	337.7	16000	**C614_337.7 S1 M1SD4**	150	**C614_337.7 P71 BN71B4**	151
4.1	783	0.8	333.4	7000	**C414_333.4 S1 M1SD4**	142	**C414_333.4 P71 BN71B4**	143
4.2	765	1.3	326.1	10000	**C514_326.1 S1 M1SD4**	146	**C514_326.1 P71 BN71B4**	147
4.6	699	1.4	297.8	10000	**C514_297.8 S1 M1SD4**	146	**C514_297.8 P71 BN71B4**	147
5.2	619	1.6	263.8	10000	**C514_263.8 S1 M1SD4**	146	**C514_263.8 P71 BN71B4**	147
5.2	617	1.0	263.0	7000	**C414_263.0 S1 M1SD4**	142	**C414_263.0 P71 BN71B4**	143
5.9	540	0.8	230.9	6300	**C364_230.9 S1 M1SD4**	138	**C364_230.9 P71 BN71B4**	139
6.3	520	1.9	216.7	10000	**C513_216.7 S1 M1SD4**	146	**C513_216.7 P71 BN71B4**	147
6.6	502	1.2	209.1	7000	**C413_209.1 S1 M1SD4**	142	**C413_209.1 P71 BN71B4**	143
6.6	499	0.9	206.4	6500			**C363_206.4 P71 BN71B4**	139
6.9	475	2.1	197.9	10000	**C513_197.9 S1 M1SD4**	146	**C513_197.9 P71 BN71B4**	147
7.2	458	1.3	190.8	7000	**C413_190.8 S1 M1SD4**	142	**C413_190.8 P71 BN71B4**	143
7.5	444	1.0	183.5	6500			**C363_183.5 P71 BN71B4**	139
7.6	431	1.4	179.9	7000	**C413_179.9 S1 M1SD4**	142	**C413_179.9 P71 BN71B4**	143
7.8	422	2.4	175.8	10000	**C513_175.8 S1 M1SD4**	146	**C513_175.8 P71 BN71B4**	147
8.3	394	1.5	164.1	7000	**C413_164.1 S1 M1SD4**	142	**C413_164.1 P71 BN71B4**	143
8.5	385	2.6	160.5	10000	**C513_160.5 S1 M1SD4**	146	**C513_160.5 P71 BN71B4**	147
8.5	392	1.1	162.0	6500	**C363_162.0 S1 M1SD4**	138	**C363_162.0 P71 BN71B4**	139
9.4	349	1.7	145.6	7000	**C413_145.6 S1 M1SD4**	142	**C413_145.6 P71 BN71B4**	143
9.8	338	1.3	139.8	6500	**C363_139.8 S1 M1SD4**	138	**C363_139.8 P71 BN71B4**	139
10.1	329	0.9	136.0	5500	**C323_136.0 S1 M1SD4**	134	**C323_136.0 P71 BN71B4**	135
10.3	319	1.9	132.9	7000	**C413_132.9 S1 M1SD4**	142	**C413_132.9 P71 BN71B4**	143
10.9	304	1.5	125.8	6500	**C363_125.8 S1 M1SD4**	138	**C363_125.8 P71 BN71B4**	139
11.2	296	1.0	122.4	5500	**C323_122.4 S1 M1SD4**	134	**C323_122.4 P71 BN71B4**	135
11.4	289	2.1	120.6	7000	**C413_120.6 S1 M1SD4**	142	**C413_120.6 P71 BN71B4**	143
12.3	270	1.7	111.5	6500	**C363_111.5 S1 M1SD4**	138	**C363_111.5 P71 BN71B4**	139
12.4	264	2.3	110.1	7000	**C413_110.1 S1 M1SD4**	142	**C413_110.1 P71 BN71B4**	143
12.4	267	1.1	110.6	5500	**C323_110.6 S1 M1SD4**	134	**C323_110.6 P71 BN71B4**	135
13.3	250	1.2	103.3	5500	**C323_103.3 S1 M1SD4**	134	**C323_103.3 P71 BN71B4**	135
13.4	245	2.4	102.3	7000	**C413_102.3 S1 M1SD4**	142	**C413_102.3 P71 BN71B4**	143
13.4	247	1.8	102.2	6500	**C363_102.2 S1 M1SD4**	138	**C363_102.2 P71 BN71B4**	139
14.5	228	1.3	94.2	5500	**C323_94.2 S1 M1SD4**	134	**C323_94.2 P71 BN71B4**	135
14.7	224	2.7	93.3	7000	**C413_93.3 S1 M1SD4**	142	**C413_93.3 P71 BN71B4**	143
14.9	222	2.0	91.9	6500	**C363_91.9 S1 M1SD4**	138	**C363_91.9 P71 BN71B4**	139
15.5	214	0.9	88.5	4850	**C223_88.5 S1 M1SD4**	130	**C223_88.5 P71 BN71B4**	131
16.5	201	2.2	83.1	6500	**C363_83.1 S1 M1SD4**	138	**C363_83.1 P71 BN71B4**	139
16.6	200	1.0	82.6	5000	**C223_82.6 S1 M1SD4**	130	**C223_82.6 P71 BN71B4**	131
16.6	200	1.5	82.6	5500	**C323_82.6 S1 M1SD4**	134	**C323_82.6 P71 BN71B4**	135
16.8	196	3.1	81.5	7000	**C413_81.5 S1 M1SD4**	142	**C413_81.5 P71 BN71B4**	143

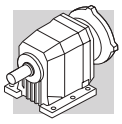

0.37 kW

n_2 min^{-1}	M_2 Nm	S	i	R_{n2} N			IEC	
17.7	188	2.4	77.6	6500	**C363_77.6 S1 M1SD4**	138	**C363_77.6 P71 BN71B4**	139
18.3	181	1.1	74.8	5000	**C223_74.8 S1 M1SD4**	130	**C223_74.8 P71 BN71B4**	131
18.3	181	1.6	74.7	5500	**C323_74.7 S1 M1SD4**	134	**C323_74.7 P71 BN71B4**	135
18.4	178	3.4	74.4	7000	**C413_74.4 S1 M1SD4**	142	**C413_74.4 P71 BN71B4**	143
19.4	171	2.6	70.8	6500	**C363_70.8 S1 M1SD4**	138	**C363_70.8 P71 BN71B4**	139
20.5	165	1.3	66.8	5500			**C322_66.8 P71 BN71B4**	135
21.0	158	1.3	65.3	5000	**C223_65.3 S1 M1SD4**	130	**C223_65.3 P71 BN71B4**	131
21.7	156	0.8	63.3	4850			**C222_63.3 P71 BN71B4**	131
22.1	150	3.0	62.0	6500	**C363_62.0 S1 M1SD4**	138	**C363_62.0 P71 BN71B4**	139
22.8	145	1.3	60.0	5000	**C223_60.0 S1 M1SD4**	130	**C223_60.0 P71 BN71B4**	131
23.1	147	1.5	59.4	5500	**C322_59.4 S1 M1SD4**	134	**C322_59.4 P71 BN71B4**	135
25.0	135	1.1	54.7	5000			**C222_54.7 P71 BN71B4**	131
26.1	130	2.3	52.4	5500	**C322_52.4 S1 M1SD4**	134	**C322_52.4 P71 BN71B4**	135
28.2	120	1.3	48.6	4850		130	**C222_48.6 P71 BN71B4**	131
30	112	2.7	45.3	5500	**C322_45.3 S1 M1SD4**	134	**C322_45.3 P71 BN71B4**	135
32	107	1.8	43.3	4530	**C222_43.3 S1 M1SD4**	130	**C222_43.3 P71 BN71B4**	131
34	101	3.0	40.7	5500	**C322_40.7 S1 M1SD4**	134	**C322_40.7 P71 BN71B4**	135
37	91	1.0	37.0	2000	**C122_37.0 S1 M1SD4**	126	**C122_37.0 P71 BN71B4**	127
37	91	2.2	36.8	4360	**C222_36.8 S1 M1SD4**	130	**C222_36.8 P71 BN71B4**	131
38	89	3.4	36.1	5500	**C322_36.1 S1 M1SD4**	134	**C322_36.1 P71 BN71B4**	135
41	82	2.4	33.1	4240	**C222_33.1 S1 M1SD4**	130	**C222_33.1 P71 BN71B4**	131
42	81	1.1	32.8	2000	**C122_32.8 S1 M1SD4**	126	**C122_32.8 P71 BN71B4**	127
46	73	2.7	29.6	4130	**C222_29.6 S1 M1SD4**	130	**C222_29.6 P71 BN71B4**	131
46	73	1.2	29.5	2000	**C122_29.5 S1 M1SD4**	126	**C122_29.5 P71 BN71B4**	127
50	67	3.0	27.2	4100	**C222_27.2 S1 M1SD4**	130	**C222_27.2 P71 BN71B4**	131
54	63	1.4	25.4	2000	**C122_25.4 S1 M1SD4**	126	**C122_25.4 P71 BN71B4**	127
56	60	3.3	24.3	3920	**C222_24.3 S1 M1SD4**	130	**C222_24.3 P71 BN71B4**	131
59	57	1.5	23.2	2000	**C122_23.2 S1 M1SD4**	126	**C122_23.2 P71 BN71B4**	127
66	51	1.6	20.6	2000	**C122_20.6 S1 M1SD4**	126	**C122_20.6 P71 BN71B4**	127
74	45	1.7	18.4	2000	**C122_18.4 S1 M1SD4**	126	**C122_18.4 P71 BN71B4**	127
80	42	1.8	17.2	2000	**C122_17.2 S1 M1SD4**	126	**C122_17.2 P71 BN71B4**	127
88	39	1.0	15.6	580	**C052_15.6 S1 M1SD4**	125		
89	38	1.9	15.4	2000	**C122_15.4 S1 M1SD4**	126	**C122_15.4 P71 BN71B4**	127
102	33	2.1	13.4	2000	**C122_13.4 S1 M1SD4**	126	**C122_13.4 P71 BN71B4**	127
110	31	1.3	12.5	600	**C052_12.5 S1 M1SD4**	125		
115	29	2.3	11.9	2000	**C122_11.9 S1 M1SD4**	126	**C122_11.9 P71 BN71B4**	127
122	28	1.4	11.2	590	**C052_11.2 S1 M1SD4**	125		
136	25	2.5	10.1	1930	**C122_10.1 S1 M1SD4**	126	**C122_10.1 P71 BN71B4**	127
147	23	1.3	9.3	580	**C052_9.3 S1 M1SD4**	125		
155	22	2.7	8.8	1850	**C122_8.8 S1 M1SD4**	126	**C122_8.8 P71 BN71B4**	127
164	20	2.2	5.5	570	**C052_5.5 S1 M1LA6**	125		
180	19	3.0	7.6	1780	**C122_7.6 S1 M1SD4**	126	**C122_7.6 P71 BN71B4**	127
185	18	1.6	7.4	570	**C052_7.4 S1 M1SD4**	125		
204	17	1.8	6.7	560	**C052_6.7 S1 M1SD4**	125		
220	15	3.4	6.2	1650	**C122_6.2 S1 M1SD4**	126	**C122_6.2 P71 BN71B4**	127
235	14	3.7	11.9	1610	**C122_11.9 S05 M05C2**	126	**C122_11.9 P71 BN71A2**	127
249	14	2.2	5.5	540	**C052_5.5 S1 M1SD4**	125		
273	12	4.0	10.1	1570	**C122_10.1 S05 M05C2**	126	**C122_10.1 P71 BN71A2**	127
318	11	4.5	8.8	1500	**C122_8.8 S05 M05C2**	126	**C122_8.8 P71 BN71A2**	127
361	9	4.8	7.6	1440	**C122_7.6 S05 M05C2**	126	**C122_7.6 P71 BN71A2**	127
452	7	5.7	6.2	1350	**C122_6.2 S05 M05C2**	126	**C122_6.2 P71 BN71A2**	127

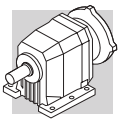

0.37 kW

n_2 min^{-1}	M_2 Nm	S	i	R_{n2} N			IEC	
500	7	6.0	5.6	1290	**C122_5.6 S05 M05C2**	126	**C122_5.6 P71 BN71A2**	127
577	6	6.5	4.9	1230	**C122_4.9 S05 M05C2**	126	**C122_4.9 P71 BN71A2**	127
651	5	7.0	4.3	1180	**C122_3.2 S05 M05C2**	126	**C122_3.2 P71 BN71A2**	127
770	4	7.8	3.7	1120	**C122_3.7 S05 M05C2**	126	**C122_3.7 P71 BN71A2**	127
875	4	8.4	3.2	1080	**C122_3.2 S05 M05C2**	126	**C122_3.2 P71 BN71A2**	127
1015	3	9.1	2.8	1030	**C122_2.8 S05 M05C2**	126	**C122_2.8 P71 BN71A2**	127

0.55 kW

n_2 min^{-1}	M_2 Nm	S	i	R_{n2} N			IEC	
0.74	6442	1.1	1240	60000	**C904_1240 S2 M2SA6**	160	**C904_1240 P80 BN80B6**	161
0.85	5616	2.1	1081	85000	**C1004_1081 S2 M2SA6**	163	**C1004_1081 P80 BN80B6**	164
1.0	4792	1.5	922.3	60000	**C904_922.3 S2 M2SA6**	160	**C904_922.3 P80 BN80B6**	161
1.1	4381	0.9	1274	35000	**C804_1274 S1 M1LA4**	157	**C804_1274 P80 BN80A4**	158
1.1	4295	1.7	1240	60000	**C904_1240 S1 M1LA4**	160	**C904_1240 P80 BN80A4**	161
1.3	3549	1.1	1032	35000	**C804_1032 S1 M1LA4**	157	**C804_1032 P80 BN80A4**	158
1.4	3484	2.1	1006	60000	**C904_1006 S1 M1LA4**	160	**C904_1006 P80 BN80A4**	161
1.6	2939	1.4	854.6	35000	**C804_854.6 S1 M1LA4**	157	**C804_854.6 P80 BN80A4**	158
1.6	2923	2.5	844.0	65000	**C904_844.0 S1 M1LA4**	160	**C904_844.0 P80 BN80A4**	161
1.9	2531	0.9	736.0	25000	**C704_736.0 S1 M1LA4**	154	**C704_736.0 P80 BN80A4**	155
1.9	2492	1.6	724.7	35000	**C804_724.7 S1 M1LA4**	157	**C804_724.7 P80 BN80A4**	158
2.1	2284	1.8	664.3	35000	**C804_664.3 S1 M1LA4**	157	**C804_664.3 P80 BN80A4**	158
2.1	2260	1.0	657.3	25000	**C704_657.3 S1 M1LA4**	154	**C704_657.3 P80 BN80A4**	155
2.4	1978	0.8	571.2	16000	**C614_571.2 S1 M1LA4**	150	**C614_571.2 P80 BN80A4**	151
2.5	1907	1.2	554.7	25000	**C704_554.7 S1 M1LA4**	154	**C704_554.7 P80 BN80A4**	155
2.6	1820	2.2	529.3	35000	**C804_529.3 S1 M1LA4**	157	**C804_529.3 P80 BN80A4**	158
3.0	1600	1.0	462.0	16000	**C614_462.0 S1 M1LA4**	150	**C614_462.0 P80 BN80A4**	151
3.1	1566	2.6	455.4	35000	**C804_455.4 S1 M1LA4**	157	**C804_455.4 P80 BN80A4**	158
3.1	1525	1.5	443.5	25000	**C704_443.5 S1 M1LA4**	154	**C704_443.5 P80 BN80A4**	155
3.3	1460	1.1	421.5	16000	**C614_421.5 S1 M1LA4**	150	**C614_421.5 P80 BN80A4**	151
3.6	1315	0.8	379.6	10000	**C514_379.6 S1 M1LA4**	146	**C514_379.6 P80 BN80A4**	147
3.7	1282	1.2	370.1	16000	**C614_370.1 S1 M1LA4**	150	**C614_370.1 P80 BN80A4**	151
3.8	1254	3.2	364.7	35000	**C804_364.7 S1 M1LA4**	157	**C804_364.7 P80 BN80A4**	158
4.0	1184	1.9	344.3	25000	**C704_344.3 S1 M1LA4**	154	**C704_344.3 P80 BN80A4**	155
4.1	1170	1.4	337.7	16000	**C614_337.7 S1 M1LA4**	150	**C614_337.7 P80 BN80A4**	151
4.2	1130	0.9	326.1	10000	**C514_326.1 S1 M1LA4**	146	**C514_326.1 P80 BN80A4**	147
4.6	1031	1.0	297.8	10000	**C514_297.8 S1 M1LA4**	146	**C514_297.8 P80 BN80A4**	147
5.0	953	1.7	275.3	16000	**C614_275.3 S1 M1LA4**	150	**C614_275.3 P80 BN80A4**	151
5.1	936	2.5	272.2	25000	**C704_272.2 S1 M1LA4**	154	**C704_272.2 P80 BN80A4**	155
5.2	914	1.1	263.8	10000	**C514_263.8 S1 M1LA4**	146	**C514_263.8 P80 BN80A4**	147
5.7	834	1.2	240.9	10000	**C514_240.9 S1 M1LA4**	146	**C514_240.9 P80 BN80A4**	147
5.8	847	2.7	239.3	25000			**C703_239.3 P80 BN80A4**	155
5.8	825	1.9	238.3	16000	**C614_238.3 S1 M1LA4**	150	**C614_238.3 P80 BN80A4**	151
6.2	782	2.9	220.9	25000			**C703_220.9 P80 BN80A4**	155
6.3	753	2.1	217.4	16000	**C614_217.4 S1 M1LA4**	150	**C614_217.4 P80 BN80A4**	151
6.4	767	1.3	216.7	10000	**C513_216.7 S1 M1LA4**	146	**C513_216.7 P80 BN80A4**	147
7.0	700	1.4	197.9	10000	**C513_197.9 S1 M1LA4**	146	**C513_197.9 P80 BN80A4**	147
7.0	693	2.3	195.8	16000			**C613_195.8 P80 BN80A4**	151

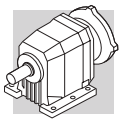

0.55 kW

n_2 min^{-1}	M_2 Nm	S	i	R_{n2} N			IEC	
7.1	687	3.3	194.1	25000			**C703_194.1 P80 BN80A4**	155
7.7	637	0.9	179.9	7000	**C413_179.9 S1 M1LA4**	142	**C413_179.9 P80 BN80A4**	143
7.7	632	2.5	178.6	16000			**C613_178.6 P80 BN80A4**	151
7.9	622	1.6	175.8	10000	**C513_175.8 S1 M1LA4**	146	**C513_175.8 P80 BN80A4**	147
8.4	582	2.7	164.5	16000			**C613_164.5 P80 BN80A4**	151
8.4	581	1.0	164.1	7000	**C413_164.1 S1 M1LA4**	142	**C413_164.1 P80 BN80A4**	143
8.6	568	1.8	160.5	10000	**C513_160.5 S1 M1LA4**	146	**C513_160.5 P80 BN80A4**	147
9.2	531	3.0	150.0	16000			**C613_150.0 P80 BN80A4**	151
9.4	522	1.9	147.4	10000	**C513_147.4 S1 M1LA4**	146	**C513_147.4 P80 BN80A4**	147
9.5	516	1.2	145.6	7000	**C413_145.6 S1 M1LA4**	142	**C413_145.6 P80 BN80A4**	143
9.8	497	3.2	140.5	16000			**C613_140.5 P80 BN80A4**	151
9.9	494	0.9	139.8	6500	**C363_139.8 S1 M1LA4**	138	**C363_139.8 P80 BN80A4**	139
10.3	477	2.1	134.6	10000	**C513_134.6 S1 M1LA4**	146	**C513_134.6 P80 BN80A4**	147
10.4	470	1.3	132.9	7000	**C413_132.9 S1 M1LA4**	142	**C413_132.9 P80 BN80A4**	143
11.0	445	1.0	125.8	6500	**C363_125.8 S1 M1LA4**	138	**C363_125.8 P80 BN80A4**	139
11.1	440	2.3	124.4	10000	**C513_124.4 S1 M1LA4**	146	**C513_124.4 P80 BN80A4**	147
11.4	427	1.4	120.6	7000	**C413_120.6 S1 M1LA4**	142	**C413_120.6 P80 BN80A4**	143
12.1	402	2.5	113.6	10000	**C513_113.6 S1 M1LA4**	146	**C513_113.6 P80 BN80A4**	147
12.4	394	1.1	111.5	6500	**C363_111.5 S1 M1LA4**	138	**C363_111.5 P80 BN80A4**	139
12.5	390	1.5	110.1	7000	**C413_110.1 S1 M1LA4**	142	**C413_110.1 P80 BN80A4**	143
13.5	362	1.7	102.3	7000	**C413_102.3 S1 M1LA4**	142	**C413_102.3 P80 BN80A4**	143
13.5	361	1.2	102.2	6500	**C363_102.2 S1 M1LA4**	138	**C363_102.2 P80 BN80A4**	139
13.6	360	2.8	101.8	10000	**C513_101.8 S1 M1LA4**	146	**C513_101.8 P80 BN80A4**	147
14.7	333	0.9	94.2	5500	**C323_94.2 S1 M1LA4**	134	**C323_94.2 P80 BN80A4**	135
14.8	330	1.8	93.3	7000	**C413_93.3 S1 M1LA4**	142	**C413_93.3 P80 BN80A4**	143
14.8	329	3.0	93.0	10000	**C513_93.0 S1 M1LA4**	146	**C513_93.0 P80 BN80A4**	147
15.0	325	1.4	91.9	6500	**C363_91.9 S1 M1LA4**	138	**C363_91.9 P80 BN80A4**	139
16.6	294	1.5	83.1	6500	**C363_83.1 S1 M1LA4**	138	**C363_83.1 P80 BN80A4**	139
16.7	292	1.0	82.6	5500	**C323_82.6 S1 M1LA4**	134	**C323_82.6 P80 BN80A4**	135
16.9	289	2.1	81.5	7000	**C413_81.5 S1 M1LA4**	142	**C413_81.5 P80 BN80A4**	143
17.5	284	1.1	52.4	5500	**C322_52.4 S2 M2SA6**	134	**C322_52.4 P80 BN80B6**	135
17.8	274	1.6	77.6	6500	**C363_77.6 S1 M1LA4**	138	**C363_77.6 P80 BN80A4**	139
18.5	264	1.1	74.7	5500	**C323_74.7 S1 M1LA4**	134	**C323_74.7 P80 BN80A4**	135
18.6	263	2.3	74.4	7000	**C413_74.4 S1 M1LA4**	142	**C413_74.4 P80 BN80A4**	143
19.5	250	1.8	70.8	6500	**C363_70.8 S1 M1LA4**	138	**C363_70.8 P80 BN80A4**	139
20.7	241	0.9	66.8	5500			**C322_66.8 P80 BN80A4**	135
21.5	228	2.6	64.3	7000	**C413_64.3 S1 M1LA4**	142	**C413_64.3 P80 BN80A4**	143
22.2	219	2.1	62.0	6500	**C363_62.0 S1 M1LA4**	138	**C363_62.0 P80 BN80A4**	139
22.6	221	1.4	40.7	5500	**C322_40.7 S2 M2SA6**	134	**C322_40.7 P80 BN80B6**	135
23.0	212	0.9	60.0	4280	**C223_60.0 S1 M1LA4**	130	**C223_60.0 P80 BN80A4**	131
23.2	214	1.0	59.4	5500	**C322_59.4 S1 M1LA4**	134	**C322_59.4 P80 BN80A4**	135
23.5	208	2.9	58.7	7000	**C413_58.7 S1 M1LA4**	142	**C413_58.7 P80 BN80A4**	143
24.6	198	2.3	56.2	6500	**C363_56.2 S1 M1LA4**	138	**C363_56.2 P80 BN80A4**	139
26.3	189	1.6	52.4	5500	**C322_52.4 S1 M1LA4**	134	**C322_52.4 P80 BN80A4**	135
26.8	182	3.3	51.5	7000	**C413_51.5 S1 M1LA4**	142	**C413_51.5 P80 BN80A4**	143
27.8	180	1.1	33.1	4270	**C222_33.1 S2 M2SA6**	130	**C222_33.1 P80 BN80B6**	131
28.7	170	2.6	48.2	6500	**C363_48.2 S1 M1LA4**	138	**C363_48.2 P80 BN80A4**	139
30	163	1.8	45.3	5500	**C322_45.3 S1 M1LA4**	134	**C322_45.3 P80 BN80A4**	135
31	162	3.1	44.8	7000	**C412_44.8 S1 M1LA4**	142	**C412_44.8 P80 BN80A4**	143
32	154	2.9	43.5	6500	**C363_43.5 S1 M1LA4**	138	**C363_43.5 P80 BN80A4**	139
32	156	1.2	43.3	4190	**C222_43.3 S1 M1LA4**	130	**C222_43.3 P80 BN80A4**	131

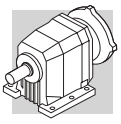

0.55 kW

n_2 min^{-1}	M_2 Nm	S	i	R_{n2} N			IEC	
34	147	2.0	40.7	5500	**C322_40.7 S1 M1LA4**	134	**C322_40.7 P80 BN80A4**	135
36	135	3.3	38.1	6500	**C363_38.1 S1 M1LA4**	138	**C363_38.1 P80 BN80A4**	139
38	133	1.5	36.8	4070	**C222_36.8 S1 M1LA4**	130	**C222_36.8 P80 BN80A4**	131
38	130	2.3	36.1	5500	**C322_36.1 S1 M1LA4**	134	**C322_36.1 P80 BN80A4**	135
42	119	1.7	33.1	3970	**C222_33.1 S1 M1LA4**	130	**C222_33.1 P80 BN80A4**	131
42	119	2.5	33.1	5500	**C322_33.1 S1 M1LA4**	134	**C322_33.1 P80 BN80A4**	135
46	107	2.8	29.8	5500	**C322_29.8 S1 M1LA4**	134	**C322_29.8 P80 BN80A4**	135
47	107	1.9	29.6	3890	**C222_29.6 S1 M1LA4**	130	**C222_29.6 P80 BN80A4**	131
47	106	0.8	29.5	1820	**C122_29.5 S1 M1LA4**	126	**C122_29.5 P80 BN80A4**	127
51	98	2.0	27.2	3860	**C222_27.2 S1 M1LA4**	130	**C222_27.2 P80 BN80A4**	131
51	97	3.1	26.9	5500	**C322_26.9 S1 M1LA4**	134	**C322_26.9 P80 BN80A4**	135
54	92	1.0	25.4	2000	**C122_25.4 S1 M1LA4**	126	**C122_25.4 P80 BN80A4**	127
55	91	3.3	25.1	5500	**C322_25.1 S1 M1LA4**	134	**C322_25.1 P80 BN80A4**	135
57	88	2.3	24.3	3720	**C222_24.3 S1 M1LA4**	130	**C222_24.3 P80 BN80A4**	131
59	84	1.0	23.2	2000	**C122_23.2 S1 M1LA4**	126	**C122_23.2 P80 BN80A4**	127
64	77	2.5	21.5	3700	**C222_21.5 S1 M1LA4**	130	**C222_21.5 P80 BN80A4**	131
67	74	1.1	20.6	2000	**C122_20.6 S1 M1LA4**	126	**C122_20.6 P80 BN80A4**	127
69	72	2.6	20.0	3560	**C222_20.0 S1 M1LA4**	130	**C222_20.0 P80 BN80A4**	131
75	66	1.2	18.4	2000	**C122_18.4 S1 M1LA4**	126	**C122_18.4 P80 BN80A4**	127
76	65	2.8	18.1	3500	**C222_18.1 S1 M1LA4**	130	**C222_18.1 P80 BN80A4**	131
80	62	1.2	17.2	2000	**C122_17.2 S1 M1LA4**	126	**C122_17.2 P80 BN80A4**	127
87	57	3.1	15.8	3350	**C222_15.8 S1 M1LA4**	130	**C222_15.8 P80 BN80A4**	131
89	56	1.3	15.4	2000	**C122_15.4 S1 M1LA4**	126	**C122_15.4 P80 BN80A4**	127
95	53	3.2	14.5	3300	**C222_14.5 S1 M1LA4**	130	**C222_14.5 P80 BN80A4**	131
103	48	1.4	13.4	1990	**C122_13.4 S1 M1LA4**	126	**C122_13.4 P80 BN80A4**	127
116	43	1.6	11.9	1920	**C122_11.9 S1 M1LA4**	126	**C122_11.9 P80 BN80A4**	127
121	41	1.6	7.6	1910	**C122_7.6 S2 M2SA6**	126	**C122_7.6 P80 BN80B6**	127
123	40	1.0	11.2	480	**C052_11.2 S1 M1LA4**	125		
137	36	1.7	10.1	1850	**C122_10.1 S1 M1LA4**	126	**C122_10.1 P80 BN80A4**	127
151	33	3.3	6.1	2860	**C222_6.1 S2 M2SA6**	130	**C222_6.1 P80 BN80B6**	131
156	32	1.9	8.8	1780	**C122_8.8 S1 M1LA4**	126	**C122_8.8 P80 BN80A4**	127
181	28	2.0	7.6	1720	**C122_7.6 S1 M1LA4**	126	**C122_7.6 P80 BN80A4**	127
186	27	1.1	7.4	460	**C052_7.4 S1 M1LA4**	125		
206	24	1.2	6.7	450	**C052_6.7 S1 M1LA4**	125		
221	22	2.4	6.2	1590	**C122_6.2 S1 M1LA4**	126	**C122_6.2 P80 BN80A4**	127
237	21	2.5	11.9	1580	**C122_11.9 S1 M1SD2**	126	**C122_11.9 P71 BN71B2**	127
246	20	2.5	5.6	1540	**C122_5.6 S1 M1LA4**	126	**C122_5.6 P80 BN80A4**	127
251	20	1.5	5.5	430	**C052_5.5 S1 M1LA4**	125		
279	18	2.7	10.1	1530	**C122_10.1 S1 M1SD2**	126	**C122_10.1 P71 BN71B2**	127
283	18	2.7	4.9	1490	**C122_4.9 S1 M1LA4**	126	**C122_4.9 P80 BN80A4**	127
320	16	3.0	8.8	1470	**C122_8.8 S1 M1SD2**	126	**C122_8.8 P71 BN71B2**	127
320	16	2.9	4.3	1420	**C122_4.3 S1 M1LA4**	126	**C122_4.3 P80 BN80A4**	127
369	14	3.3	7.6	1410	**C122_7.6 S1 M1SD2**	126	**C122_7.6 P71 BN71B2**	127
378	13	3.2	3.7	1370	**C122_3.7 S1 M1LA4**	126	**C122_3.7 P80 BN80A4**	127
451	11	3.8	6.2	1300	**C122_6.2 S1 M1SD2**	126	**C122_6.2 P71 BN71B2**	127
504	10	4.0	5.6	1260	**C122_5.6 S1 M1SD2**	126	**C122_5.6 P71 BN71B2**	127
577	9	4.4	4.9	1210	**C122_4.9 S1 M1SD2**	126	**C122_4.9 P71 BN71B2**	127
656	8	4.7	4.3	1170	**C122_4.3 S1 M1SD2**	126	**C122_4.3 P71 BN71B2**	127
770	6	5.2	3.7	1110	**C122_3.7 S1 M1SD2**	126	**C122_3.7 P71 BN71B2**	127
881	6	5.7	3.2	990	**C122_3.2 S1 M1SD2**	126	**C122_3.2 P71 BN71B2**	127
1007	5	6.1	2.8	950	**C122_2.8 S1 M1SD2**	126	**C122_2.8 P71 BN71B2**	127

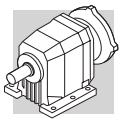

0.75 kW

n_2 min^{-1}	M_2 Nm	S	i	R_{n2} N			IEC	
0.85	7659	1.6	1081	85000	**C1004_1081 S2 M2SB6**	163	**C1004_1081 P90 BN90S6**	164
0.91	7127	1.0	1006	60000	**C904_1006 S2 M2SB6**	160	**C904_1006 P90 BN90S6**	161
1.1	5773	1.2	1240	35000	**C904_1240 S2 M2SA4**	160	**C904_1240 P80 BN80B4**	161
1.5	4403	0.9	945.7	35000	**C804_945.7 S2 M2SA4**	157	**C804_945.7 P80 BN80B4**	158
1.5	4294	1.7	922.3	60000	**C904_922.3 S2 M2SA4**	160	**C904_922.3 P80 BN80B4**	161
1.8	3647	1.1	783.4	35000	**C804_783.4 S2 M2SA4**	157	**C804_783.4 P80 BN80B4**	158
1.8	3602	2.0	773.6	60000	**C904_773.6 S2 M2SA4**	160	**C904_773.6 P80 BN80B4**	161
2.1	3093	1.3	664.3	35000	**C804_664.3 S2 M2SA4**	157	**C804_664.3 P80 BN80B4**	158
2.1	3039	2.4	652.8	60000	**C904_652.8 S2 M2SA4**	160	**C904_652.8 P80 BN80B4**	161
2.6	2487	2.9	534.2	60000	**C904_534.2 S2 M2SA4**	160	**C904_534.2 P80 BN80B4**	161
2.6	2464	1.6	529.3	35000	**C804_529.3 S2 M2SA4**	157	**C804_529.3 P80 BN80B4**	158
3.1	2128	3.4	457.1	60000	**C904_457.1 S2 M2SA4**	160	**C904_457.1 P80 BN80B4**	161
3.1	2120	1.9	455.4	35000	**C804_455.4 S2 M2SA4**	157	**C804_455.4 P80 BN80B4**	158
3.2	2065	1.1	443.5	25000	**C704_443.5 S2 M2SA4**	154	**C704_443.5 P80 BN80B4**	155
3.3	1962	0.8	421.5	16000	**C614_421.5 S2 M2SA4**	150	**C614_421.5 P80 BN80B4**	151
3.4	1906	1.2	409.4	25000	**C704_409.4 S2 M2SA4**	154	**C704_409.4 P80 BN80B4**	155
3.8	1723	0.9	370.1	16000	**C614_370.1 S2 M2SA4**	150	**C614_370.1 P80 BN80B4**	151
3.8	1733	1.3	239.3	25000	**C703_239.3 S2 M2SB6**	154	**C703_239.3 P90 BN90S6**	155
4.1	1572	1.0	337.7	16000	**C614_337.7 S2 M2SA4**	150	**C614_337.7 P80 BN80B4**	151
4.3	1563	2.6	215.8	35000	**C803_215.8 S2 M2SB6**	157	**C803_215.8 P90 BN90S6**	158
4.4	1480	1.6	317.9	25000	**C704_317.9 S2 M2SA4**	154	**C704_317.9 P80 BN80B4**	155
4.6	1405	1.1	301.7	16000	**C614_301.7 S2 M2SA4**	150	**C614_301.7 P80 BN80B4**	151
4.7	1417	1.1	195.8	16000	**C613_195.8 S2 M2SB6**	150	**C613_195.8 P90 BN90S6**	151
5.1	1282	1.2	275.3	16000	**C614_275.3 S2 M2SA4**	150	**C614_275.3 P80 BN80B4**	151
5.1	1267	1.8	272.2	25000	**C704_272.2 S2 M2SA4**	154	**C704_272.2 P80 BN80B4**	155
5.2	1293	1.2	178.6	16000	**C613_178.6 S2 M2SB6**	150	**C613_178.6 P90 BN90S6**	151
5.3	1228	0.8	263.8	10000	**C514_263.8 S2 M2SA4**	146	**C514_263.8 P80 BN80B4**	147
5.6	1191	1.3	164.5	16000	**C613_164.5 S2 M2SB6**	150	**C613_164.5 P90 BN90S6**	151
5.8	1121	0.9	240.9	10000	**C514_240.9 S2 M2SA4**	146	**C514_240.9 P80 BN80B4**	147
5.8	1139	2.0	239.3	25000	**C703_239.3 S2 M2SA4**	154	**C703_239.3 P80 BN80B4**	155
6.3	1051	2.1	220.9	25000	**C703_220.9 S2 M2SA4**	154	**C703_220.9 P80 BN80B4**	155
6.4	1012	1.6	217.4	16000	**C614_217.4 S2 M2SA4**	150	**C614_217.4 P80 BN80B4**	151
6.5	1031	1.0	216.7	10000	**C513_216.7 S2 M2SA4**	146	**C513_216.7 P80 BN80B4**	147
7.1	941	1.1	197.9	10000	**C513_197.9 S2 M2SA4**	146	**C513_197.9 P80 BN80B4**	147
7.2	931	1.7	195.8	16000	**C613_195.8 S2 M2SA4**	150	**C613_195.8 P80 BN80B4**	151
7.2	924	2.5	194.1	25000	**C703_194.1 S2 M2SA4**	154	**C703_194.1 P80 BN80B4**	155
7.8	850	1.9	178.6	16000	**C613_178.6 S2 M2SA4**	150	**C613_178.6 P80 BN80B4**	151
8.0	836	1.2	175.8	10000	**C513_175.8 S2 M2SA4**	146	**C513_175.8 P80 BN80B4**	147
8.5	782	2.0	164.5	16000	**C613_164.5 S2 M2SA4**	150	**C613_164.5 P80 BN80B4**	151
8.6	775	3.0	162.8	25000	**C703_162.8 S2 M2SA4**	154	**C703_162.8 P80 BN80B4**	155
8.7	764	1.3	160.5	10000	**C513_160.5 S2 M2SA4**	146	**C513_160.5 P80 BN80B4**	147
9.3	714	2.2	150.0	16000	**C613_150.0 S2 M2SA4**	150	**C613_150.0 P80 BN80B4**	151
9.5	702	1.4	147.4	10000	**C513_147.4 S2 M2SA4**	146	**C513_147.4 P80 BN80B4**	147
10.0	668	2.4	140.5	16000	**C613_140.5 S2 M2SA4**	150	**C613_140.5 P80 BN80B4**	151
10.2	654	3.5	137.4	25000	**C703_137.4 S2 M2SA4**	154	**C703_137.4 P80 BN80B4**	155
10.4	641	1.6	134.6	10000	**C513_134.6 S2 M2SA4**	146	**C513_134.6 P80 BN80B4**	147
10.5	632	0.9	132.9	7000	**C413_132.9 S2 M2SA4**	142	**C413_132.9 P80 BN80B4**	143
10.9	610	2.6	128.1	16000	**C613_128.1 S2 M2SA4**	150	**C613_128.1 P80 BN80B4**	151
11.3	592	1.7	124.4	10000	**C513_124.4 S2 M2SA4**	146	**C513_124.4 P80 BN80B4**	147
11.6	574	1.0	120.6	7000	**C413_120.6 S2 M2SA4**	142	**C413_120.6 P80 BN80B4**	143
12.3	541	3.0	113.6	16000	**C613_113.6 S2 M2SA4**	150	**C613_113.6 P80 BN80B4**	151

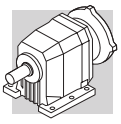

0.75 kW

n_2 min^{-1}	M_2 Nm	S	i	R_{n2} N			IEC	
12.3	541	1.9	113.6	10000	**C513_113.6 S2 M2SA4**	146	**C513_113.6 P80 BN80B4**	147
12.7	524	1.1	110.1	7000	**C413_110.1 S2 M2SA4**	142	**C413_110.1 P80 BN80B4**	143
13.5	493	3.2	103.6	16000	**C613_103.6 S2 M2SA4**	150	**C613_103.6 P80 BN80B4**	151
13.7	487	1.2	102.3	7000	**C413_102.3 S2 M2SA4**	142	**C413_102.3 P80 BN80B4**	143
13.7	485	0.9	102.2	6500	**C363_102.2 S2 M2SA4**	138	**C363_102.2 P80 BN80B4**	139
13.8	484	2.1	101.8	10000	**C513_101.8 S2 M2SA4**	146	**C513_101.8 P80 BN80B4**	147
15.0	444	1.4	93.3	7000	**C413_93.3 S2 M2SA4**	142	**C413_93.3 P80 BN80B4**	143
15.1	442	2.3	93.0	10000	**C513_93.0 S2 M2SA4**	146	**C513_93.0 P80 BN80B4**	147
15.2	436	1.0	91.9	6500	**C363_91.9 S2 M2SA4**	138	**C363_91.9 P80 BN80B4**	139
16.8	394	1.1	83.1	6500	**C363_83.1 S2 M2SA4**	138	**C363_83.1 P80 BN80B4**	139
17.2	388	1.5	81.5	7000	**C413_81.5 S2 M2SA4**	142	**C413_81.5 P80 BN80B4**	143
17.5	380	2.6	79.9	10000	**C513_79.9 S2 M2SA4**	146	**C513_79.9 P80 BN80B4**	147
18.0	368	1.2	77.6	6500	**C363_77.6 S2 M2SA4**	138	**C363_77.6 P80 BN80B4**	139
18.8	354	1.7	74.4	7000	**C413_74.4 S2 M2SA4**	142	**C413_74.4 P80 BN80B4**	143
19.2	347	2.9	72.9	10000	**C513_72.9 S2 M2SA4**	146	**C513_72.9 P80 BN80B4**	147
19.8	336	1.3	70.8	6500	**C363_70.8 S2 M2SA4**	138	**C363_70.8 P80 BN80B4**	139
21.7	307	3.3	64.6	10000	**C513_64.6 S2 M2SA4**	146	**C513_64.6 P80 BN80B4**	147
21.8	306	2.0	64.3	7000	**C413_64.3 S2 M2SA4**	142	**C413_64.3 P80 BN80B4**	143
22.6	294	1.5	62.0	6500	**C363_62.0 S2 M2SA4**	138	**C363_62.0 P80 BN80B4**	139
22.6	301	1.0	40.7	5500	**C322_40.7 S2 M2SB6**	134	**C322_40.7 P90 BN90S6**	135
23.9	279	2.1	58.7	7000	**C413_58.7 S2 M2SA4**	142	**C413_58.7 P80 BN80B4**	143
24.6	277	2.8	57.0	10000	**C512_57.0 S2 M2SA4**	146	**C512_57.0 P80 BN80B4**	147
24.9	266	1.7	56.2	6500	**C363_56.2 S2 M2SA4**	138	**C363_56.2 P80 BN80B4**	139
26.7	254	1.2	52.4	5500	**C322_52.4 S2 M2SA4**	134	**C322_52.4 P80 BN80B4**	135
27.2	245	2.4	51.5	7000	**C413_51.5 S2 M2SA4**	142	**C413_51.5 P80 BN80B4**	143
27.2	250	2.8	51.4	10000	**C512_51.4 S2 M2SA4**	146	**C512_51.4 P80 BN80B4**	147
29.1	228	2.0	48.2	6500	**C363_48.2 S2 M2SA4**	138	**C363_48.2 P80 BN80B4**	139
29.3	232	3.4	47.8	10000	**C512_47.8 S2 M2SA4**	146	**C512_47.8 P80 BN80B4**	147
30	223	2.7	47.0	7000	**C413_47.0 S2 M2SA4**	142	**C413_47.0 P80 BN80B4**	143
31	218	2.3	44.8	7000	**C412_44.8 S2 M2SA4**	142	**C412_44.8 P80 BN80B4**	143
31	219	1.4	45.3	5500	**C322_45.3 S2 M2SA4**	134	**C322_45.3 P80 BN80B4**	135
32	206	2.2	43.5	6500	**C363_43.5 S2 M2SA4**	138	**C363_43.5 P80 BN80B4**	139
32	210	0.9	43.3	3810	**C222_43.3 S2 M2SA4**	130	**C222_43.3 P80 BN80B4**	131
34	197	1.5	40.7	5500	**C322_40.7 S2 M2SA4**	134	**C322_40.7 P80 BN80B4**	135
35	192	3.1	40.3	7000	**C413_40.3 S2 M2SA4**	142	**C413_40.3 P80 BN80B4**	143
37	181	2.5	38.1	6500	**C363_38.1 S2 M2SA4**	138	**C363_38.1 P80 BN80B4**	139
38	180	2.8	37.1	7000	**C412_37.1 S2 M2SA4**	142	**C412_37.1 P80 BN80B4**	143
38	178	1.1	36.8	3750	**C222_36.8 S2 M2SA4**	130	**C222_36.8 P80 BN80B4**	131
39	175	1.7	36.1	5500	**C322_36.1 S2 M2SA4**	134	**C322_36.1 P80 BN80B4**	135
40	164	2.7	34.6	6500	**C363_34.6 S2 M2SA4**	138	**C363_34.6 P80 BN80B4**	139
42	160	1.2	33.1	3680	**C222_33.1 S2 M2SA4**	130	**C222_33.1 P80 BN80B4**	131
42	160	1.9	33.1	5500	**C322_33.1 S2 M2SA4**	134	**C322_33.1 P80 BN80B4**	135
47	144	2.1	29.8	5500	**C322_29.8 S2 M2SA4**	134	**C322_29.8 P80 BN80B4**	135
47	144	1.4	29.6	3630	**C222_29.6 S2 M2SA4**	130	**C222_29.6 P80 BN80B4**	131
49	136	3.3	28.7	6490	**C363_28.7 S2 M2SA4**	138	**C363_28.7 P80 BN80B4**	139
52	132	1.5	27.2	3600	**C222_27.2 S2 M2SA4**	130	**C222_27.2 P80 BN80B4**	131
52	130	2.3	26.9	5500	**C322_26.9 S2 M2SA4**	134	**C322_26.9 P80 BN80B4**	135
56	122	2.5	25.1	5460	**C322_25.1 S2 M2SA4**	134	**C322_25.1 P80 BN80B4**	135
58	118	1.7	24.3	3510	**C222_24.3 S2 M2SA4**	130	**C222_24.3 P80 BN80B4**	131
61	111	2.7	22.9	5300	**C322_22.9 S2 M2SA4**	134	**C322_22.9 P80 BN80B4**	135
65	104	1.9	21.5	3480	**C222_21.5 S2 M2SA4**	130	**C222_21.5 P80 BN80B4**	131

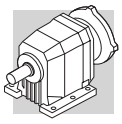

0.75 kW

n_2 min^{-1}	M_2 Nm	S	i	R_{n2} N			IEC	
70	97	3.0	20.1	5150	**C322_20.1 S2 M2SA4**	134	**C322_20.1 P80 BN80B4**	135
70	97	2.0	20.0	3380	**C222_20.0 S2 M2SA4**	130	**C222_20.0 P80 BN80B4**	131
77	88	2.1	18.1	3350	**C222_18.1 S2 M2SA4**	130	**C222_18.1 P80 BN80B4**	131
82	83	0.9	17.2	1750	**C122_17.2 S2 M2SA4**	126	**C122_17.2 P80 BN80B4**	127
88	77	2.3	15.8	3210	**C222_15.8 S2 M2SA4**	130	**C222_15.8 P80 BN80B4**	131
91	75	1.0	15.4	1920	**C122_15.4 S2 M2SA4**	126	**C122_15.4 P80 BN80B4**	127
96	70	2.4	14.5	3200	**C222_14.5 S2 M2SA4**	130	**C222_14.5 P80 BN80B4**	131
104	65	1.1	13.4	1870	**C122_13.4 S2 M2SA4**	126	**C122_13.4 P80 BN80B4**	127
113	60	2.7	12.4	3030	**C222_12.4 S2 M2SA4**	130	**C222_12.4 P80 BN80B4**	131
118	58	1.2	11.9	1780	**C122_11.9 S2 M2SA4**	126	**C122_11.9 P80 BN80B4**	127
126	54	2.9	11.1	2980	**C222_11.1 S2 M2SA4**	130	**C222_11.1 P80 BN80B4**	131
139	49	1.3	10.1	1760	**C122_10.1 S2 M2SA4**	126	**C122_10.1 P80 BN80B4**	127
145	47	3.1	9.6	2840	**C222_9.6 S2 M2SA4**	130	**C222_9.6 P80 BN80B4**	131
158	43	1.4	8.8	1700	**C122_8.8 S2 M2SA4**	126	**C122_8.8 P80 BN80B4**	127
162	42	3.3	8.7	2760	**C222_8.7 S2 M2SA4**	130	**C222_8.7 P80 BN80B4**	131
184	37	1.5	7.6	1650	**C122_7.6 S2 M2SA4**	126	**C122_7.6 P80 BN80B4**	127
225	30	1.8	6.2	1530	**C122_6.2 S2 M2SA4**	126	**C122_6.2 P80 BN80B4**	127
236	29	1.8	11.9	1520	**C122_11.9 S1 M1LA2**	126	**C122_11.9 P80 BN80A2**	127
250	27	1.9	5.6	1470	**C122_5.6 S2 M2SA4**	126	**C122_5.6 P80 BN80B4**	127
278	24	2.0	10.1	1490	**C122_10.1 S1 M1LA2**	126	**C122_10.1 P80 BN80A2**	127
288	24	2.0	4.9	1440	**C122_4.9 S2 M2SA4**	126	**C122_4.9 P80 BN80B4**	127
319	22	2.2	8.8	1420	**C122_8.8 S1 M1LA2**	126	**C122_8.8 P80 BN80A2**	127
325	21	2.2	4.3	1370	**C122_4.3 S2 M2SA4**	126	**C122_4.3 P80 BN80B4**	127
332	20	2.1	2.8	1390	**C122_2.8 S2 M2SB6**	126	**C122_2.8 P90 BN90S6**	127
367	19	2.4	7.6	1380	**C122_7.6 S1 M1LA2**	126	**C122_7.6 P80 BN80A2**	127
383	18	2.4	3.7	1330	**C122_3.7 S2 M2SA4**	126	**C122_3.7 P80 BN80B4**	127
436	16	2.6	3.2	1280	**C122_3.2 S2 M2SA4**	126	**C122_3.2 P80 BN80B4**	127
449	15	2.8	6.2	1280	**C122_6.2 S1 M1LA2**	126	**C122_6.2 P80 BN80A2**	127
506	13	2.8	2.8	1230	**C122_2.8 S2 M2SA4**	126	**C122_2.8 P80 BN80B4**	127
502	14	2.9	5.6	1240	**C122_5.6 S1 M1LA2**	126	**C122_5.6 P80 BN80A2**	127
575	12	3.2	4.9	1190	**C122_4.9 S1 M1LA2**	126	**C122_4.9 P80 BN80A2**	127
653	11	3.4	4.3	1050	**C122_4.3 S1 M1LA2**	126	**C122_4.3 P80 BN80A2**	127
767	9	3.8	3.7	1090	**C122_3.7 S1 M1LA2**	126	**C122_3.7 P80 BN80A2**	127
878	8	4.0	3.2	1050	**C122_3.2 S1 M1LA2**	126	**C122_3.2 P80 BN80A2**	127
1012	7	4.5	2.8	1010	**C122_2.8 S1 M1LA2**	126	**C122_2.8 P80 BN80A2**	127

1.1 kW

n_2 min^{-1}	M_2 Nm	S	i	R_{n2} N			IEC	
0.85	11232	1.1	1081	85000	**C1004_1081 S3 M3SA6**	163	**C1004_1081 P90 BN90L6**	164
1.0	9437	1.3	908.2	85000	**C1004_908.2 S3 M3SA6**	163	**C1004_908.2 P90 BN90L6**	164
1.2	7764	0.9	1137	60000	**C904_1137 S2 M2SB4**	160	**C904_1137 P90 BN90S4**	161
1.3	7381	1.6	1081	85000	**C1004_1081 S2 M2SB4**	163	**C1004_1081 P90 BN90S4**	164
1.4	6869	1.0	1006	60000	**C904_1006 S2 M2SB4**	160	**C904_1006 P90 BN90S4**	161
1.4	6856	1.8	1004	85000	**C1004_1004 S2 M2SB4**	163	**C1004_1004 P90 BN90S4**	164
1.7	5763	1.2	844.0	60000	**C904_844.0 S2 M2SB4**	160	**C904_844.0 P90 BN90S4**	161
1.7	5758	2.1	843.3	85000	**C1004_843.3 S2 M2SB4**	163	**C1004_843.3 P90 BN90S4**	164
2.1	4457	1.6	652.8	60000	**C904_652.8 S2 M2SB4**	160	**C904_652.8 P90 BN90S4**	161

1.1 kW

n_2 min^{-1}	M_2 Nm	S	i	R_{n2} N			IEC	
2.2	4284	2.8	627.4	85000	**C1004_627.4 S2 M2SB4**	163	**C1004_627.4 P90 BN90S4**	164
2.6	3648	2.0	534.2	60000	**C904_534.2 S2 M2SB4**	160	**C904_534.2 P90 BN90S4**	161
2.6	3614	1.1	529.3	35000	**C804_529.3 S2 M2SB4**	157	**C804_529.3 P90 BN90S4**	158
3.3	2861	2.5	419.0	60000	**C904_419.0 S2 M2SB4**	160	**C904_419.0 P90 BN90S4**	161
3.4	2851	1.4	417.5	35000	**C804_417.5 S2 M2SB4**	157	**C804_417.5 P90 BN90S4**	158
3.8	2490	1.6	364.7	35000	**C804_364.7 S2 M2SB4**	157	**C804_364.7 P90 BN90S4**	158
4.1	2351	1.0	344.3	25000	**C704_344.3 S2 M2SB4**	154	**C704_344.3 P90 BN90S4**	155
4.2	2283	1.8	334.3	35000	**C804_334.3 S2 M2SB4**	157	**C804_334.3 P90 BN90S4**	158
4.4	2171	1.1	317.9	25000	**C704_317.9 S2 M2SB4**	154	**C704_317.9 P90 BN90S4**	155
4.6	2060	0.8	301.7	16000	**C614_301.7 S2 M2SB4**	150	**C614_301.7 P90 BN90S4**	151
4.9	1951	2.1	285.7	35000	**C804_285.7 S2 M2SB4**	157	**C804_285.7 P90 BN90S4**	158
5.1	1880	0.9	275.3	16000	**C614_275.3 S2 M2SB4**	150	**C614_275.3 P90 BN90S4**	151
5.1	1859	1.2	272.2	25000	**C704_272.2 S2 M2SB4**	154	**C704_272.2 P90 BN90S4**	155
5.6	1716	1.3	251.3	25000	**C704_251.3 S2 M2SB4**	154	**C704_251.3 P90 BN90S4**	155
5.6	1746	0.9	164.5	16000	**C613_164.5 S3 M3SA6**	150	**C613_164.5 P90 BN90L6**	151
6.1	1593	1.0	150.0	16000	**C613_150.0 S3 M3SA6**	150	**C613_150.0 P90 BN90L6**	151
6.3	1542	1.5	220.9	25000	**C703_220.9 S2 M2SB4**	154	**C703_220.9 P90 BN90S4**	155
7.2	1366	1.2	195.8	16000	**C613_195.8 S2 M2SB4**	150	**C613_195.8 P90 BN90S4**	151
7.8	1250	1.8	179.2	25000	**C703_179.2 S2 M2SB4**	154	**C703_179.2 P90 BN90S4**	155
7.8	1246	1.3	178.6	16000	**C613_178.6 S2 M2SB4**	150	**C613_178.6 P90 BN90S4**	151
8.5	1148	1.4	164.5	16000	**C613_164.5 S2 M2SB4**	150	**C613_164.5 P90 BN90S4**	151
9.3	1049	2.2	150.3	25000	**C703_150.3 S2 M2SB4**	154	**C703_150.3 P90 BN90S4**	155
9.3	1047	1.5	150.0	16000	**C613_150.0 S2 M2SB4**	150	**C613_150.0 P90 BN90S4**	151
9.5	1029	1.0	147.4	10000	**C513_147.4 S2 M2SB4**	146	**C513_147.4 P90 BN90S4**	147
10.0	980	1.6	140.5	16000	**C613_140.5 S2 M2SB4**	150	**C613_140.5 P90 BN90S4**	151
10.4	939	1.1	134.6	10000	**C513_134.6 S2 M2SB4**	146	**C513_134.6 P90 BN90S4**	147
10.9	894	1.8	128.1	16000	**C613_128.1 S2 M2SB4**	150	**C613_128.1 P90 BN90S4**	151
11.0	885	2.6	126.8	25000	**C703_126.8 S2 M2SB4**	154	**C703_126.8 P90 BN90S4**	155
11.3	868	1.2	124.4	10000	**C513_124.4 S2 M2SB4**	146	**C513_124.4 P90 BN90S4**	147
12.3	793	2.0	113.6	16000	**C613_113.6 S2 M2SB4**	150	**C613_113.6 P90 BN90S4**	151
12.3	793	1.3	113.6	10000	**C513_113.6 S2 M2SB4**	146	**C513_113.6 P90 BN90S4**	147
12.5	785	2.9	112.4	25000	**C703_112.4 S2 M2SB4**	154	**C703_112.4 P90 BN90S4**	155
13.5	723	2.2	103.6	16000	**C613_103.6 S2 M2SB4**	150	**C613_103.6 P90 BN90S4**	151
13.8	710	1.4	101.8	10000	**C513_101.8 S2 M2SB4**	146	**C513_101.8 P90 BN90S4**	147
15.0	651	0.9	93.3	7000	**C413_93.3 S2 M2SB4**	142	**C413_93.3 P90 BN90S4**	143
15.1	649	1.5	93.0	10000	**C513_93.0 S2 M2SB4**	146	**C513_93.0 P90 BN90S4**	147
15.4	635	2.5	91.0	16000	**C613_91.0 S2 M2SB4**	150	**C613_91.0 P90 BN90S4**	151
16.9	579	2.8	83.0	16000	**C613_83.0 S2 M2SB4**	150	**C613_83.0 P90 BN90S4**	151
17.2	569	1.1	81.5	7000	**C413_81.5 S2 M2SB4**	142	**C413_81.5 P90 BN90S4**	143
17.5	557	1.8	79.9	10000	**C513_79.9 S2 M2SB4**	146	**C513_79.9 P90 BN90S4**	147
18.8	519	1.2	74.4	7000	**C413_74.4 S2 M2SB4**	142	**C413_74.4 P90 BN90S4**	143
18.9	518	3.1	74.2	16000	**C613_74.2 S2 M2SB4**	150	**C613_74.2 P90 BN90S4**	151
19.2	509	2.0	72.9	10000	**C513_72.9 S2 M2SB4**	146	**C513_72.9 P90 BN90S4**	147
19.8	494	0.9	70.8	6500	**C363_70.8 S2 M2SB4**	138	**C363_70.8 P90 BN90S4**	139
20.7	472	3.4	67.7	16000	**C613_67.7 S2 M2SB4**	150	**C613_67.7 P90 BN90S4**	151
21.7	451	2.2	64.6	10000	**C513_64.6 S2 M2SB4**	146	**C513_64.6 P90 BN90S4**	147
21.8	449	1.3	64.3	7000	**C413_64.3 S2 M2SB4**	142	**C413_64.3 P90 BN90S4**	143
22.6	433	1.0	62.0	6500	**C363_62.0 S2 M2SB4**	138	**C363_62.0 P90 BN90S4**	139
23.7	412	2.4	59.0	10000	**C513_59.0 S2 M2SB4**	146	**C513_59.0 P90 BN90S4**	147
23.9	409	1.5	58.7	7000	**C413_58.7 S2 M2SB4**	142	**C413_58.7 P90 BN90S4**	143
24.6	406	1.9	57.0	10000	**C512_57.0 S2 M2SB4**	146	**C512_57.0 P90 BN90S4**	147

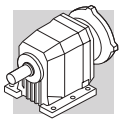

1.1 kW

n_2 min^{-1}	M_2 Nm	S	i	R_{n2} N			IEC	
24.9	392	1.1	56.2	6500	**C363_56.2 S2 M2SB4**	138	**C363_56.2 P90BN90S4**	139
27.2	359	1.7	51.5	7000	**C413_51.5 S2 M2SB4**	142	**C413_51.5 P90 BN90S4**	143
27.2	366	1.9	51.4	10000	**C512_51.4 S2 M2SB4**	146	**C512_51.4 P90 BN90S4**	147
27.4	357	2.8	51.2	10000	**C513_51.2 S2 M2SB4**	146	**C513_51.2 P90 BN90S4**	147
29.1	336	1.3	48.2	6500	**C363_48.2 S2 M2SB4**	138	**C363_48.2 P90 BN90S4**	139
29.3	341	2.3	47.8	10000	**C512_47.8 S2 M2SB4**	146	**C512_47.8 P90 BN90S4**	147
29.8	328	1.8	47.0	7000	**C413_47.0 S2 M2SB4**	142	**C413_47.0 P90 BN90S4**	143
30	326	3.1	46.7	10000	**C513_46.7 S2 M2SB4**	146	**C513_46.7 P90 BN90S4**	147
31	319	1.6	44.8	7000	**C412_44.8 S2 M2SB4**	142	**C412_44.8 P90 BN90S4**	143
31	322	0.9	45.3	5500	**C322_45.3 S2 M2SB4**	134	**C322_45.3 P90 BN90S4**	135
32	307	2.5	43.1	10000	**C512_43.1 S2 M2SB4**	146	**C512_43.1 P90 BN90S4**	147
32	303	1.5	43.5	6500	**C363_43.5 S2 M2SB4**	138	**C363_43.5 P90 BN90S4**	139
34	290	1.0	40.7	5500	**C322_40.7 S2 M2SB4**	134	**C322_40.7 P90 BN90S4**	135
35	288	2.8	40.4	10000	**C512_40.4 S2 M2SB4**	146	**C512_40.4 P90 BN90S4**	147
35	281	2.1	40.3	7000	**C413_40.3 S2 M2SB4**	142	**C413_40.3 P90 BN90S4**	143
37	266	1.7	38.1	6500	**C363_38.1 S2 M2SB4**	138	**C363_38.1 P90 BN90S4**	139
38	257	2.3	36.8	7000	**C413_36.8 S2 M2SB4**	142	**C413_36.8 P90 BN90S4**	143
38	264	1.9	37.1	7000	**C412_37.1 S2 M2SB4**	142	**C412_37.1 P90 BN90S4**	143
39	257	1.2	36.1	5500	**C322_36.1 S2 M2SB4**	134	**C322_36.1 P90 BN90S4**	135
40	241	1.9	34.6	6300	**C363_34.6 S2 M2SB4**	138	**C363_34.6 P90 BN90S4**	139
42	238	2.1	33.4	7000	**C412_33.4 S2 M2SB4**	142	**C412_33.4 P90 BN90S4**	143
42	236	1.3	33.1	5420	**C322_33.1 S2 M2SB4**	134	**C322_33.1 P90 BN90S4**	135
45	224	2.2	31.4	7000	**C412_31.4 S2 M2SB4**	142	**C412_31.4 P90 BN90S4**	143
45	218	2.6	31.2	7000	**C413_31.2 S2 M2SB4**	142	**C413_31.2 P90 BN90S4**	143
47	212	1.4	29.8	5360	**C322_29.8 S2 M2SB4**	134	**C322_29.8 P90 BN90S4**	135
47	211	0.9	29.6	3190	**C222_29.6 S2 M2SB4**	130	**C222_29.6 P90 BN90S4**	131
49	199	2.8	28.5	7000	**C413_28.5 S2 M2SB4**	142	**C413_28.5 P90 BN90S4**	143
49	202	2.5	28.3	7000	**C412_28.3 S2 M2SB4**	142	**C412_28.3 P90 BN90S4**	143
49	200	2.2	28.7	6190	**C363_28.7 S2 M2SB4**	138	**C363_28.7 P90 BN90S4**	139
52	193	1.0	27.2	3160	**C222_27.2 S2 M2SB4**	130	**C222_27.2 P90 BN90S4**	131
52	192	1.6	26.9	5220	**C322_26.9 S2 M2SB4**	134	**C322_26.9 P90 BN90S4**	135
53	183	2.4	26.2	5930	**C363_26.2 S2 M2SB4**	138	**C363_26.2 P90 BN90S4**	139
56	179	1.7	25.1	5180	**C322_25.1 S2 M2SB4**	134	**C322_25.1 P90 BN90S4**	135
58	173	1.2	24.3	3150	**C222_24.3 S2 M2SB4**	130	**C222_24.3 P90 BN90S4**	131
61	163	1.8	22.9	5050	**C322_22.9 S2 M2SB4**	134	**C322_22.9 P90 BN90S4**	135
62	161	3.1	22.6	6810	**C412_22.6 S2 M2SB4**	142	**C412_22.6 P90 BN90S4**	143
63	154	2.8	22.1	5680	**C363_22.1 S2 M2SB4**	138	**C363_22.1 P90 BN90S4**	139
65	153	1.3	21.5	3120	**C222_21.5 S2 M2SB4**	130	**C222_21.5 P90 BN90S4**	131
70	143	2.1	20.1	4920	**C322_20.1 S2 M2SB4**	134	**C322_20.1 P90 BN90S4**	135
70	143	1.3	20.0	3080	**C222_20.0 S2 M2SB4**	130	**C222_20.0 P90 BN90S4**	131
74	135	2.8	19.0	5580	**C362_19.0 S2 M2SB4**	138	**C362_19.0 P90 BN90S4**	139
77	130	2.1	18.2	4760	**C322_18.2 S2 M2SB4**	134	**C322_18.2 P90 BN90S4**	135
77	129	1.4	18.1	3020	**C222_18.1 S2 M2SB4**	130	**C222_18.1 P90 BN90S4**	131
81	123	3.1	17.2	5300	**C362_17.2 S2 M2SB4**	138	**C362_17.2 P90 BN90S4**	139
88	113	1.6	15.8	2970	**C222_15.8 S2 M2SB4**	130	**C222_15.8 P90 BN90S4**	131
90	111	2.4	15.6	4630	**C322_15.6 S2 M2SB4**	134	**C322_15.6 P90 BN90S4**	135
96	104	1.6	14.5	2940	**C222_14.5 S2 M2SB4**	130	**C222_14.5 P90 BN90S4**	131
99	100	2.5	14.1	4480	**C322_14.1 S2 M2SB4**	134	**C322_14.1 P90 BN90S4**	135
113	88	1.8	12.4	2840	**C222_12.4 S2 M2SB4**	130	**C222_12.4 P90 BN90S4**	131
114	88	2.8	12.3	4350	**C322_12.3 S2 M2SB4**	134	**C322_12.3 P90 BN90S4**	135
125	80	2.9	11.2	4200	**C322_11.2 S2 M2SB4**	134	**C322_11.2 P90 BN90S4**	135

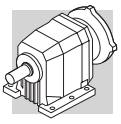

1.1 kW

n_2 min^{-1}	M_2 Nm	S	i	R_{n2} N			IEC	
126	79	1.9	11.1	2800	**C222_11.1 S2 M2SB4**	130	**C222_11.1 P90 BN90S4**	131
139	72	0.9	10.1	1400	**C122_10.1 S2 M2SB4**	126	**C122_10.1 P90 BN90S4**	127
145	69	2.1	9.6	2700	**C222_9.6 S2 M2SB4**	130	**C222_9.6 P90 BN90S4**	131
151	66	3.3	9.3	4030	**C322_9.3 S2 M2SB4**	134	**C322_9.3 P90 BN90S4**	135
158	63	0.9	8.8	1560	**C122_8.8 S2 M2SB4**	126	**C122_8.8 P90 BN90S4**	127
162	62	2.2	8.7	2630	**C222_8.7 S2 M2SB4**	130	**C222_8.7 P90 BN90S4**	131
184	54	1.0	7.6	1550	**C122_7.6 S2 M2SB4**	126	**C122_7.6 P90 BN90S4**	127
198	50	2.6	7.1	2510	**C222_7.1 S2 M2SB4**	130	**C222_7.1 P90 BN90S4**	131
225	44	1.2	6.2	1220	**C122_6.2 S2 M2SB4**	126	**C122_6.2 P90 BN90S4**	127
230	43	2.4	6.1	2380	**C222_6.1 S2 M2SB4**	130	**C222_6.1 P90 BN90S4**	131
235	43	1.2	11.9	1420	**C122_11.9 S2 M2SA2**	126	**C122_11.9 P80 BN80B2**	127
250	40	1.3	5.6	1270	**C122_5.6 S2 M2SB4**	126	**C122_5.6 P90 BN90S4**	127
250	40	2.6	5.6	2350	**C222_5.6 S2 M2SB4**	130	**C222_5.6 P90 BN90S4**	131
252	40	3.0	11.1	2980	**C222_11.1 S2 M2SA2**	130	**C222_11.1 P80 BN80B2**	131
252	40	1.2	3.7	1320	**C122_3.7 S3 M3SA6**	126	**C122_3.7 P90 BN90L6**	127
278	36	1.4	10.1	1420	**C122_10.1 S2 M2SA2**	126	**C122_10.1 P80 BN80B2**	127
288	35	1.4	4.9	1370	**C122_4.9 S2 M2SB4**	126	**C122_4.9 P90 BN90S4**	127
294	34	2.9	4.8	2240	**C222_4.8 S2 M2SB4**	130	**C222_4.8 P90 BN90S4**	131
318	32	1.5	8.8	1370	**C122_8.8 S2 M2SA2**	126	**C122_8.8 P80 BN80B2**	127
325	31	1.5	4.3	1320	**C122_4.3 S2 M2SB4**	126	**C122_4.3 P90 BN90S4**	127
329	30	3.1	4.3	2200	**C222_4.3 S2 M2SB4**	130	**C222_4.3 P90 BN90S4**	131
332	30	1.4	2.8	1320	**C122_2.8 S3 M3SA6**	126	**C122_2.8 P90 BN90L6**	127
338	30	3.2	2.7	2160	**C222_2.7 S3 M3SA6**	130	**C222_2.7 P90 BN90L6**	131
367	27	1.7	7.6	1330	**C122_7.6 S2 M2SA2**	126	**C122_7.6 P80 BN80B2**	127
378	26	3.4	3.7	2090	**C222_3.7 S2 M2SB4**	130	**C222_3.7 P90 BN90S4**	131
383	26	1.6	3.7	1280	**C122_3.7 S2 M2SB4**	126	**C122_3.7 P90 BN90S4**	127
436	23	1.8	3.2	1230	**C122_3.2 S2 M2SB4**	126	**C122_3.2 P90 BN90S4**	127
449	22	1.9	6.2	1230	**C122_6.2 S2 M2SA2**	126	**C122_6.2 P80 BN80B2**	127
500	20	2.0	5.6	1190	**C122_5.6 S2 M2SA2**	126	**C122_5.6 P80 BN80B2**	127
506	20	1.9	2.8	1190	**C122_2.8 S2 M2SB4**	126	**C122_2.8 P90 BN90S4**	127
575	17	2.2	4.9	1150	**C122_4.9 S2 M2SA2**	126	**C122_4.9 P80 BN80B2**	127
651	16	2.3	4.3	1110	**C122_4.3 S2 M2SA2**	126	**C122_4.3 P80 BN80B2**	127
767	13	2.6	3.7	1070	**C122_3.7 S2 M2SA2**	126	**C122_3.7 P80 BN80B2**	127
875	12	1.5	3.2	1020	**C122_3.2 S2 M2SA2**	126	**C122_3.2 P80 BN80B2**	127
1012	10	3.0	2.8	980	**C122_2.8 S2 M2SA2**	126	**C122_2.8 P80 BN80B2**	127

1.5 kW

n_2 min^{-1}	M_2 Nm	S	i	R_{n2} N			IEC	
1.0	12595	1.0	908.2	85000	**C1004_908.2 S3 M3LA6**	163	**C1004_908.2 P100 BN100LA6**	164
1.3	9994	1.2	1081	85000	**C1004_1081 S3 M3SA4**	163	**C1004_1081 P90 BN90LA4**	164
1.6	8397	1.4	908.2	85000	**C1004_908.2 S3 M3SA4**	163	**C1004_908.2 P90 BN90LA4**	164
1.7	7803	0.9	844.0	60000	**C904_844.0 S3 M3SA4**	160	**C904_844.0 P90 BN90LA4**	161
2.0	6659	1.8	720.3	85000	**C1004_720.3 S3 M3SA4**	163	**C1004_720.3 P90 BN90LA4**	164
2.0	6584	1.1	712.2	60000	**C904_712.2 S3 M3SA4**	160	**C904_712.2 P90 BN90LA4**	161
2.6	4939	1.5	534.2	60000	**C904_534.2 S3 M3SA4**	160	**C904_534.2 P90 BN90LA4**	161
3.1	4226	1.7	457.1	60000	**C904_457.1 S3 M3SA4**	160	**C904_457.1 P90 BN90LA4**	161
3.1	4210	1.0	455.4	35000	**C804_455.4 S3 M3SA4**	157	**C804_455.4 P90 BN90LA4**	158

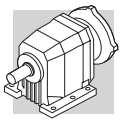

1.5 kW

n_2 min^{-1}	M_2 Nm	S	i	R_{n2} N			IEC	
3.4	3874	1.9	419.0	60000	**C904_419.0 S3 M3SA4**	160	**C904_419.0 P90 BN90LA4**	161
3.4	3860	1.0	417.5	35000	**C804_417.5 S3 M3SA4**	157	**C804_417.5 P90 BN90LA4**	158
4.2	3134	2.3	339.0	60000	**C904_339.0 S3 M3SA4**	160	**C904_339.0 P90 BN90LA4**	161
4.2	3091	1.3	334.3	35000	**C804_334.3 S3 M3SA4**	157	**C804_334.3 P90 BN90LA4**	158
4.8	2708	2.7	292.9	60000	**C904_292.9 S3 M3SA4**	160	**C904_292.9 P90 BN90LA4**	161
4.9	2641	1.5	285.7	35000	**C804_285.7 S3 M3SA4**	157	**C804_285.7 P90 BN90LA4**	158
5.2	2517	0.9	272.2	25000	**C704_272.2 S3 M3SA4**	154	**C704_272.2 P90 BN90LA4**	155
5.4	2421	1.7	261.9	35000	**C804_261.9 S3 M3SA4**	157	**C804_261.9 P90 BN90LA4**	158
5.6	2323	1.0	251.3	25000	**C704_251.3 S3 M3SA4**	154	**C704_251.3 P90 BN90LA4**	155
5.9	2261	1.0	239.3	25000	**C703_239.3 S3 M3SA4**	154	**C703_239.3 P90 BN90LA4**	155
6.5	2010	0.8	217.4	16000	**C614_217.4 S3 M3SA4**	150	**C614_217.4 P90 BN90LA4**	151
6.5	2039	2.0	215.8	35000	**C803_215.8 S3 M3SA4**	157	**C803_215.8 P90 BN90LA4**	158
7.3	1834	1.3	194.1	25000	**C703_194.1 S3 M3SA4**	154	**C703_194.1 P90 BN90LA4**	155
7.9	1693	1.4	179.2	25000	**C703_179.2 S3 M3SA4**	154	**C703_179.2 P90 BN90LA4**	155
7.9	1687	0.9	178.6	16000	**C613_178.6 S3 M3SA4**	150	**C613_178.6 P90 BN90LA4**	151
8.3	1597	2.5	169.0	35000	**C803_169.0 S3 M3SA4**	157	**C803_169.0 P90 BN90LA4**	158
8.6	1554	1.0	164.5	16000	**C613_164.5 S3 M3SA4**	150	**C613_164.5 P90 BN90LA4**	151
9.4	1420	1.6	150.3	25000	**C703_150.3 S3 M3SA4**	154	**C703_150.3 P90 BN90LA4**	155
9.4	1418	1.1	150.0	16000	**C613_150.0 S3 M3SA4**	150	**C613_150.0 P90 BN90LA4**	151
9.5	1409	2.8	149.1	35000	**C803_149.1 S3 M3SA4**	157	**C803_149.1 P90 BN90LA4**	158
10.0	1327	1.2	140.5	16000	**C613_140.5 S3 M3SA4**	150	**C613_140.5 P90 BN90LA4**	151
10.3	1298	1.8	137.4	25000	**C703_137.4 S3 M3SA4**	154	**C703_137.4 P90 BN90LA4**	155
10.3	1291	3.1	136.7	35000	**C803_136.7 S3 M3SA4**	157	**C803_136.7 P90 BN90LA4**	158
11.0	1211	1.3	128.1	16000	**C613_128.1 S3 M3SA4**	150	**C613_128.1 P90 BN90LA4**	151
11.1	1198	1.9	126.8	25000	**C703_126.8 S3 M3SA4**	154	**C703_126.8 P90 BN90LA4**	155
12.4	1073	1.5	113.6	16000	**C613_113.6 S3 M3SA4**	150	**C613_113.6 P90 BN90LA4**	151
12.4	1073	0.9	113.6	10000	**C513_113.6 S3 M3SA4**	146	**C513_113.6 P90 BN90LA4**	147
13.6	981	2.3	103.8	25000	**C703_103.8 S3 M3SA4**	154	**C703_103.8 P90 BN90LA4**	155
13.6	979	1.6	103.6	16000	**C613_103.6 S3 M3SA4**	150	**C613_103.6 P90 BN90LA4**	151
13.8	962	1.0	101.8	10000	**C513_101.8 S3 M3SA4**	146	**C513_101.8 P90 BN90LA4**	147
15.2	878	1.1	93.0	10000	**C513_93.0 S3 M3SA4**	146	**C513_93.0 P90 BN90LA4**	147
15.5	860	1.9	91.0	16000	**C613_91.0 S3 M3SA4**	150	**C613_91.0 P90 BN90LA4**	151
16.0	833	2.8	88.2	25000	**C703_88.2 S3 M3SA4**	154	**C703_88.2 P90 BN90LA4**	155
16.5	826	1.0	57.0	10000	**C512_57.0 S3 M3LA6**	146	**C512_57.0 P100 BN100LA6**	147
17.0	785	2.0	83.0	16000	**C613_83.0 S3 M3SA4**	150	**C613_83.0 P90 BN90LA4**	151
17.3	769	3.0	81.4	25000	**C703_81.4 S3 M3SA4**	154	**C703_81.4 P90 BN90LA4**	155
17.7	755	1.3	79.9	10000	**C513_79.9 S3 M3SA4**	146	**C513_79.9 P90 BN90LA4**	147
18.3	744	1.0	51.4	10000	**C512_51.4 S3 M3LA6**	146	**C512_51.4 P100 BN100LA6**	147
19.0	701	2.3	74.2	16000	**C613_74.2 S3 M3SA4**	150	**C613_74.2 P90 BN90LA4**	151
19.3	689	1.5	72.9	10000	**C513_72.9 S3 M3SA4**	146	**C513_72.9 P90 BN90LA4**	147
19.7	692	1.2	47.8	10000	**C512_47.8 S3 M3LA6**	146	**C512_47.8 P100 BN100LA6**	147
19.8	674	3.4	71.3	25000	**C703_71.3 S3 M3SA4**	154	**C703_71.3 P90 BN90LA4**	155
20.8	640	2.5	67.7	16000	**C613_67.7 S3 M3SA4**	150	**C613_67.7 P90 BN90LA4**	151
21.8	624	1.3	43.1	10000	**C512_43.1 S3 M3LA6**	146	**C512_43.1 P100 BN100LA6**	147
21.8	610	1.6	64.6	10000	**C513_64.6 S3 M3SA4**	146	**C513_64.6 P90 BN90LA4**	147
21.9	607	1.0	64.3	7000	**C413_64.3 S3 M3SA4**	142	**C413_64.3 P90 BN90LA4**	143
23.9	557	1.8	59.0	10000	**C513_59.0 S3 M3SA4**	146	**C513_59.0 P90 BN90LA4**	147
24.0	554	1.1	58.7	7000	**C413_58.7 S3 M3SA4**	142	**C413_58.7 P90 BN90LA4**	143
24.1	554	2.9	58.6	16000	**C613_58.6 S3 M3SA4**	150	**C613_58.6 P90 BN90LA4**	151
24.7	550	1.4	57.0	10000	**C512_57.0 S3 M3SA4**	146	**C512_57.0 P90 BN90LA4**	147
26.4	505	3.2	53.5	16000	**C613_53.5 S3 M3SA4**	150	**C613_53.5 P90 BN90LA4**	151

1.5 kW

n_2 min^{-1}	M_2 Nm	S	i	R_{n2} N			IEC	
27.4	486	1.2	51.5	7000	**C413_51.5 S3 M3SA4**	142	**C413_51.5 P90 BN90LA4**	143
27.4	496	1.4	51.4	10000	**C512_51.4 S3 M3SA4**	146	**C512_51.4 P90 BN90LA4**	147
27.6	483	2.1	51.2	10000	**C513_51.2 S3 M3SA4**	146	**C513_51.2 P90 BN90LA4**	147
29.3	457	1.0	48.2	6290	**C363_48.2 S3 M3SA4**	138	**C363_48.2 P90 BN90LA4**	139
29.5	462	1.7	47.8	10000	**C512_47.8 S3 M3SA4**	146	**C512_47.8 P90 BN90LA4**	147
30	444	1.4	47.0	7000	**C413_47.0 S3 M3SA4**	142	**C413_47.0 P90 BN90LA4**	143
30	441	2.3	46.7	10000	**C513_46.7 S3 M3SA4**	146	**C513_46.7 P90 BN90LA4**	147
32	432	1.2	44.8	7000	**C412_44.8 S3 M3SA4**	142	**C412_44.8 P90 BN90LA4**	143
32	412	1.1	43.5	6110	**C363_43.5 S3 M3SA4**	138	**C363_43.5 P90 BN90LA4**	139
33	416	1.9	43.1	10000	**C512_43.1 S3 M3SA4**	146	**C512_43.1 P90 BN90LA4**	147
35	382	2.6	40.5	10000	**C513_40.5 S3 M3SA4**	146	**C513_40.5 P90 BN90LA4**	147
35	390	2.0	40.4	10000	**C512_40.4 S3 M3SA4**	146	**C512_40.4 P90 BN90LA4**	147
35	381	1.6	40.3	7000	**C413_40.3 S3 M3SA4**	142	**C413_40.3 P90 BN90LA4**	143
37	361	1.2	38.1	6110	**C363_38.1 S3 M3SA4**	138	**C363_38.1 P90 BN90LA4**	139
38	358	1.4	37.1	7000	**C412_37.1 S3 M3SA4**	142	**C412_37.1 P90 BN90LA4**	143
38	348	1.7	36.8	7000	**C413_36.8 S3 M3SA4**	142	**C413_36.8 P90 BN90LA4**	143
39	351	2.2	36.4	10000	**C512_36.4 S3 M3SA4**	146	**C512_36.4 P90 BN90LA4**	147
39	350	0.9	36.1	5100	**C322_36.1 S3 M3SA4**	134	**C322_36.1 P90 BN90LA4**	135
41	328	1.4	34.6	5950	**C363_34.6 S3 M3SA4**	138	**C363_34.6 P90 BN90LA4**	139
42	322	1.6	33.4	7000	**C412_33.4 S3 M3SA4**	142	**C412_33.4 P90 BN90LA4**	143
43	319	2.5	33.0	10000	**C512_33.0 S3 M3SA4**	146	**C512_33.0 P90 BN90LA4**	147
43	321	0.9	33.1	5050	**C322_33.1 S3 M3SA4**	134	**C322_33.1 P90 BN90LA4**	135
45	303	1.6	31.4	6990	**C412_31.4 S3 M3SA4**	142	**C412_31.4 P90 BN90LA4**	143
45	295	1.9	31.2	7000	**C413_31.2 S3 M3SA4**	142	**C413_31.2 P90 BN90LA4**	143
47	287	2.8	29.8	10000	**C512_29.8 S3 M3SA4**	146	**C512_29.8 P90 BN90LA4**	147
47	288	1.0	29.8	4970	**C322_29.8 S3 M3SA4**	134	**C322_29.8 P90 BN90LA4**	135
49	272	1.7	28.7	5830	**C363_28.7 S3 M3SA4**	138	**C363_28.7 P90 BN90LA4**	139
50	273	1.8	28.3	6830	**C412_28.3 S3 M3SA4**	142	**C412_28.3 P90 BN90LA4**	143
52	261	1.2	26.9	4890	**C322_26.9 S3 M3SA4**	134	**C322_26.9 P90 BN90LA4**	135
54	250	3.2	25.9	10000	**C512_25.9 S3 M3SA4**	146	**C512_25.9 P90 BN90LA4**	147
54	249	1.8	26.2	5710	**C363_26.2 S3 M3SA4**	138	**C363_26.2 P90 BN90LA4**	139
56	242	2.1	25.0	6680	**C412_25.0 S3 M3SA4**	142	**C412_25.0 P90 BN90LA4**	143
56	243	1.2	25.1	4840	**C322_25.1 S3 M3SA4**	134	**C322_25.1 P90 BN90LA4**	135
62	222	1.3	22.9	4750	**C322_22.9 S3 M3SA4**	134	**C322_22.9 P90 BN90LA4**	135
63	218	2.3	22.6	6510	**C412_22.6 S3 M3SA4**	142	**C412_22.6 P90 BN90LA4**	143
64	210	2.0	22.1	5530	**C363_22.1 S3 M3SA4**	138	**C363_22.1 P90 BN90LA4**	139
66	208	0.9	21.5	2600	**C222_21.5 S3 M3SA4**	130	**C222_21.5 P90 BN90LA4**	131
70	195	1.5	20.1	4650	**C322_20.1 S3 M3SA4**	134	**C322_20.1 P90 BN90LA4**	135
70	194	1.0	20.0	2740	**C222_20.0 S3 M3SA4**	130	**C222_20.0 P90 BN90LA4**	131
71	191	2.5	19.8	6330	**C412_19.8 S3 M3SA4**	142	**C412_19.8 P90 BN90LA4**	143
74	184	2.1	19.0	5330	**C362_19.0 S3 M3SA4**	138	**C362_19.0 P90 BN90LA4**	139
78	176	1.6	18.2	4520	**C322_18.2 S3 M3SA4**	134	**C322_18.2 P90 BN90LA4**	135
78	176	1.0	18.1	2700	**C222_18.1 S3 M3SA4**	130	**C222_18.1 P90 BN90LA4**	131
79	172	2.8	17.8	6160	**C412_17.8 S3 M3SA4**	142	**C412_17.8 P90 BN90LA4**	143
82	167	2.3	17.2	5140	**C362_17.2 S3 M3SA4**	138	**C362_17.2 P90 BN90LA4**	139
89	153	2.9	15.8	6000	**C412_15.8 S3 M3SA4**	142	**C412_15.8 P90 BN90LA4**	143
89	153	1.1	15.8	2700	**C222_15.8 S3 M3SA4**	130	**C222_15.8 P90 BN90LA4**	131
90	151	1.8	15.6	4410	**C322_15.6 S3 M3SA4**	134	**C322_15.6 P90 BN90LA4**	135
96	143	2.7	14.8	5030	**C362_14.8 S3 M3SA4**	138	**C362_14.8 P90 BN90LA4**	139
97	141	1.2	14.5	2700	**C222_14.5 S3 M3SA4**	130	**C222_14.5 P90 BN90LA4**	131
99	137	3.2	14.2	5830	**C412_14.2 S3 M3SA4**	142	**C412_14.2 P90 BN90LA4**	143

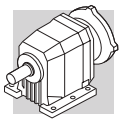

1.5 kW

n_2 min^{-1}	M_2 Nm	S	i	R_{n2} N			IEC	
100	136	1.8	14.1	4280	**C322_14.1 S3 M3SA4**	134	**C322_14.1 P90 BN90LA4**	135
106	129	2.9	13.3	4890	**C362_13.3 S3 M3SA4**	138	**C362_13.3 P90 BN90LA4**	139
114	120	1.3	12.4	2630	**C222_12.4 S3 M3SA4**	130	**C222_12.4 P90 BN90LA4**	131
114	119	2.1	12.3	4180	**C322_12.3 S3 M3SA4**	134	**C322_12.3 P90 BN90LA4**	135
121	113	3.4	11.7	4740	**C362_11.7 S3 M3SA4**	138	**C362_11.7 P90 BN90LA4**	139
126	109	2.1	11.2	4050	**C322_11.2 S3 M3SA4**	134	**C322_11.2 P90 BN90LA4**	135
127	107	1.4	11.1	2600	**C222_11.1 S3 M3SA4**	130	**C222_11.1 P90 BN90LA4**	131
146	93	1.6	9.6	2530	**C222_9.6 S3 M3SA4**	130	**C222_9.6 P90 BN90LA4**	131
152	90	2.4	9.3	3900	**C322_9.3 S3 M3SA4**	134	**C322_9.3 P90 BN90LA4**	135
163	84	1.6	8.7	2470	**C222_8.7 S3 M3SA4**	130	**C222_8.7 P90 BN90LA4**	131
166	82	2.5	8.5	3790	**C322_8.5 S3 M3SA4**	134	**C322_8.5 P90 BN90LA4**	135
177	77	1.8	15.8	2440	**C222_15.8 S2 M2SB2**	130	**C222_15.8 P90 BN90SA2**	131
190	72	2.3	5.0	3610	**C322_5.0 S3 M3LA6**	134	**C322_5.0 P100 BN100LA6**	135
197	69	2.9	7.2	3640	**C322_7.2 S3 M3SA4**	134	**C322_7.2 P90 BN90LA4**	135
199	69	1.9	7.1	2380	**C222_7.1 S3 M3SA4**	130	**C222_7.1 P90 BN90LA4**	131
203	67	3.0	4.6	4050	**C362_4.6 S3 M3LA6**	138	**C362_4.6 P100 BN100LA6**	139
225	61	2.6	6.3	3450	**C322_6.3 S3 M3SA4**	134	**C322_6.3 P90 BN90LA4**	135
226	60	0.9	6.2	600	**C122_6.2 S3 M3SA4**	126	**C122_6.2 P90 BN90LA4**	127
232	59	1.8	6.1	2250	**C222_6.1 S3 M3SA4**	130	**C222_6.1 P90 BN90LA4**	131
235	58	0.9	11.9	1250	**C122_11.9 S2 M2SB2**	126	**C122_11.9 P90 BN90SA2**	127
249	55	2.8	5.7	3320	**C322_5.7 S3 M3SA4**	134	**C322_5.7 P90 BN90LA4**	135
252	54	0.9	5.6	720	**C122_5.6 S3 M3SA4**	126	**C122_5.6 P90 BN90LA4**	127
252	54	1.9	5.6	2200	**C222_5.6 S3 M3SA4**	130	**C222_5.6 P90 BN90LA4**	131
254	54	2.0	3.7	2210	**C222_3.7 S3 M3LA6**	130	**C222_3.7 P100 BN100LA6**	131
278	49	1.0	10.1	1340	**C122_10.1 S2 M2SB2**	126	**C122_10.1 P90 BN90SA2**	127
285	48	3.2	5.0	3240	**C322_5.0 S3 M3SA4**	134	**C322_5.0 P90 BN90LA4**	135
285	48	2.1	3.3	2120	**C222_3.7 S3 M3LA6**	130	**C222_3.7 P100 BN100LA6**	131
290	47	1.0	4.9	840	**C122_4.9 S3 M3SA4**	126	**C122_4.9 P90 BN90LA4**	127
296	46	2.2	4.8	2140	**C222_4.8 S3 M3SA4**	130	**C222_4.8 P90 BN90LA4**	131
318	43	1.1	8.8	1300	**C122_8.8 S2 M2SB2**	126	**C122_8.8 P90 BN90SA2**	127
322	42	2.6	8.7	2130	**C222_8.7 S2 M2SB2**	130	**C222_8.7 P90 BN90SA2**	131
327	42	1.1	4.3	930	**C122_4.3 S3 M3SA4**	126	**C122_4.3 P90 BN90LA4**	127
331	41	2.3	4.3	2100	**C222_4.3 S3 M3SA4**	130	**C222_4.3 P90 BN90LA4**	131
340	40	1.1	2.8	1000	**C122_2.8 S3 M3LA6**	126	**C122_2.8 P100 BN100LA6**	127
345	39	2.4	2.7	2060	**C222_2.7 S3 M3LA6**	130	**C222_2.7 P100 BN100LA6**	131
367	37	1.2	7.6	1270	**C122_7.6 S2 M2SB2**	126	**C122_7.6 P90 BN90SA2**	127
380	36	2.5	3.7	2020	**C222_3.7 S3 M3SA4**	130	**C222_3.7 P90 BN90LA4**	131
386	35	1.2	3.7	1100	**C122_3.7 S3 M3SA4**	126	**C122_3.7 P90 BN90LA4**	127
395	34	3.1	7.1	2030	**C222_7.1 S2 M2SB2**	130	**C222_7.1 P90 BN90SA2**	131
424	32	2.6	3.3	2000	**C222_3.3 S3 M3SA4**	130	**C222_3.3 P90 BN90LA4**	131
440	31	1.3	3.2	1120	**C122_3.2 S3 M3SA4**	126	**C122_3.2 P90 BN90LA4**	127
449	30	1.4	6.2	1180	**C122_6.2 S2 M2SB2**	126	**C122_6.2 P90 BN90SA2**	127
460	30	2.9	6.1	1920	**C222_6.1 S2 M2SB2**	130	**C222_6.1 P90 BN90SA2**	131
500	27	3.0	5.6	1860	**C222_5.6 S2 M2SB2**	130	**C222_5.6 P90 BN90SA2**	131
500	27	1.5	5.6	1140	**C122_5.6 S2 M2SB2**	126	**C122_5.6 P90 BN90SA2**	127
510	27	1.4	2.8	1140	**C122_2.8 S3 M3SA4**	126	**C122_2.8 P90 BN90LA4**	127
518	26	3.0	2.7	1870	**C222_2.7 S3 M3SA4**	130	**C222_2.7 P90 BN90LA4**	131
575	24	1.6	4.9	1110	**C122_4.9 S2 M2SB2**	126	**C122_4.9 P90 BN90SA2**	127
587	23	3.5	4.8	1810	**C222_4.8 S2 M2SB2**	130	**C222_4.8 P90 BN90SA2**	131
651	21	1.7	4.3	1070	**C122_4.3 S2 M2SB2**	126	**C122_4.3 P90 BN90SA2**	127
767	18	1.9	3.7	1030	**C122_3.7 S2 M2SB2**	126	**C122_3.7 P90 BN90SA2**	127

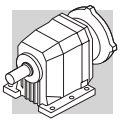

1.5 kW

n_2 min^{-1}	M_2 Nm	S	i	R_{n2} N			IEC	
875	16	2.1	3.2	990	**C122_3.2 S2 M2SB2**	126	**C122_3.2 P90 BN90SA2**	127
1012	13	2.2	2.8	960	**C122_2.8 S2 M2SB2**	126	**C122_2.8 P90 BN90SA2**	127

2.2 kW

n_2 min^{-1}	M_2 Nm	S	i	R_{n2} N			IEC	
1.6	12315	1.0	908.2	85000	**C1004_908.2 S3 M3LA4**	163	**C1004_908.2 P100 BN100LA4**	164
2.0	9767	1.2	720.3	85000	**C1004_720.3 S3 M3LA4**	163	**C1004_720.3 P100 BN100LA4**	164
2.4	7900	1.5	582.6	85000	**C1004_582.6 S3 M3LA4**	163	**C1004_582.6 P100 BN100LA4**	164
2.6	7244	1.0	534.2	60000	**C904_534.2 S3 M3LA4**	160	**C904_534.2 P100 BN100LA4**	161
3.1	6198	1.2	457.1	60000	**C904_457.1 S3 M3LA4**	160	**C904_457.1 P100 BN100LA4**	161
3.7	5159	2.3	380.5	85000	**C1004_380.5 S3 M3LA4**	163	**C1004_380.5 P100 BN100LA4**	164
3.8	5014	1.4	369.8	60000	**C904_369.8 S3 M3LA4**	160	**C904_369.8 P100 BN100LA4**	161
4.8	3972	1.8	292.9	60000	**C904_292.9 S3 M3LA4**	160	**C904_292.9 P100 BN100LA4**	161
4.9	3874	1.0	285.7	35000	**C804_285.7 S3 M3LA4**	157	**C804_285.7 P100 BN100LA4**	158
5.4	3551	1.1	261.9	35000	**C804_261.9 S3 M3LA4**	157	**C804_261.9 P100 BN100LA4**	158
6.1	3142	2.3	231.7	60000	**C904_231.7 S3 M3LA4**	160	**C904_231.7 P100 BN100LA4**	161
6.5	2991	1.3	215.8	35000	**C803_215.8 S3 M3LA4**	157	**C803_215.8 P100 BN100LA4**	158
7.6	2555	1.6	184.4	35000	**C803_184.4 S3 M3LA4**	157	**C803_184.4 P100 BN100LA4**	158
7.9	2483	0.9	179.2	25000	**C703_179.2 S3 M3LA4**	154	**C703_179.2 P100 BN100LA4**	155
8.7	2256	1.0	162.8	25000	**C703_162.8 S3 M3LA4**	154	**C703_162.8 P100 BN100LA4**	155
10.3	1904	1.2	137.4	25000	**C703_137.4 S3 M3LA4**	154	**C703_137.4 P100 BN100LA4**	155
10.3	1894	2.1	136.7	35000	**C803_136.7 S3 M3LA4**	157	**C803_136.7 P100 BN100LA4**	158
11.0	1776	0.9	128.1	16000	**C613_128.1 S3 M3LA4**	150	**C613_128.1 P100 BN100LA4**	151
12.4	1574	1.0	113.6	16000	**C613_113.6 S3 M3LA4**	150	**C613_113.6 P100 BN100LA4**	151
12.5	1558	1.5	112.4	25000	**C703_112.4 S3 M3LA4**	154	**C703_112.4 P100 BN100LA4**	155
12.9	1517	2.6	109.5	35000	**C803_109.5 S3 M3LA4**	157	**C803_109.5 P100 BN100LA4**	158
13.6	1438	1.6	103.8	25000	**C703_103.8 S3 M3LA4**	154	**C703_103.8 P100 BN100LA4**	155
13.6	1436	1.1	103.6	16000	**C613_103.6 S3 M3LA4**	150	**C613_103.6 P100 BN100LA4**	151
14.5	1350	3.0	97.4	35000	**C803_97.4 S3 M3LA4**	157	**C803_97.4 P100 BN100LA4**	158
15.5	1261	1.3	91.0	16000	**C613_91.0 S3 M3LA4**	150	**C613_91.0 P100 BN100LA4**	151
15.8	1237	3.2	89.3	35000	**C803_89.3 S3 M3LA4**	157	**C803_89.3 P100 BN100LA4**	158
16.0	1222	1.9	88.2	25000	**C703_88.2 S3 M3LA4**	154	**C703_88.2 P100 BN100LA4**	155
17.0	1151	1.4	83.0	16000	**C613_83.0 S3 M3LA4**	150	**C613_83.0 P100 BN100LA4**	151
17.3	1128	2.0	81.4	25000	**C703_81.4 S3 M3LA4**	154	**C703_81.4 P100 BN100LA4**	155
17.7	1107	0.9	79.9	10000	**C513_79.9 S3 M3LA4**	146	**C513_79.9 P100 BN100LA4**	147
19.0	1028	1.6	74.2	16000	**C613_74.2 S3 M3LA4**	150	**C613_74.2 P100 BN100LA4**	151
19.3	1011	1.0	72.9	10000	**C513_72.9 S3 M3LA4**	146	**C513_72.9 P100 BN100LA4**	147
19.8	989	2.3	71.3	25000	**C703_71.3 S3 M3LA4**	154	**C703_71.3 P100 BN100LA4**	155
20.8	938	1.7	67.7	16000	**C613_67.7 S3 M3LA4**	150	**C613_67.7 P100 BN100LA4**	151
21.4	913	2.5	65.9	25000	**C703_65.9 S3 M3LA4**	154	**C703_65.9 P100 BN100LA4**	155
21.8	895	1.1	64.6	10000	**C513_64.6 S3 M3LA4**	146	**C513_64.6 P100 BN100LA4**	147
23.9	817	1.2	59.0	10000	**C513_59.0 S3 M3LA4**	146	**C513_59.0 P100 BN100LA4**	147
24.1	812	2.0	58.6	16000	**C613_58.6 S3 M3LA4**	150	**C613_58.6 P100 BN100LA4**	151
24.7	807	1.0	57.0	10000	**C512_57.0 S3 M3LA4**	146	**C512_57.0 P100 BN100LA4**	147
25.0	783	2.9	56.5	25000	**C703_56.5 S3 M3LA4**	154	**C703_56.5 P100 BN100LA4**	155
26.4	741	2.2	53.5	16000	**C613_53.5 S3 M3LA4**	150	**C613_53.5 P100 BN100LA4**	151
27.4	728	1.0	51.4	10000	**C512_51.4 S3 M3LA4**	146	**C512_51.4 P100 BN100LA4**	147

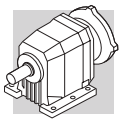

2.2 kW

n_2 min^{-1}	M_2 Nm	S	i	R_{n2} N			IEC	
27.6	709	1.4	51.2	10000	**C513_51.2 S3 M3LA4**	146	**C513_51.2 P100 BN100LA4**	147
29.5	677	1.2	47.8	10000	**C512_47.8 S3 M3LA4**	146	**C512_47.8 P100 BN100LA4**	147
29.6	660	2.4	47.6	16000	**C613_47.6 S3 M3LA4**	150	**C613_47.6 P100 BN100LA4**	151
30	651	0.9	47.0	6440	**C413_47.0 S3 M3LA4**	142	**C413_47.0 P100 BN100LA4**	143
30	647	1.5	46.7	10000	**C513_46.7 S3 M3LA4**	146	**C513_46.7 P100 BN100LA4**	147
32	602	2.7	43.4	16000	**C613_43.4 S3 M3LA4**	150	**C613_43.4 P100 BN100LA4**	151
33	610	1.3	43.1	10000	**C512_43.1 S3 M3LA4**	146	**C512_43.1 P100 BN100LA4**	147
35	561	1.8	40.5	10000	**C513_40.5 S3 M3LA4**	146	**C513_40.5 P100 BN100LA4**	147
35	571	1.4	40.4	10000	**C512_40.4 S3 M3LA4**	146	**C512_40.4 P100 BN100LA4**	147
35	559	1.1	40.3	6460	**C413_40.3 S3 M3LA4**	142	**C413_40.3 P100 BN100LA4**	143
37	538	2.5	38.0	16000	**C612_38.0 S3 M3LA4**	150	**C612_38.0 P100 BN100LA4**	151
38	525	1.0	37.1	6370	**C412_37.1 S3 M3LA4**	142	**C412_37.1 P100 BN100LA4**	143
38	512	2.0	37.0	10000	**C513_37.0 S3 M3LA4**	146	**C513_37.0 P100 BN100LA4**	147
38	510	1.2	36.8	6390	**C413_36.8 S3 M3LA4**	142	**C413_36.8 P100 BN100LA4**	143
39	515	1.5	36.4	10000	**C512_36.4 S3 M3LA4**	146	**C512_36.4 P100 BN100LA4**	147
39	501	3.1	36.1	16000	**C613_36.1 S3 M3LA4**	150	**C613_36.1 P100 BN100LA4**	151
41	484	2.5	34.2	16000	**C612_34.2 S3 M3LA4**	150	**C612_34.2 P100 BN100LA4**	151
41	479	0.9	34.6	5350	**C363_34.6 S3 M3LA4**	138	**C363_34.6 P100 BN100LA4**	139
42	473	1.1	33.4	6290	**C412_33.4 S3 M3LA4**	142	**C412_33.4 P100 BN100LA4**	143
43	468	1.7	33.0	10000	**C512_33.0 S3 M3LA4**	146	**C512_33.0 P100 BN100LA4**	147
43	457	3.3	33.0	16000	**C613_33.0 S3 M3LA4**	150	**C613_33.0 P100 BN100LA4**	151
45	445	1.1	31.4	6290	**C412_31.4 S3 M3LA4**	142	**C412_31.4 P100 BN100LA4**	143
46	431	3.1	30.4	16000	**C612_30.4 S3 M3LA4**	150	**C612_30.4 P100 BN100LA4**	151
47	421	1.9	29.8	10000	**C512_29.8 S3 M3LA4**	146	**C512_29.8 P100 BN100LA4**	147
49	398	1.1	28.7	5220	**C363_28.7 S3 M3LA4**	138	**C363_28.7 P100 BN100LA4**	139
50	401	1.2	28.3	6190	**C412_28.3 S3 M3LA4**	142	**C412_28.3 P100 BN100LA4**	143
51	388	3.5	27.4	15900	**C612_27.4 S3 M3LA4**	150	**C612_27.4 P100 BN100LA4**	151
54	367	2.2	25.9	10000	**C512_25.9 S3 M3LA4**	146	**C512_25.9 P100 BN100LA4**	147
54	363	1.2	26.2	5140	**C363_26.2 S3 M3LA4**	138	**C363_26.2 P100 BN100LA4**	139
56	355	0.8	25.1	4270	**C322_25.1 S3 M3LA4**	134	**C322_25.1 P100 BN100LA4**	135
56	355	1.4	25.0	6120	**C412_25.0 S3 M3LA4**	142	**C412_25.0 P100 BN100LA4**	143
60	331	2.4	23.4	10000	**C512_23.4 S3 M3LA4**	146	**C512_23.4 P100 BN100LA4**	147
62	324	0.9	22.9	4240	**C322_22.9 S3 M3LA4**	134	**C322_22.9 P100 BN100LA4**	135
63	319	1.6	22.6	6000	**C412_22.6 S3 M3LA4**	142	**C412_22.6 P100 BN100LA4**	143
64	307	1.4	22.1	5060	**C363_22.1 S3 M3LA4**	138	**C363_22.1 P100 BN100LA4**	139
66	308	0.9	14.1	4170	**C322_14.1 S3 M3LC6**	134	**C322_14.1 P112 BN112M6**	135
67	297	2.7	21.0	10000	**C512_21.0 S3 M3LA4**	146	**C512_21.0 P100 BN100LA4**	147
70	284	1.0	20.1	4200	**C322_20.1 S3 M3LA4**	134	**C322_20.1 P100 BN100LA4**	135
71	280	1.7	19.8	5890	**C412_19.8 S3 M3LA4**	142	**C412_19.8 P100 BN100LA4**	143
74	269	1.4	19.0	4920	**C362_19.0 S3 M3LA4**	138	**C362_19.0 P100 BN100LA4**	139
75	267	3.0	18.9	10000	**C512_18.9 S3 M3LA4**	146	**C512_18.9 P100 BN100LA4**	147
76	269	1.1	12.3	4100	**C322_12.3 S3 M3LC6**	134	**C322_12.3 P112 BN112M6**	135
78	257	1.1	18.2	4120	**C322_18.2 S3 M3LA4**	134	**C322_18.2 P100 BN100LA4**	135
79	252	1.9	17.8	5760	**C412_17.8 S3 M3LA4**	142	**C412_17.8 P100 BN100LA4**	143
82	244	1.6	17.2	4800	**C362_17.2 S3 M3LA4**	138	**C362_17.2 P100 BN100LA4**	139
83	245	1.1	11.2	4060	**C322_11.2 S3 M3LC6**	134	**C322_11.2 P112 BN112M6**	135
85	235	3.4	16.6	10000	**C512_16.6 S3 M3LA4**	146	**C512_16.6 P100 BN100LA4**	147
89	224	2.0	15.8	5650	**C412_15.8 S3 M3LA4**	142	**C412_15.8 P100 BN100LA4**	143
90	221	1.2	15.6	4060	**C322_15.6 S3 M3LA4**	134	**C322_15.6 P100 BN100LA4**	135
96	209	1.8	14.8	4710	**C362_14.8 S3 M3LA4**	138	**C362_14.8 P100 BN100LA4**	139
99	202	2.2	14.2	5510	**C412_14.2 S3 M3LA4**	142	**C412_14.2 P100 BN100LA4**	143

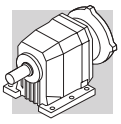

2.2 kW

n_2 min^{-1}	M_2 Nm	S	i	R_{n2} N			IEC	
100	203	1.3	9.3	3960	**C322_9.3 S3 M3LC6**	134	**C322_9.3 P112 BN112M6**	135
100	199	1.3	14.1	3980	**C322_14.1 S3 M3LA4**	134	**C322_14.1 P100 BN100LA4**	135
106	189	2.0	13.3	4590	**C362_13.3 S3 M3LA4**	138	**C362_13.3 P100 BN100LA4**	139
114	175	2.4	12.4	5360	**C412_12.4 S3 M3LA4**	142	**C412_12.4 P100 BN100LA4**	143
114	176	0.9	12.4	2270	**C222_12.4 S3 M3LA4**	130	**C222_12.4 P100 BN100LA4**	131
114	174	1.4	12.3	3900	**C322_12.3 S3 M3LA4**	134	**C322_12.3 P100 BN100LA4**	135
109	186	1.3	8.5	3890	**C322_8.5 S3 M3LC6**	134	**C322_8.5 P112 BN112M6**	135
121	165	2.3	11.7	4490	**C362_11.7 S3 M3LA4**	138	**C362_11.7 P100BN100LA4**	139
126	158	2.7	11.2	5220	**C412_11.2 S3 M3LA4**	142	**C412_11.2 P100 BN100LA4**	143
126	159	1.5	11.2	3800	**C322_11.2 S3 M3LA4**	134	**C322_11.2 P100 BN100LA4**	135
127	157	1.0	11.1	2250	**C222_11.1 S3 M3LA4**	130	**C222_11.1 P100 BN100LA4**	131
130	154	1.5	7.2	3810	**C322_7.2 S3 M3LC6**	134	**C322_7.2 P112 BN112M6**	135
131	152	1.0	7.1	2260	**C222_7.1 S3 M3LC6**	130	**C222_7.1 P112 BN112M6**	131
133	150	2.5	10.6	4320	**C362_10.6 S3 M3LA4**	138	**C362_10.6 P100 BN100LA4**	139
146	137	1.1	9.6	2250	**C222_9.6 S3 M3LA4**	130	**C222_9.6 P100 BN100LA4**	131
147	136	2.9	9.6	5050	**C412_9.6 S3 M3LA4**	142	**C412_9.6 P100 BN100LA4**	143
148	138	1.3	6.3	3510	**C322_6.3 S3 M3LC6**	134	**C322_6.3 P112 BN112M6**	135
152	132	1.7	9.3	3690	**C322_9.3 S3 M3LA4**	134	**C322_9.3 P100 BN100LA4**	135
160	125	3.1	8.8	4210	**C362_8.8 S3 M3LA4**	138	**C362_8.8 P100 BN100LA4**	139
163	123	1.1	8.7	2220	**C222_8.7 S3 M3LA4**	130	**C222_8.7 P100 BN100LA4**	131
163	125	1.4	5.7	3450	**C322_5.7 S3 M3LC6**	134	**C322_5.7 P112 BN112M6**	135
166	120	1.7	8.5	3600	**C322_8.5 S3 M3LA4**	134	**C322_8.5 P100 BN100LA4**	135
188	106	1.5	5.0	3410	**C322_5.0 S3 M3LC6**	134	**C322_5.0 P112 BN112M6**	135
197	101	2.0	7.2	3480	**C322_7.2 S3 M3LA4**	134	**C322_7.2 P100 BN100LA4**	135
199	100	1.3	7.1	2180	**C222_7.1 S3 M3LA4**	130	**C222_7.1 P100 BN100LA4**	131
225	89	1.7	6.3	3250	**C322_6.3 S3 M3LA4**	134	**C322_6.3 P100 BN100LA4**	135
232	86	1.2	6.1	2040	**C222_6.1 S3 M3LA4**	130	**C222_6.1 P100 BN100LA4**	131
241	83	2.4	5.8	3710	**C362_5.8 S3 M3LA4**	138	**C362_5.8 P100 BN100LA4**	139
249	80	1.9	5.7	3180	**C322_5.7 S3 M3LA4**	134	**C322_5.7 P100 BN100LA4**	135
252	79	1.3	5.6	2050	**C222_5.6 S3 M3LA4**	130	**C222_5.6 P100 BN100LA4**	131
267	75	2.7	5.3	3550	**C362_5.3 S3 M3LA4**	138	**C362_5.3 P100 BN100LA4**	139
285	70	2.2	5.0	3100	**C322_5.0 S3 M3LA4**	134	**C322_5.0 P100 BN100LA4**	135
296	68	1.5	4.8	1970	**C222_4.8 S3 M3LA4**	130	**C222_4.8 P100 BN100LA4**	131
302	66	2.7	9.3	3130	**C322_9.3 S3 M3SA2**	134	**C322_9.3 P90 BN90L2**	135
305	65	3.1	4.6	3490	**C362_4.6 S3 M3LA4**	138	**C362_4.6 P100 BN100LA4**	139
313	64	2.4	4.5	3000	**C322_4.5 S3 M3LA4**	134	**C322_4.5 P100 BN100LA4**	135
328	61	1.8	8.7	2000	**C222_8.7 S3 M3SA2**	130	**C222_8.7 P90 BN90L2**	131
331	60	1.6	4.3	1970	**C222_4.3 S3 M3LA4**	130	**C222_4.3 P100 BN100LA4**	131
335	60	2.8	8.5	3010	**C322_8.5 S3 M3SA2**	134	**C322_8.5 P90 BN90L2**	135
346	58	3.5	2.7	3380	**C362_2.7 S3 M3LC6**	138	**C362_2.7 P112 BN112M6**	139
369	54	0.8	7.6	930	**C122_7.6 S3 M3SA2**	126	**C122_7.6 P90 BN90L2**	127
377	53	2.8	3.7	2890	**C322_3.7 S3 M3LA4**	134	**C322_3.7 P100 BN100LA4**	135
380	52	1.7	3.7	1890	**C222_3.7 S3 M3LA4**	130	**C222_3.7 P100 BN100LA4**	131
392	51	3.1	7.2	2920	**C322_7.2 S3 M3SA2**	134	**C322_7.2 P90 BN90L2**	135
397	50	2.1	7.1	1920	**C222_7.1 S3 M3SA2**	130	**C222_7.1 P90 BN90L2**	131
414	48	2.9	3.4	2800	**C322_3.4 S3 M3LA4**	134	**C322_3.4 P100 BN100LA4**	135
424	47	1.8	3.3	1890	**C222_3.3 S3 M3LA4**	130	**C222_3.3 P100 BN100LA4**	131
440	45	0.9	3.2	580	**C122_3.2 S3 M3LA4**	126	**C122_3.2 P100 BN100LA4**	127
449	44	3.4	6.3	2760	**C322_6.3 S3 M3SA2**	134	**C322_6.3 P90 BN90L2**	135
462	43	2.0	6.1	1820	**C222_6.1 S3 M3SA2**	130	**C222_6.1 P90 BN90L2**	131
663	30	2.1	5.6	1770	**C222_5.6 S3 M3SA2**	130	**C222_5.6 P90 BN90L2**	131

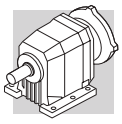

2.2 kW

n_2 min^{-1}	M_2 Nm	S	i	R_{n2} N			IEC	
490	41	3.2	2.9	2700	**C322_2.9 S3 M3LA4**	134	**C322_2.9 P100 BN100LA4**	135
510	39	0.9	2.8	690	**C122_2.8 S3 M3LA4**	126	**C122_2.8 P100 BN100LA4**	127
518	39	2.1	2.7	1770	**C222_2.7 S3 M3LA4**	130	**C222_2.7 P100 BN100LA4**	131
589	34	2.4	4.8	1720	**C222_4.8 S3 M3SA2**	130	**C222_4.8 P90 BN90L2**	131
663	30	2.5	4.3	1670	**C222_4.3 S3 M3SA2**	130	**C222_4.3 P90 BN90L2**	131
758	26	2.7	3.7	1620	**C222_3.7 S3 M3SA2**	130	**C222_3.7 P90 BN90L2**	131
770	26	1.3	3.7	970	**C122_3.7 S3 M3SA2**	126	**C122_3.7 P90 BN90L2**	127
864	23	2.9	3.3	1550	**C222_3.3 S3 M3SA2**	130	**C222_3.3 P90 BN90L2**	131
891	22	1.4	3.2	940	**C122_3.2 S3 M3SA2**	126	**C122_3.2 P90 BN90L2**	127
1015	20	1.5	2.8	920	**C122_2.8 S3 M3SA2**	126	**C122_2.8 P90 BN90L2**	127
1032	19	3.4	2.7	1490	**C222_2.7 S3 M3SA2**	130	**C222_2.7 P90 BN90L2**	131

3 kW

n_2 min^{-1}	M_2 Nm	S	i	R_{n2} N			IEC	
2.0	13319	0.9	720.3	85000	**C1004_720.3 S3 M3LB4**	163	**C1004_720.3 P100 BN100LB4**	164
2.4	10773	1.1	582.6	85000	**C1004_582.6 S3 M3LB4**	163	**C1004_582.6 P100 BN100LB4**	164
3.4	7747	0.9	419.0	60000	**C904_419.0 S3 M3LB4**	160	**C904_419.0 P100 BN100LB4**	161
3.4	7577	1.6	409.8	85000	**C1004_409.8 S3 M3LB4**	163	**C1004_409.8 P100 BN100LB4**	164
4.2	6268	1.1	339.0	60000	**C904_339.0 S3 M3LB4**	160	**C904_339.0 P100 BN100LB4**	161
4.4	5984	2.0	323.6	85000	**C1004_323.6 S3 M3LB4**	163	**C1004_323.6 P100 BN100LB4**	164
5.3	4965	1.5	268.5	60000	**C904_268.5 S3 M3LB4**	160	**C904_268.5 P100 BN100LB4**	161
5.4	4863	2.5	263.0	85000	**C1004_263.0 S3 M3LB4**	163	**C1004_263.0 P100 BN100LB4**	164
6.5	4079	1.0	215.8	35000	**C803_215.8 S3 M3LB4**	157	**C803_215.8 P100 BN100LB4**	158
6.6	3927	1.8	212.4	60000	**C904_212.4 S3 M3LB4**	160	**C904_212.4 P100 BN100LB4**	161
7.1	3739	1.0	197.9	35000	**C803_197.9 S3 M3LB4**	157	**C803_197.9 P100 BN100LB4**	158
8.2	3252	2.2	172.1	60000	**C903_172.1 S3 M3LB4**	160	**C903_172.1 P100 BN100LB4**	161
8.3	3193	1.3	169.0	35000	**C803_169.0 S3 M3LB4**	157	**C803_169.0 P100 BN100LB4**	158
9.5	2818	1.4	149.1	35000	**C803_149.1 S3 M3LB4**	157	**C803_149.1 P100 BN100LB4**	158
9.6	2765	2.6	146.3	60000	**C903_146.3 S3 M3LB4**	160	**C903_146.3 P100 BN100LB4**	161
10.5	2535	2.8	134.1	60000	**C903_134.1 S3 M3LB4**	160	**C903_134.1 P100 BN100LB4**	161
12.1	2206	3.3	116.7	60000	**C903_116.7 S3 M3LB4**	160	**C903_116.7 P100 BN100LB4**	161
12.5	2125	1.1	112.4	25000	**C703_112.4 S3 M3LB4**	154	**C703_112.4 P100 BN100LB4**	155
12.9	2069	1.9	109.5	35000	**C803_109.5 S3 M3LB4**	157	**C803_109.5 P100 BN100LB4**	158
13.6	1961	1.2	103.8	25000	**C703_103.8 S3 M3LB4**	154	**C703_103.8 P100 BN100LB4**	155
14.5	1840	2.2	97.4	35000	**C803_97.4 S3 M3LB4**	157	**C803_97.4 P100 BN100LB4**	158
15.5	1720	0.9	91.0	16000	**C613_91.0 S3 M3LB4**	150	**C613_91.0 P100 BN100LB4**	151
15.8	1687	2.4	89.3	35000	**C803_89.3 S3 M3LB4**	157	**C803_89.3 P100 BN100LB4**	158
16.0	1667	1.4	88.2	25000	**C703_88.2 S3 M3LB4**	154	**C703_88.2 P100 BN100LB4**	155
17.0	1569	1.0	83.0	16000	**C613_83.0 S3 M3LB4**	150	**C613_83.0 P100 BN100LB4**	151
17.3	1538	1.5	81.4	25000	**C703_81.4 S3 M3LB4**	154	**C703_81.4 P100 BN100LB4**	155
18.3	1453	2.8	76.9	35000	**C803_76.9 S3 M3LB4**	157	**C803_76.9 P100 BN100LB4**	158
19.0	1402	1.1	74.2	16000	**C613_74.2 S3 M3LB4**	150	**C613_74.2 P100 BN100LB4**	151
19.8	1348	1.7	71.3	25000	**C703_71.3 S3 M3LB4**	154	**C703_71.3 P100 BN100LB4**	155
20.0	1332	3.0	70.5	35000	**C803_70.5 S3 M3LB4**	157	**C803_70.5 P100 BN100LB4**	158
20.8	1279	1.3	67.7	16000	**C613_67.7 S3 M3LB4**	150	**C613_67.7 P100 BN100LB4**	151
24.1	1107	1.4	58.6	16000	**C613_58.6 S3 M3LB4**	150	**C613_58.6 P100 BN100LB4**	151
25.0	1068	2.2	56.5	25000	**C703_56.5 S3 M3LB4**	154	**C703_56.5 P100 BN100LB4**	155

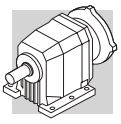

3 kW

n_2 min^{-1}	M_2 Nm	S	i	R_{n2} N			IEC	
26.4	1010	1.6	53.5	16000	**C613_53.5 S3 M3LB4**	150	**C613_53.5 P100 BN100LB4**	151
27.6	967	1.0	51.2	10000	**C513_51.2 S3 M3LB4**	146	**C513_51.2 P100 BN100LB4**	147
29.6	900	1.8	47.6	16000	**C613_47.6 S3 M3LB4**	150	**C613_47.6 P100 BN100LB4**	151
30	883	1.1	46.7	10000	**C513_46.7 S3 M3LB4**	146	**C513_46.7 P100 BN100LB4**	147
32	845	2.7	44.7	25000	**C703_44.7 S3 M3LB4**	154	**C703_44.7 P100 BN100LB4**	155
32	821	1.9	43.4	16000	**C613_43.4 S3 M3LB4**	150	**C613_43.4 P100 BN100LB4**	151
33	832	0.9	43.1	10000	**C512_43.1 S3 M3LB4**	146	**C512_43.1 P100 BN100LB4**	147
34	780	2.9	41.3	25000	**C703_41.3 S3 M3LB4**	154	**C703_41.3 P100 BN100LB4**	155
35	765	1.3	40.5	10000	**C513_40.5 S3 M3LB4**	146	**C513_40.5 P100 BN100LB4**	147
35	779	1.0	40.4	10000	**C512_40.4 S3 M3LB4**	146	**C512_40.4 P100 BN100LB4**	147
37	734	1.8	38.0	16000	**C612_38.0 S3 M3LB4**	150	**C612_38.0 P100 BN100LB4**	151
38	698	1.4	37.0	10000	**C513_37.0 S3 M3LB4**	146	**C513_37.0 P100 BN100LB4**	147
39	702	1.1	36.4	10000	**C512_36.4 S3 M3LB4**	146	**C512_36.4 P100 BN100LB4**	147
39	683	2.3	36.1	16000	**C613_36.1 S3 M3LB4**	150	**C613_36.1 P100 BN100LB4**	151
41	661	1.9	34.2	16000	**C612_34.2 S3 M3LB4**	150	**C612_34.2 P100 BN100LB4**	151
43	638	1.2	33.0	10000	**C512_33.0 S3 M3LB4**	146	**C512_33.0 P100 BN100LB4**	147
43	623	2.4	33.0	16000	**C613_33.0 S3 M3LB4**	150	**C613_33.0 P100 BN100LB4**	151
45	590	1.0	31.2	5550	**C413_31.2 S3 M3LB4**	142	**C413_31.2 P100 BN100LB4**	143
46	588	2.3	30.4	15900	**C612_30.4 S3 M3LB4**	150	**C612_30.4 P100 BN100LB4**	151
47	575	1.4	29.8	10000	**C512_29.8 S3 M3LB4**	146	**C512_29.8 P100 BN100LB4**	147
50	546	0.9	28.3	5460	**C412_28.3 S3 M3LB4**	142	**C412_28.3 P100 BN100LB4**	143
51	519	1.9	27.4	10000	**C513_27.4 S3 M3LB4**	146	**C513_27.4 P100 BN100LB4**	147
51	529	2.6	27.4	15400	**C612_27.4 S3 M3LB4**	150	**C612_27.4 P100 BN100LB4**	151
54	500	1.6	25.9	10000	**C512_25.9 S3 M3LB4**	146	**C512_25.9 P100 BN100LB4**	147
54	487	0.9	26.2	4500	**C363_26.2 S3 M3LB4**	138	**C363_26.2 P100 BN100LB4**	139
56	483	1.0	25.0	5480	**C412_25.0 S3 M3LB4**	142	**C412_25.0 P100 BN100LB4**	143
57	479	2.8	24.8	15100	**C612_24.8 S3 M3LB4**	150	**C612_24.8 P100 BN100LB4**	151
59	451	2.0	23.9	10000	**C513_23.9 S3 M3LB4**	146	**C513_23.9 P100 BN100LB4**	147
60	451	1.8	23.4	10000	**C512_23.4 S3 M3LB4**	146	**C512_23.4 P100 BN100LB4**	147
63	435	1.1	22.6	5420	**C412_22.6 S3 M3LB4**	142	**C412_22.6 P100 BN100LB4**	143
63	431	3.1	22.4	14600	**C612_22.4 S3 M3LB4**	150	**C612_22.4 P100 BN100LB4**	151
64	412	1.0	22.1	4530	**C363_22.1 S3 M3LB4**	138	**C363_22.1 P100 BN100LB4**	139
65	412	2.2	21.8	10000	**C513_21.8 S3 M3LB4**	146	**C513_21.8 P100 BN100LB4**	147
67	405	2.0	21.0	10000	**C512_21.0 S3 M3LB4**	146	**C512_21.0 P100 BN100LB4**	147
71	381	1.3	19.8	5390	**C412_19.8 S3 M3LB4**	142	**C412_19.8 P100 BN100LB4**	143
74	361	1.1	19.0	4450	**C362_19.0 S3 M3LB4**	138	**C362_19.0 P100 BN100LB4**	139
75	365	2.2	18.9	10000	**C512_18.9 S3 M3LB4**	146	**C512_18.9 P100 BN100LB4**	147
79	343	1.4	17.8	5300	**C412_17.8 S3 M3LB4**	142	**C412_17.8 P100 BN100LB4**	143
82	327	1.2	17.2	4400	**C362_17.2 S3 M3LB4**	138	**C362_17.2 P100 BN100LB4**	139
85	320	2.5	16.6	9790	**C512_16.6 S3 M3LB4**	146	**C512_16.6 P100 BN100LB4**	147
89	305	1.5	15.8	5240	**C412_15.8 S3 M3LB4**	142	**C412_15.8 P100 BN100LB4**	143
90	296	0.9	15.6	3680	**C322_15.6 S3 M3LB4**	134	**C322_15.6 P100 BN100LB4**	135
94	289	2.8	15.0	9540	**C512_15.0 S3 M3LB4**	146	**C512_15.0 P100 BN100LB4**	147
96	280	1.4	14.8	4340	**C362_14.8 S3 M3LB4**	138	**C362_14.8 P100 BN100LB4**	139
99	275	1.6	14.2	5140	**C412_14.2 S3 M3LB4**	142	**C412_14.2 P100 BN100LB4**	143
100	267	0.9	14.1	3650	**C322_14.1 S3 M3LB4**	134	**C322_14.1 P100 BN100LB4**	135
106	253	1.5	13.3	4260	**C362_13.3 S3 M3LB4**	138	**C362_13.3 P100 BN100LB4**	139
107	253	3.0	13.1	9200	**C512_13.1 S3 M3LB4**	146	**C512_13.1 P100 BN100LB4**	147
114	239	1.8	12.4	5040	**C412_12.4 S3 M3LB4**	142	**C412_12.4 P100 BN100LB4**	143
114	234	1.0	12.3	3580	**C322_12.3 S3 M3LB4**	134	**C322_12.3 P100 BN100LB4**	135
119	228	3.4	11.8	8950	**C512_11.8 S3 M3LB4**	146	**C512_11.8 P100 BN100LB4**	147

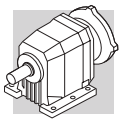

3 kW

n_2 min^{-1}	M_2 Nm	S	i	R_{n2} N			IEC	
121	222	1.7	11.7	4200	**C362_11.7 S3 M3LB4**	138	**C362_11.7 P100 BN100LB4**	139
126	215	1.9	11.2	4930	**C412_11.2 S3 M3LB4**	142	**C412_11.2 P100 BN100LB4**	143
126	213	1.1	11.2	3520	**C322_11.2 S3 M3LB4**	134	**C322_11.2 P100 BN100LB4**	135
133	201	1.9	10.6	4100	**C362_10.6 S3 M3LB4**	138	**C362_10.6 P100 BN100LB4**	139
142	191	1.2	20.1	3480	**C322_20.1 S3 M3LA2**	134	**C322_20.1 P100 BN100L2**	135
147	185	2.1	9.6	4800	**C412_9.6 S3 M3LB4**	142	**C412_9.6 P100 BN100LB4**	143
152	177	1.2	9.3	3450	**C322_9.3 S3 M3LB4**	134	**C322_9.3 P100 BN100LB4**	135
157	173	1.3	18.2	3410	**C322_18.2 S3 M3LA2**	134	**C322_18.2 P100 BN100L2**	135
160	167	2.3	8.8	3990	**C362_8.8 S3 M3LB4**	138	**C362_8.8 P100 BN100LB4**	139
166	161	1.3	8.5	3400	**C322_8.5 S3 M3LB4**	134	**C322_8.5 P100 BN100LB4**	135
176	153	2.4	8.0	3840	**C362_8.0 S3 M3LB4**	138	**C362_8.0 P100 BN100LB4**	139
181	151	0.9	15.8	1940	**C222_15.8 S3 M3LA2**	130	**C222_15.8 P100 BN100L2**	131
183	148	1.4	15.6	3340	**C322_15.6 S3 M3LA2**	134	**C322_15.6 P100 BN100L2**	135
197	136	1.5	7.2	3300	**C322_7.2 S3 M3LB4**	134	**C322_7.2 P100 BN100LB4**	135
199	135	1.0	7.1	1940	**C222_7.1 S3 M3LB4**	130	**C222_7.1 P100 BN100LB4**	131
200	136	2.6	7.1	4490	**C412_7.1 S3 M3LB4**	142	**C412_7.1 P100 BN100LB4**	143
203	134	1.5	14.1	3250	**C322_14.1 S3 M3LA2**	134	**C322_14.1 P100 BN100L2**	135
208	129	2.8	6.8	3780	**C362_6.8 S3 M3LB4**	138	**C362_6.8 P100 BN100LB4**	139
222	123	2.8	6.4	4370	**C412_6.4 S3 M3LB4**	142	**C412_6.4 P100 BN100LB4**	143
225	119	1.3	6.3	3100	**C322_6.3 S3 M3LB4**	134	**C322_6.3 P100 BN100LB4**	135
232	117	1.7	12.3	3190	**C322_12.3 S3 M3LA2**	134	**C322_12.3 P100 BN100L2**	135
232	116	0.9	6.1	1600	**C222_6.1 S3 M3LB4**	130	**C222_6.1 P100 BN100LB4**	131
237	115	2.3	6.0	4090	**C412_6.0 S3 M3LB4**	142	**C412_6.0 P100 BN100LB4**	143
241	111	1.8	5.8	3530	**C362_5.8 S3 M3LB4**	138	**C362_5.8 P100 BN100LB4**	139
249	107	1.4	5.7	3040	**C322_5.7 S3 M3LB4**	134	**C322_5.7 P100 BN100LB4**	135
252	106	1.0	5.6	1750	**C222_5.6 S3 M3LB4**	130	**C222_5.6 P100 BN100LB4**	131
258	105	1.1	11.1	1850	**C222_11.1 S3 M3LA2**	130	**C222_11.1 P100 BN100L2**	131
255	106	1.8	11.2	3090	**C322_11.2 S3 M3LA2**	134	**C322_11.2 P100 BN100L2**	135
267	100	2.0	5.3	3380	**C362_5.3 S3 M3LB4**	138	**C362_5.3 P100 BN100LB4**	139
285	94	1.6	5.0	2950	**C322_5.0 S3 M3LB4**	134	**C322_5.0 P100 BN100LB4**	135
296	91	1.1	4.8	1780	**C222_4.8 S3 M3LB4**	130	**C222_4.8 P100 BN100LB4**	131
298	91	1.3	9.6	1880	**C222_9.6 S3 M3LA2**	130	**C222_9.6 P100 BN100L2**	131
302	90	2.9	4.7	3880	**C412_4.7 S3 M3LB4**	142	**C412_4.7 P100 BN100LB4**	143
305	88	2.3	4.6	3270	**C362_4.6 S3 M3LB4**	138	**C362_4.6 P100 BN100LB4**	139
308	88	2.0	9.3	2990	**C322_9.3 S3 M3LA2**	134	**C322_9.3 P100 BN100L2**	135
313	85	1.8	4.5	2880	**C322_4.5 S3 M3LB4**	134	**C322_4.5 P100 BN100LB4**	135
329	83	1.3	8.7	1840	**C222_8.7 S3 M3LA2**	130	**C222_8.7 P100 BN100L2**	131
331	81	1.2	4.3	1800	**C222_4.3 S3 M3LB4**	130	**C222_4.3 P100 BN100LB4**	131
336	80	2.5	4.2	3190	**C362_4.2 S3 M3LB4**	138	**C362_4.2 P100 BN100LB4**	139
336	81	2.1	8.5	2900	**C322_8.5 S3 M3LA2**	134	**C322_8.5 P100 BN100L2**	135
377	71	2.1	3.7	2780	**C322_3.7 S3 M3LB4**	134	**C322_3.7 P100 BN100LB4**	135
380	70	1.3	3.7	1740	**C222_3.7 S3 M3LB4**	130	**C222_3.7 P100 BN100LB4**	131
399	68	2.3	7.2	2810	**C322_7.2 S3 M3LA2**	134	**C322_7.2 P100 BN100L2**	135
404	66	3.0	3.5	3130	**C362_3.5 S3 M3LB4**	138	**C362_3.5 P100 BN100LB4**	139
404	67	1.6	7.1	1800	**C222_7.1 S3 M3LA2**	130	**C222_7.1 P100 BN100L2**	131
414	65	2.1	3.4	2690	**C322_3.4 S3 M3LB4**	134	**C322_3.4 P100 BN100LB4**	135
424	63	1.3	3.3	1740	**C222_3.3 S3 M3LB4**	130	**C222_3.3 P100 BN100LB4**	131
457	60	2.5	6.3	2650	**C322_6.3 S3 M3LA2**	134	**C322_6.3 P100 BN100L2**	135
470	58	1.5	6.1	1690	**C222_6.1 S3 M3LA2**	130	**C222_6.1 P100 BN100L2**	131
490	55	2.4	2.9	2610	**C322_2.9 S3 M3LB4**	134	**C322_2.9 P100 BN100LB4**	135
502	54	2.6	5.7	2570	**C322_5.7 S3 M3LA2**	134	**C322_5.7 P100 BN100L2**	135

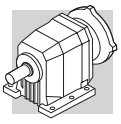

3 kW

n_2 min^{-1}	M_2 Nm	S	i	R_{n2} N			IEC	
511	53	1.5	5.6	1650	**C222_5.6 S3 M3LA2**	130	**C222_5.6 P100 BN100L2**	131
518	52	1.5	2.7	1660	**C222_2.7 S3 M3LB4**	130	**C222_2.7 P100 BN100LB4**	131
578	47	2.9	5.0	2500	**C322_5.0 S3 M3LA2**	134	**C322_5.0 P100 BN100L2**	135
636	54	2.4	4.5	2400	**C322_4.5 S3 M3LA2**	134	**C322_4.5 P100 BN100L2**	135
600	45	1.8	4.8	1620	**C222_4.8 S3 M3LA2**	130	**C222_4.8 P100 BN100L2**	131
665	41	1.8	4.3	1580	**C222_4.3 S3 M3LA2**	130	**C222_4.3 P100 BN100L2**	131
766	36	3.4	3.7	2320	**C322_3.7 S3 M3LA2**	134	**C322_3.7 P100 BN100L2**	135
771	35	2.0	3.7	1540	**C222_3.7 S3 M3LA2**	130	**C222_3.7 P100 BN100L2**	131
783	35	1.0	3.7	560	**C122_3.7 S3 M3LA2**	126	**C122_3.7 P100 BN100L2**	127
867	83	2.2	3.3	1480	**C222_3.3 S3 M3LA2**	130	**C222_3.3 P100 BN100L2**	131
894	30	1.1	3.2	630	**C122_3.2 S3 M3LA2**	126	**C122_3.2 P100 BN100L2**	127
1033	26	1.1	2.8	750	**C122_2.8 S3 M3LA2**	126	**C122_2.8 P100 BN100L2**	127
1051	26	2.5	2.7	1430	**C222_2.7 S3 M3LA2**	130	**C222_2.7 P100 BN100L2**	131

4 kW

n_2 min^{-1}	M_2 Nm	S	i	R_{n2} N			IEC	
2.8	12569	1.0	502.6	85000	**C1004_502.6 S3 M3LC4**	163	**C1004_502.6 P112 BN112M4**	164
3.4	10249	1.2	409.8	85000	**C1004_409.8 S3 M3LC4**	163	**C1004_409.8 P112 BN112M4**	164
4.3	8093	1.5	323.6	85000	**C1004_323.6 S3 M3LC4**	163	**C1004_323.6 P112 BN112M4**	164
4.7	7325	1.0	292.9	60000	**C904_292.9 S3 M3LC4**	160	**C904_292.9 P112 BN112M4**	161
5.2	6715	1.1	268.5	60000	**C904_268.5 S3 M3LC4**	160	**C904_268.5 P112 BN112M4**	161
5.7	6107	2.0	244.2	85000	**C1004_244.2 S3 M3LC4**	163	**C1004_244.2 P112 BN112M4**	164
6.0	5795	1.2	231.7	60000	**C904_231.7 S3 M3LC4**	160	**C904_231.7 P112 BN112M4**	161
7.5	4637	2.6	185.4	85000	**C1004_185.4 S3 M3LC4**	163	**C1004_185.4 P112 BN112M4**	164
8.1	4399	1.6	172.1	60000	**C903_172.1 S3 M3LC4**	160	**C903_172.1 P112 BN112M4**	161
8.2	4319	0.9	169.0	35000	**C803_169.0 S3 M3LC4**	157	**C803_169.0 P112 BN112M4**	158
10.2	3493	1.1	136.7	35000	**C803_136.7 S3 M3LC4**	157	**C803_136.7 P112 BN112M4**	158
10.4	3428	2.1	134.1	60000	**C903_134.1 S3 M3LC4**	160	**C903_134.1 P112 BN112M4**	161
11.9	2983	2.4	116.7	60000	**C903_116.7 S3 M3LC4**	160	**C903_116.7 P112 BN112M4**	161
12.7	2799	1.4	109.5	35000	**C803_109.5 S3 M3LC4**	157	**C803_109.5 P112 BN112M4**	158
14.3	2489	1.6	97.4	35000	**C803_97.4 S3 M3LC4**	157	**C803_97.4 P112 BN112M4**	158
14.4	2460	2.9	96.2	60000	**C903_96.2 S3 M3LC4**	160	**C903_96.2 P112 BN112M4**	161
15.6	2282	1.8	89.3	35000	**C803_89.3 S3 M3LC4**	157	**C803_89.3 P112 BN112M4**	158
15.8	2254	1.0	88.2	25000	**C703_88.2 S3 M3LC4**	154	**C703_88.2 P112 BN112M4**	155
17.1	2081	1.1	81.4	25000	**C703_81.4 S3 M3LC4**	154	**C703_81.4 P112 BN112M4**	155
19.5	1823	1.3	71.3	25000	**C703_71.3 S3 M3LC4**	154	**C703_71.3 P112 BN112M4**	155
19.7	1802	2.2	70.5	35000	**C803_70.5 S3 M3LC4**	157	**C803_70.5 P112 BN112M4**	158
20.5	1730	0.9	67.7	16000	**C613_67.7 S3 M3LC4**	150	**C613_67.7 P112 BN112M4**	151
23.7	1498	1.1	58.6	16000	**C613_58.6 S3 M3LC4**	150	**C613_58.6 P112 BN112M4**	151
24.3	1464	2.7	57.3	35000	**C803_57.3 S3 M3LC4**	157	**C803_57.3 P112 BN112M4**	158
24.6	1444	1.6	56.5	25000	**C703_56.5 S3 M3LC4**	154	**C703_56.5 P112 BN112M4**	155
26.0	1366	1.2	53.5	16000	**C613_53.5 S3 M3LC4**	150	**C613_53.5 P112 BN112M4**	151
26.6	1333	1.7	52.2	25000	**C703_52.2 S3 M3LC4**	154	**C703_52.2 P112 BN112M4**	155
29.2	1217	1.3	47.6	16000	**C613_47.6 S3 M3LC4**	150	**C613_47.6 P112 BN112M4**	151
29.3	1213	3.1	47.4	35000	**C803_47.4 S3 M3LC4**	157	**C803_47.4 P112 BN112M4**	158
31	1142	2.0	44.7	25000	**C703_44.7 S3 M3LC4**	154	**C703_44.7 P112 BN112M4**	155
32	1112	3.4	43.5	35000	**C803_43.5 S3 M3LC4**	157	**C803_43.5 P112 BN112M4**	158

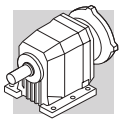

4 kW

n_2 min^{-1}	M_2 Nm	S	i	R_{n2} N			IEC	
32	1110	1.4	43.4	16000	**C613_43.4 S3 M3LC4**	150	**C613_43.4 P112 BN112M4**	151
34	1055	2.2	41.3	25000	**C703_41.3 S3 M3LC4**	154	**C703_41.3 P112 BN112M4**	155
34	1035	1.0	40.5	10000	**C513_40.5 S3 M3LC4**	146	**C513_40.5 P112 BN112M4**	147
37	992	1.4	38.0	16000	**C612_38.0 S3 M3LC4**	150	**C612_38.0 P112 BN112M4**	151
38	945	1.1	37.0	10000	**C513_37.0 S3 M3LC4**	146	**C513_37.0 P112 BN112M4**	147
40	907	2.3	34.7	23400	**C702_34.7 S3 M3LC4**	154	**C702_34.7 P112 BN112M4**	155
41	893	1.4	34.2	15700	**C612_34.2 S3 M3LC4**	150	**C612_34.2 P112 BN112M4**	151
42	862	0.9	33.0	10000	**C512_33.0 S3 M3LC4**	146	**C512_33.0 P112 BN112M4**	147
46	795	1.7	30.4	15300	**C612_30.4 S3 M3LC4**	150	**C612_30.4 P112 BN112M4**	151
47	777	1.0	29.8	10000	**C512_29.8 S3 M3LC4**	146	**C512_29.8 P112 BN112M4**	147
50	724	2.9	27.7	22300	**C702_27.7 S3 M3LC4**	154	**C702_27.7 P112 BN112M4**	155
51	716	1.9	27.4	14900	**C612_27.4 S3 M3LC4**	150	**C612_27.4 P112 BN112M4**	151
54	676	1.2	25.9	10000	**C512_25.9 S3 M3LC4**	146	**C512_25.9 P112 BN112M4**	147
56	648	2.1	24.8	14600	**C612_24.8 S3 M3LC4**	150	**C612_24.8 P112 BN112M4**	151
60	610	1.3	23.4	10000	**C512_23.4 S3 M3LC4**	146	**C512_23.4 P112 BN112M4**	147
62	584	2.3	22.4	14200	**C612_22.4 S3 M3LC4**	150	**C612_22.4 P112 BN112M4**	151
66	547	1.5	21.0	9920	**C512_21.0 S3 M3LC4**	146	**C512_21.0 P112 BN112M4**	147
70	516	0.9	19.8	4760	**C412_19.8 S3 M3LC4**	142	**C412_19.8 P112 BN112M4**	143
71	512	2.6	19.6	13800	**C612_19.6 S3 M3LC4**	150	**C612_19.6 P112 BN112M4**	151
74	493	1.6	18.9	9730	**C512_18.9 S3 M3LC4**	146	**C512_18.9 P112 BN112M4**	147
78	465	1.0	17.8	4720	**C412_17.8 S3 M3LC4**	142	**C412_17.8 P112 BN112M4**	143
79	461	2.9	17.7	13400	**C612_17.7 S3 M3LC4**	150	**C612_17.7 P112 BN112M4**	151
84	433	1.8	16.6	9440	**C512_16.6 S3 M3LC4**	146	**C512_16.6 P112 BN112M4**	147
87	416	3.2	15.9	13100	**C612_15.9 S3 M3LC4**	150	**C612_15.9 P112 BN112M4**	151
88	413	1.1	15.8	4740	**C412_15.8 S3 M3LC4**	142	**C412_15.8 P112 BN112M4**	143
93	391	2.0	15.0	9230	**C512_15.0 S3 M3LC4**	146	**C512_15.0 P112 BN112M4**	147
95	378	1.0	14.8	3880	**C362_14.8 S3 M3LC4**	138	**C362_14.8 P112 BN112M4**	139
98	372	1.2	14.2	4690	**C412_14.2 S3 M3LC4**	142	**C412_14.2 P112 BN112M4**	143
105	342	1.1	13.3	3840	**C362_13.3 S3 M3LC4**	138	**C362_13.3 P112 BN112M4**	139
106	343	2.2	13.1	8930	**C512_13.1 S3 M3LC4**	146	**C512_13.1 P112 BN112M4**	147
112	324	1.3	12.4	4660	**C412_12.4 S3 M3LC4**	142	**C412_12.4 P112 BN112M4**	143
117	309	2.5	11.8	8720	**C512_11.8 S3 M3LC4**	146	**C512_11.8 P112 BN112M4**	147
120	299	1.3	11.7	3840	**C362_11.7 S3 M3LC4**	138	**C362_11.7 P112 BN112M4**	139
125	291	1.4	11.2	4580	**C412_11.2 S3 M3LC4**	142	**C412_11.2 P112 BN112M4**	143
132	272	1.4	10.6	3780	**C362_10.6 S3 M3LC4**	138	**C362_10.6 P112 BN112M4**	139
143	255	2.7	9.8	8290	**C512_9.8 S3 M3LC4**	146	**C512_9.8 P112 BN112M4**	147
145	251	1.6	9.6	4510	**C412_9.6 S3 M3LC4**	142	**C412_9.6 P112 BN112M4**	143
151	238	0.9	9.3	3150	**C322_9.3 S3 M3LC4**	134	**C322_9.3 P112 BN112M4**	135
158	229	3.0	8.8	8070	**C512_8.8 S3 M3LC4**	146	**C512_8.8 P112 BN112M4**	147
159	226	1.7	8.8	3720	**C362_8.8 S3 M3LC4**	138	**C362_8.8 P112 BN112M4**	139
161	226	1.7	8.6	4420	**C412_8.6 S3 M3LC4**	142	**C412_8.6 P112 BN112M4**	143
165	218	1.0	8.5	3110	**C322_8.5 S3 M3LC4**	134	**C322_8.5 P112 BN112M4**	135
174	206	1.8	8.0	3650	**C362_8.0 S3 M3LC4**	138	**C362_8.0 P112 BN112M4**	139
179	202	3.2	7.8	7800	**C512_7.8 S3 M3LC4**	146	**C512_7.8 P112 BN112M4**	147
184	197	1.1	15.6	3090	**C322_15.6 S3 M3LB2**	134	**C322_15.6 P112 BN112M2**	135
195	184	1.1	7.2	3070	**C322_7.2 S3 M3LC4**	134	**C322_7.2 P112 BN112M4**	135
197	184	1.9	7.1	4280	**C412_7.1 S3 M3LC4**	142	**C412_7.1 P112 BN112M4**	143
199	182	3.5	7.0	7580	**C512_7.0 S3 M3LC4**	146	**C512_7.0 P112 BN112M4**	147
204	178	1.2	14.1	3040	**C322_14.1 S3 M3LB2**	134	**C322_14.1 P112 BN112M2**	135
206	174	2.0	6.8	3580	**C362_6.8 S3 M3LC4**	138	**C362_6.8 P112 BN112M4**	139
218	166	2.1	6.4	4180	**C412_6.4 S3 M3LC4**	142	**C412_6.4 P112 BN112M4**	143

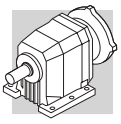

4 kW

n_2 min^{-1}	M_2 Nm	S	i	R_{n2} N			IEC	
223	161	1.0	6.3	2840	**C322_6.3 S3 M3LC4**	134	**C322_6.3 P112 BN112M4**	135
233	156	1.3	12.3	2990	**C322_12.3 S3 M3LB2**	134	**C322_12.3 P112 BN112M2**	135
234	155	1.7	6.0	3840	**C412_6.0 S3 M3LC4**	142	**C412_6.0 P112 BN112M4**	143
239	150	1.3	5.8	3310	**C362_5.8 S3 M3LC4**	138	**C362_5.8 P112 BN112M4**	139
248	145	1.1	5.7	2780	**C322_5.7 S3 M3LC4**	134	**C322_5.7 P112 BN112M4**	135
256	142	1.3	11.2	2900	**C322_11.2 S3 M3LB2**	134	**C322_11.2 P112 BN112M2**	135
265	135	1.5	5.3	3200	**C362_5.3 S3 M3LC4**	138	**C362_5.3 P112 BN112M4**	139
283	127	1.2	5.0	2760	**C322_5.0 S3 M3LC4**	134	**C322_5.0 P112 BN112M4**	135
298	122	0.9	9.6	1680	**C222_9.6 S3 M3LB2**	130	**C222_9.6 P112 BN112M2**	131
303	119	1.7	4.6	3180	**C362_4.6 S3 M3LC4**	138	**C362_4.6 P112 BN112M4**	139
309	118	1.5	9.3	2840	**C322_9.3 S3 M3LB2**	134	**C322_9.3 P112 BN112M2**	135
311	115	1.3	4.5	2690	**C322_4.5 S3 M3LC4**	134	**C322_4.5 P112 BN112M4**	135
330	110	1.0	8.7	1660	**C222_8.7 S3 M3LB2**	130	**C222_8.7 P112 BN112M2**	131
333	108	1.9	4.2	3060	**C362_4.2 S3 M3LC4**	138	**C362_4.2 P112 BN112M4**	139
336	109	0.9	4.3	1300	**C222_4.3 S3 M3LC4**	130	**C222_4.3 P112 BN112M4**	131
338	107	1.6	8.5	2750	**C322_8.5 S3 M3LB2**	134	**C322_8.5 P112 BN112M2**	135
375	96	1.6	3.7	2640	**C322_3.7 S3 M3LC4**	134	**C322_3.7 P112 BN112M4**	135
378	95	0.9	3.7	1560	**C222_3.7 S3 M3LC4**	130	**C222_3.7 P112 BN112M4**	131
401	91	1.8	7.2	2690	**C322_7.2 S3 M3LB2**	134	**C322_7.2 P112 BN112M2**	135
402	89	2.2	3.5	3010	**C362_3.5 S3 M3LC4**	138	**C362_3.5 P112 BN112M4**	139
405	90	1.2	7.1	1650	**C222_7.1 S3 M3LB2**	130	**C222_7.1 P112 BN112M2**	131
411	87	1.6	3.4	2580	**C322_3.4 S3 M3LC4**	134	**C322_3.4 P112 BN112M4**	135
421	85	1.0	3.3	1540	**C222_3.3 S3 M3LC4**	130	**C222_3.3 P112 BN112M4**	131
440	82	2.5	3.2	2890	**C362_3.2 S3 M3LC4**	138	**C362_3.2 P112 BN112M4**	139
458	79	1.9	6.3	2530	**C322_6.3 S3 M3LB2**	134	**C322_6.3 P112 BN112M2**	135
471	77	1.1	6.1	1540	**C222_6.1 S3 M3LB2**	130	**C222_6.1 P112 BN112M2**	131
486	74	1.8	2.9	2500	**C322_2.9 S3 M3LC4**	134	**C322_2.9 P112 BN112M4**	135
513	54	1.5	5.6	1520	**C222_5.6 S3 M3LB2**	130	**C222_5.6 P112 BN112M2**	131
514	70	1.1	2.7	1530	**C222_2.7 S3 M3LC4**	130	**C222_2.7 P112 BN112M4**	131
521	69	2.9	2.7	2840	**C362_2.7 S3 M3LC4**	138	**C362_2.7 P112 BN112M4**	139
580	63	2.2	5.0	2410	**C322_5.0 S3 M3LB2**	134	**C322_5.0 P112 BN112M2**	135
602	60	1.3	4.8	1500	**C222_4.8 S3 M3LB2**	130	**C222_4.8 P112 BN112M2**	131
638	56	2.3	4.5	2330	**C322_4.5 S3 M3LB2**	134	**C322_4.5 P112 BN112M2**	135
667	54	1.4	4.3	1470	**C222_4.3 S3 M3LB2**	130	**C222_4.3 P112 BN112M2**	131
768	47	2.5	3.7	2250	**C322_3.7 S3 M3LB2**	134	**C322_3.7 P112 BN112M2**	135
774	47	1.5	3.7	1450	**C222_3.7 S3 M3LB2**	130	**C222_3.7 P112 BN112M2**	131
844	43	2.7	3.4	2170	**C322_3.4 S3 M3LB2**	134	**C322_3.4 P112 BN112M2**	135
870	42	1.6	3.3	1410	**C222_3.3 S3 M3LB2**	130	**C222_3.3 P112 BN112M2**	131
997	36	2.9	2.9	2100	**C322_2.9 S3 M3LB2**	134	**C322_2.9 P112 BN112M2**	135
1054	34	1.9	2.7	1370	**C222_2.7 S3 M3LB2**	130	**C222_2.7 P112 BN112M2**	131

5.5 kW

n_2 min^{-1}	M_2 Nm	S	i	R_{n2} N			IEC	
3.8	12630	1.0	380.5	85000	**C1004_380.5 S4 M4SA4**	163	**C1004_380.5 P132 BN132S4**	164
4.4	10741	1.1	323.6	85000	**C1004_323.6 S4 M4SA4**	163	**C1004_323.6 P132 BN132S4**	164
4.8	9974	1.2	300.5	85000	**C1004_300.5 S4 M4SA4**	163	**C1004_300.5 P132 BN132S4**	164
5.5	8730	1.4	263.0	85000	**C1004_263.0 S4 M4SA4**	163	**C1004_263.0 P132 BN132S4**	164

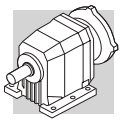

5.5 kW

n_2 min^{-1}	M_2 Nm	S	i	R_{n2} N			IEC	
5.9	8106	1.5	244.2	85000	**C1004_244.2 S4 M4SA4**	163	**C1004_244.2 P132 BN132S4**	164
6.2	7691	0.9	231.7	60000	**C904_231.7 S4 M4SA4**	160	**C904_231.7 P132 BN132S4**	161
6.8	7050	1.0	212.4	60000	**C904_212.4 S4 M4SA4**	160	**C904_212.4 P132 BN132S4**	161
7.2	6625	1.8	199.6	85000	**C1004_199.6 S4 M4SA4**	163	**C1004_199.6 P132 BN132S4**	164
8.4	5838	1.2	172.1	60000	**C903_172.1 S4 M4SA4**	160	**C903_172.1 P132 BN132S4**	161
9.6	5103	2.4	150.4	85000	**C1003_150.4 S4 M4SA4**	163	**C1003_150.4 P132 BN132S4**	164
9.8	4964	1.5	146.3	60000	**C903_146.3 S4 M4SA4**	160	**C903_146.3 P132 BN132S4**	161
12.1	4052	1.0	119.5	35000	**C803_119.5 S4 M4SA4**	157	**C803_119.5 P132 BN132S4**	158
12.3	3960	1.8	116.7	60000	**C903_116.7 S4 M4SA4**	160	**C903_116.7 P132 BN132S4**	161
14.8	3304	1.2	97.4	35000	**C803_97.4 S4 M4SA4**	157	**C803_97.4 P132 BN132S4**	158
15.0	3265	2.2	96.2	60000	**C903_96.2 S4 M4SA4**	160	**C903_96.2 P132 BN132S4**	161
17.7	2755	2.6	81.2	59100	**C903_81.2 S4 M4SA4**	160	**C903_81.2 P132 BN132S4**	161
18.7	2609	1.5	76.9	35000	**C803_76.9 S4 M4SA4**	157	**C803_76.9 P132 BN132S4**	158
20.2	2420	1.0	71.3	25000	**C703_71.3 S4 M4SA4**	154	**C703_71.3 P132 BN132S4**	155
20.4	2392	1.7	70.5	35000	**C803_70.5 S4 M4SA4**	157	**C803_70.5 P132 BN132S4**	158
21.9	2234	1.0	65.9	25000	**C703_65.9 S4 M4SA4**	154	**C703_65.9 P132 BN132S4**	155
25.1	1944	2.1	57.3	35000	**C803_57.3 S4 M4SA4**	157	**C803_57.3 P132 BN132S4**	158
25.5	1917	1.2	56.5	25000	**C703_56.5 S4 M4SA4**	154	**C703_56.5 P132 BN132S4**	155
27.6	1770	1.3	52.2	24700	**C703_52.2 S4 M4SA4**	154	**C703_52.2 P132 BN132S4**	155
30	1616	1.0	47.6	15300	**C613_47.6 S4 M4SA4**	150	**C613_47.6 P132 BN132S4**	151
30	1609	2.4	47.4	35000	**C803_47.4 S4 M4SA4**	157	**C803_47.4 P132 BN132S4**	158
32	1516	1.5	44.7	24100	**C703_44.7 S4 M4SA4**	154	**C703_44.7 P132 BN132S4**	155
33	1475	2.6	43.5	35000	**C803_43.5 S4 M4SA4**	157	**C803_43.5 P132 BN132S4**	158
33	1474	1.1	43.4	15000	**C613_43.4 S4 M4SA4**	150	**C613_43.4 P132 BN132S4**	151
35	1400	1.6	41.3	23800	**C703_41.3 S4 M4SA4**	154	**C703_41.3 P132 BN132S4**	155
37	1355	2.4	39.1	35000	**C802_39.1 S4 M4SA4**	157	**C802_39.1 P132 BN132S4**	158
38	1317	1.0	38.0	14800	**C612_38.0 S4 M4SA4**	150	**C612_38.0 P132 BN132S4**	151
41	1204	1.7	34.7	22100	**C702_34.7 S4 M4SA4**	154	**C702_34.7 P132 BN132S4**	155
42	1186	1.0	34.2	14500	**C612_34.2 S4 M4SA4**	150	**C612_34.2 P132 BN132S4**	151
46	1086	3.4	31.3	33400	**C802_31.3 S4 M4SA4**	157	**C802_31.3 P132 BN132S4**	158
47	1055	1.3	30.4	14300	**C612_30.4 S4 M4SA4**	150	**C612_30.4 P132 BN132S4**	151
48	1020	1.0	30.1	9610	**C513_30.1 S4 M4SA4**	146	**C513_30.1 P132 BN132S4**	147
52	961	2.2	27.7	21200	**C702_27.7 S4 M4SA4**	154	**C702_27.7 P132 BN132S4**	155
52	931	1.0	27.4	9490	**C513_27.4 S4 M4SA4**	146	**C513_27.4 P132 BN132S4**	147
53	950	1.4	27.4	13900	**C612_27.4 S4 M4SA4**	150	**C612_27.4 P132 BN132S4**	151
58	860	1.6	24.8	13700	**C612_24.8 S4 M4SA4**	150	**C612_24.8 P132 BN132S4**	151
62	809	1.0	23.4	9310	**C512_23.4 S4 M4SA4**	146	**C512_23.4 P132 BN132S4**	147
63	792	2.7	22.9	20400	**C702_22.9 S4 M4SA4**	154	**C702_22.9 P132 BN132S4**	155
64	775	1.7	22.4	13400	**C612_22.4 S4 M4SA4**	150	**C612_22.4 P132 BN132S4**	151
69	726	1.1	21.0	9150	**C512_21.0 S4 M4SA4**	146	**C512_21.0 P132 BN132S4**	147
73	679	2.0	19.6	13100	**C612_19.6 S4 M4SA4**	150	**C612_19.6 P132 BN132S4**	151
75	668	3.1	19.3	19700	**C702_19.3 S4 M4SA4**	154	**C702_19.3 P132 BN132S4**	155
76	655	1.2	18.9	9030	**C512_18.9 S4 M4SA4**	146	**C512_18.9 P132 BN132S4**	147
82	612	2.2	17.7	12700	**C612_17.7 S4 M4SA4**	150	**C612_17.7 P132 BN132S4**	151
87	575	1.4	16.6	8810	**C512_16.6 S4 M4SA4**	146	**C512_16.6 P132 BN132S4**	147
90	552	2.4	15.9	12500	**C612_15.9 S4 M4SA4**	150	**C612_15.9 P132 BN132S4**	151
96	519	1.5	15.0	8660	**C512_15.0 S4 M4SA4**	146	**C512_15.0 P132 BN132S4**	147
100	497	2.7	14.3	12100	**C612_14.3 S4 M4SA4**	150	**C612_14.3 P132 BN132S4**	151
101	494	0.9	14.2	4000	**C412_14.2 S4 M4SA4**	142	**C412_14.2 P132 BN132S4**	143
110	455	1.6	13.1	8420	**C512_13.1 S4 M4SA4**	146	**C512_13.1 P132 BN132S4**	147
116	429	1.0	12.4	4060	**C412_12.4 S4 M4SA4**	142	**C412_12.4 P132 BN132S4**	143

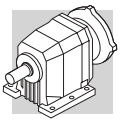

5.5 kW

n_2 min^{-1}	M_2 Nm	S	i	R_{n2} N			IEC	
119	419	3.2	12.1	11600	**C612_12.1 S4 M4SA4**	150	**C612_12.1 P132 BN132S4**	151
122	410	1.9	11.8	8250	**C512_11.8 S4 M4SA4**	146	**C512_11.8 P132 BN132S4**	147
123	399	1.0	11.7	3380	**C362_11.7 S4 M4SA4**	138	**C362_11.7 P132 BN132S4**	139
129	387	1.1	11.2	4030	**C412_11.2 S4 M4SA4**	142	**C412_11.2 P132 BN132S4**	143
136	363	1.0	10.6	3350	**C362_10.6 S4 M4SA4**	138	**C362_10.6 P132 BN132S4**	139
148	338	2.0	9.8	7890	**C512_9.8 S4 M4SA4**	146	**C512_9.8 P132 BN132S4**	147
150	333	1.2	9.6	4030	**C412_9.6 S4 M4SA4**	142	**C412_9.6 P132 BN132S4**	143
164	305	2.2	8.8	7700	**C512_8.8 S4 M4SA4**	146	**C512_8.8 P132 BN132S4**	147
164	301	1.3	8.8	3350	**C362_8.8 S4 M4SA4**	138	**C362_8.8 P132 BN132S4**	139
167	299	1.3	8.6	3980	**C412_8.6 S4 M4SA4**	142	**C412_8.6 P132 BN132S4**	143
179	275	1.3	8.0	3330	**C362_8.0 S4 M4SA4**	138	**C362_8.0 P132 BN132S4**	139
186	269	2.4	7.8	7460	**C512_7.8 S4 M4SA4**	146	**C512_7.8 P132 BN132S4**	147
204	245	1.4	7.1	3920	**C412_7.1 S4 M4SA4**	142	**C412_7.1 P132 BN132S4**	143
206	242	2.6	7.0	7280	**C512_7.0 S4 M4SA4**	146	**C512_7.0 P132 BN132S4**	147
212	232	1.5	6.8	3280	**C362_6.8 S4 M4SA4**	138	**C362_6.8 P132 BN132S4**	139
226	221	1.6	6.4	3840	**C412_6.4 S4 M4SA4**	142	**C412_6.4 P132 BN132S4**	143
240	208	3.2	6.0	9480	**C612_6.0 S4 M4SA4**	150	**C612_6.0 P132 BN132S4**	151
242	206	1.3	6.0	3430	**C412_6.0 S4 M4SA4**	142	**C412_6.0 P132 BN132S4**	143
246	200	1.0	5.8	3020	**C362_5.8 S4 M4SA4**	138	**C362_5.8 P132 BN132S4**	139
256	195	2.2	5.6	6720	**C512_5.6 S4 M4SA4**	146	**C512_5.6 P132 BN132S4**	147
259	193	1.7	11.2	3770	**C412_11.2 S4 M4SA2**	142	**C412_11.2 P132 BN132SA2**	143
262	191	1.3	3.6	3410	**C412_3.6 S4 M4LB6**	142	**C412_3.6 P132 BN132MB6**	143
273	181	1.1	5.3	2930	**C362_5.3 S4 M4SA4**	138	**C362_5.3 P132 BN132S4**	139
286	175	2.4	3.3	6530	**C512_3.3 S4 M4LB6**	146	**C512_3.3 P132 BN132MB6**	147
291	169	0.9	5.0	2480	**C322_5.0 S4 M4SA4**	134	**C322_5.0 P132 BN132S4**	135
301	166	1.9	9.6	3680	**C412_9.6 S4 M4SA2**	142	**C412_9.6 P132 BN132SA2**	143
309	162	1.6	4.7	3360	**C412_4.7 S4 M4SA4**	142	**C412_4.7 P132 BN132S4**	143
312	158	1.3	4.6	2860	**C362_4.6 S4 M4SA4**	138	**C362_4.6 P132 BN132S4**	139
320	154	1.0	4.5	2500	**C322_4.5 S4 M4SA4**	134	**C322_4.5 P132 BN132S4**	135
323	154	2.8	4.5	6330	**C512_4.5 S4 M4SA4**	146	**C512_4.5 P132 BN132S4**	147
334	149	2.0	8.6	3600	**C412_8.6 S4 M4SA2**	142	**C412_8.6 P132 BN132SA2**	143
343	144	1.4	4.2	2830	**C362_4.2 S4 M4SA4**	138	**C362_4.2 P132 BN132S4**	139
355	140	1.7	2.7	3300	**C412_2.7 S4 M4LB6**	142	**C412_2.7 P132 BN132MB6**	143
359	139	2.9	2.6	6150	**C512_2.6 S4 M4LB6**	146	**C512_2.6 P132 BN132MB6**	147
361	138	2.1	8.0	2850	**C362_8.0 S4 M4SA2**	138	**C362_8.0 P132 BN132SA2**	139
386	128	1.2	3.7	2410	**C322_3.7 S4 M4SA4**	134	**C322_3.7 P132 BN132S4**	135
399	125	2.0	3.6	3240	**C412_3.6 S4 M4SA4**	142	**C412_3.6 P132 BN132S4**	143
409	122	2.3	7.1	3460	**C412_7.1 S4 M4SA2**	142	**C412_7.1 P132 BN132SA2**	143
413	119	1.7	3.5	2750	**C362_3.5 S4 M4SA4**	138	**C362_3.5 P132 BN132S4**	139
422	117	1.2	3.4	2370	**C322_3.4 S4 M4SA4**	134	**C322_3.4 P132 BN132S4**	135
425	118	2.4	6.8	2750	**C362_6.8 S4 M4SA2**	138	**C362_6.8 P132 BN132SA2**	139
453	109	1.8	3.2	2700	**C362_3.2 S4 M4SA4**	138	**C362_3.2 P132 BN132S4**	139
454	110	2.5	6.4	3370	**C412_6.4 S4 M4SA2**	142	**C412_6.4 P132 BN132SA2**	143
485	103	2.5	6.0	3140	**C412_6.0 S4 M4SA2**	142	**C412_6.0 P132 BN132SA2**	143
498	100	2.0	5.8	2620	**C362_5.8 S4 M4SA2**	138	**C362_5.8 P132 BN132SA2**	139
500	98	1.3	2.9	2310	**C322_2.9 S4 M4SA4**	134	**C322_2.9 P132 BN132S4**	135
536	92	2.2	2.7	2620	**C362_2.7 S4 M4SA4**	138	**C362_2.7 P132 BN132S4**	139
542	92	2.7	2.7	3070	**C412_2.7 S4 M4SA4**	142	**C412_2.7 P132 BN132S4**	143
545	92	2.2	5.3	2550	**C362_5.3 S4 M4SA2**	138	**C362_5.3 P132 BN132SA2**	139
578	86	1.6	5.0	2230	**C322_5.0 S4 M4SA2**	134	**C322_5.0 P132 BN132SA2**	135
620	81	3.2	4.7	2990	**C412_4.7 S4 M4SA2**	142	**C412_4.7 P132 BN132SA2**	143

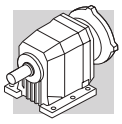

5.5 kW

n_2 min^{-1}	M_2 Nm	S	i	R_{n2} N			IEC	
642	78	1.7	4.5	2190	**C322_4.5 S4 M4SA2**	134	**C322_4.5 P132 BN132SA2**	135
781	64	1.9	3.7	2120	**C322_3.7 S4 M4SA2**	134	**C322_3.7 P132 BN132SA2**	135
850	59	2.0	3.4	2080	**C322_3.4 S4 M4SA2**	134	**C322_3.4 P132 BN132SA2**	135
1004	50	2.1	2.9	2000	**C322_2.9 S4 M4SA2**	134	**C322_2.9 P132 BN132SA2**	135

7.5 kW

n_2 min^{-1}	M_2 Nm	S	i	R_{n2} N			IEC	
5.5	11904	1.0	263.0	85000	**C1004_263.0 S4 M4LA4**	163	**C1004_263.0 P132 BN132MA4**	164
7.2	9034	1.3	199.6	85000	**C1004_199.6 S4 M4LA4**	163	**C1004_199.6 P132 BN132MA4**	164
8.4	7961	0.9	172.1	60000	**C903_172.1 S4 M4LA4**	160	**C903_172.1 P132 BN132MA4**	161
9.6	6958	1.7	150.4	85000	**C1003_150.4 S4 M4LA4**	163	**C1003_150.4 P132 BN132MA4**	164
9.8	6769	1.1	146.3	59600	**C903_146.3 S4 M4LA4**	160	**C903_146.3 P132 BN132MA4**	161
12.3	5400	1.3	116.7	58600	**C903_116.7 S4 M4LA4**	160	**C903_116.7 P132 BN132MA4**	161
12.9	5176	2.3	111.9	85000	**C1003_111.9 S4 M4LA4**	163	**C1003_111.9 P132 BN132MA4**	164
16.1	4129	1.0	89.3	35000	**C803_89.3 S4 M4LA4**	157	**C803_89.3 P132 BN132MA4**	158
16.3	4081	1.7	88.2	56600	**C903_88.2 S4 M4LA4**	160	**C903_88.2 P132 BN132MA4**	161
16.8	3958	3.0	85.6	85000	**C1003_85.6 S4 M4LA4**	163	**C1003_85.6 P132 BN132MA4**	164
19.3	3444	2.1	74.4	55200	**C903_74.4 S4 M4LA4**	160	**C903_74.4 P132 BN132MA4**	161
20.4	3261	1.2	70.5	35000	**C803_70.5 S4 M4LA4**	157	**C803_70.5 P132 BN132MA4**	158
23.0	2891	1.4	62.5	35000	**C803_62.5 S4 M4LA4**	157	**C803_62.5 P132 BN132MA4**	158
24.3	2738	2.6	59.2	53000	**C903_59.2 S4 M4LA4**	160	**C903_59.2 P132 BN132MA4**	161
27.6	2413	1.0	52.2	22900	**C703_52.2 S4 M4LA4**	154	**C703_52.2 P132 BN132MA4**	155
30	2195	1.7	47.4	35000	**C803_47.4 S4 M4LA4**	157	**C803_47.4 P132 BN132MA4**	158
32	2068	1.1	44.7	22500	**C703_44.7 S4 M4LA4**	154	**C703_44.7 P132 BN132MA4**	155
35	1909	1.2	41.3	22300	**C703_41.3 S4 M4LA4**	154	**C703_41.3 P132 BN132MA4**	155
37	1848	1.7	39.1	33600	**C802_39.1 S4 M4LA4**	157	**C802_39.1 P132 BN132MA4**	158
40	1672	0.9	36.1	13300	**C613_36.1 S4 M4LA4**	150	**C613_36.1 P132 BN132MA4**	151
41	1642	1.3	34.7	20500	**C702_34.7 S4 M4LA4**	154	**C702_34.7 P132 BN132MA4**	155
44	1525	1.0	33.0	13100	**C613_33.0 S4 M4LA4**	150	**C613_33.0 P132 BN132MA4**	151
46	1481	2.5	31.3	32200	**C802_31.3 S4 M4LA4**	157	**C802_31.3 P132 BN132MA4**	158
47	1439	0.9	30.4	13000	**C612_30.4 S4 M4LA4**	150	**C612_30.4 P132 BN132MA4**	151
49	1358	1.1	29.4	13100	**C613_29.4 S4 M4LA4**	150	**C613_29.4 P132 BN132MA4**	151
52	1310	1.6	27.7	20000	**C702_27.7 S4 M4LA4**	154	**C702_27.7 P132 BN132MA4**	155
53	1296	1.0	27.4	12800	**C612_27.4 S4 M4LA4**	150	**C612_27.4 P132 BN132MA4**	151
55	1226	3.0	25.9	31000	**C802_25.9 S4 M4LA4**	157	**C802_25.9 P132 BN132MA4**	158
58	1173	1.2	24.8	12700	**C612_24.8 S4 M4LA4**	150	**C612_24.8 P132 BN132MA4**	151
60	1132	3.1	24.0	30500	**C802_24.0 S4 M4LA4**	157	**C802_24.0 P132 BN132MA4**	158
63	1080	1.9	22.9	19400	**C702_22.9 S4 M4LA4**	154	**C702_22.9 P132 BN132MA4**	155
64	1056	1.3	22.4	12500	**C612_22.4 S4 M4LA4**	150	**C612_22.4 P132 BN132MA4**	151
65	1051	3.5	22.2	30000	**C802_22.2 S4 M4LA4**	157	**C802_22.2 P132 BN132MA4**	158
73	926	1.5	19.6	12300	**C612_19.6 S4 M4LA4**	150	**C612_19.6 P132 BN132MA4**	151
75	911	2.3	19.3	18900	**C702_19.3 S4 M4LA4**	154	**C702_19.3 P132 BN132MA4**	155
82	834	1.6	17.7	12000	**C612_17.7 S4 M4LA4**	150	**C612_17.7 P132 BN132MA4**	151
86	789	2.6	16.7	18200	**C702_16.7 S4 M4LA4**	154	**C702_16.7 P132 BN132MA4**	155
87	784	1.0	16.6	8070	**C512_16.6 S4 M4LA4**	146	**C512_16.6 P132 BN132MA4**	147
90	753	1.8	15.9	11800	**C612_15.9 S4 M4LA4**	150	**C612_15.9 P132 BN132MA4**	151
96	707	1.1	15.0	8000	**C512_15.0 S4 M4LA4**	146	**C512_15.0 P132 BN132MA4**	147

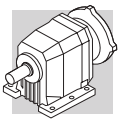

7.5 kW

n_2 min^{-1}	M_2 Nm	S	i	R_{n2} N			IEC	
100	678	2.0	14.3	11500	**C612_14.3 S4 M4LA4**	150	**C612_14.3 P132 BN132MA4**	151
110	620	1.2	13.1	7840	**C512_13.1 S4 M4LA4**	146	**C512_13.1 P132 BN132MA4**	147
111	616	3.4	13.0	17500	**C702_13.0 S4 M4LA4**	154	**C702_13.0 P132 BN132MA4**	155
119	571	2.4	12.1	11100	**C612_12.1 S4 M4LA4**	150	**C612_12.1 P132 BN132MA4**	151
122	559	1.4	11.8	7730	**C512_11.8 S4 M4LA4**	146	**C512_11.8 P132 BN132MA4**	147
132	515	2.6	10.9	10900	**C612_10.9 S4 M4LA4**	150	**C612_10.9 P132 BN132MA4**	151
147	464	2.9	9.8	10600	**C612_9.8 S4 M4LA4**	150	**C612_9.8 P132 BN132MA4**	151
148	461	1.5	9.8	7450	**C512_9.8 S4 M4LA4**	146	**C512_9.8 P132 BN132MA4**	147
163	418	3.2	8.8	10300	**C612_8.8 S4 M4LA4**	150	**C612_8.8 P132 BN132MA4**	151
164	415	1.6	8.8	7320	**C512_8.8 S4 M4LA4**	146	**C512_8.8 P132 BN132MA4**	147
164	418	0.9	8.8	2880	**C362_8.8 S4 M4LA4**	138	**C362_8.8 P132 BN132MA4**	139
167	408	0.9	8.6	3430	**C412_8.6 S4 M4LA4**	142	**C412_8.6 P132 BN132MA4**	143
179	381	1.0	8.0	2900	**C362_8.0 S4 M4LA4**	138	**C362_8.0 P132 BN132MA4**	139
186	366	1.7	7.8	7120	**C512_7.8 S4 M4LA4**	146	**C512_7.8 P132 BN132MA4**	147
204	334	1.1	7.1	3470	**C412_7.1 S4 M4LA4**	142	**C412_7.1 P132 BN132MA4**	143
206	330	1.9	7.0	6970	**C512_7.0 S4 M4LA4**	146	**C512_7.0 P132 BN132MA4**	147
212	322	1.1	6.8	2900	**C362_6.8 S4 M4LA4**	138	**C362_6.8 P132 BN132MA4**	139
226	301	1.1	6.4	3440	**C412_6.4 S4 M4LA4**	142	**C412_6.4 P132 BN132MA4**	143
240	284	2.3	6.0	9180	**C612_6.0 S4 M4LA4**	150	**C612_6.0 P132 BN132MA4**	151
242	281	0.9	6.0	2920	**C412_6.0 S4 M4LA4**	142	**C412_6.0 P132 BN132MA4**	143
256	266	1.6	5.6	6410	**C512_5.6 S4 M4LA4**	146	**C512_5.6 P132 BN132MA4**	147
309	220	1.2	4.7	2960	**C412_4.7 S4 M4LA4**	142	**C412_4.7 P132 BN132MA4**	143
312	220	0.9	4.6	2600	**C362_4.6 S4 M4LA4**	138	**C362_4.6 P132 BN132MA4**	139
316	215	3.1	4.6	8550	**C612_4.6 S4 M4LA4**	150	**C612_4.6 P132 BN132MA4**	151
323	210	2.1	4.5	6090	**C512_4.5 S4 M4LA4**	146	**C512_4.5 P132 BN132MA4**	147
339	201	3.3	2.8	8390	**C612_2.8 S5 M5SA6**	150	**C612_2.8 P160 BN160M6**	151
343	199	1.0	4.2	2550	**C362_4.2 S4 M4LA4**	138	**C362_4.2 P132 BN132MA4**	139
363	187	2.1	2.6	5920	**C512_2.6 S5 M5SA6**	146	**C512_2.6 P160 BN160M6**	147
399	171	1.5	3.6	2930	**C412_3.6 S4 M4LA4**	142	**C412_3.6 P132 BN132MA4**	143
410	166	1.7	7.1	3240	**C412_7.1 S4 M4SB2**	142	**C412_7.1 P132 BN132SB2**	143
413	166	1.2	3.5	2500	**C362_3.5 S4 M4LA4**	138	**C362_3.5 P132 BN132MA4**	139
435	156	2.7	3.3	5660	**C512_3.3 S4 M4LA4**	146	**C512_3.3 P132 BN132MA4**	147
453	151	1.3	3.2	2500	**C362_3.2 S4 M4LA4**	138	**C362_3.2 P132 BN132MA4**	139
456	149	1.8	6.4	3170	**C412_6.4 S4 M4SB2**	142	**C412_6.4 P132 BN132SB2**	143
487	140	1.9	6.0	2880	**C412_6.0 S4 M4SB2**	142	**C412_6.0 P132 BN132SB2**	143
500	137	1.0	2.9	2100	**C322_2.9 S4 M4LA4**	134	**C322_2.9 P132 BN132MA4**	135
515	132	3.1	5.6	5420	**C512_5.6 S4 M4SB2**	146	**C512_5.6 P132 BN132SB2**	147
536	128	1.6	2.7	2440	**C362_2.7 S4 M4LA4**	138	**C362_2.7 P132 BN132MA4**	139
542	126	1.9	2.7	2840	**C412_2.7 S4 M4LA4**	142	**C412_2.7 P132 BN132MA4**	143
547	126	1.6	5.3	2370	**C362_5.3 S4 M4SB2**	138	**C362_5.3 P132 BN132SB2**	139
548	124	3.2	2.6	5330	**C512_2.6 S4 M4LA4**	146	**C512_2.6 P132 BN132MA4**	147
622	109	2.4	4.7	2790	**C412_4.7 S4 M4SB2**	142	**C412_4.7 P132 BN132SB2**	143
630	109	1.8	4.6	2330	**C362_4.6 S4 M4SB2**	138	**C362_4.6 P132 BN132SB2**	139
690	100	2.0	4.2	2290	**C362_4.2 S4 M4SB2**	138	**C362_4.2 P132 BN132SB2**	139
803	85	3.0	3.6	2670	**C412_3.6 S4 M4SB2**	142	**C412_3.6 P132 BN132SB2**	143
829	83	2.4	3.5	2210	**C362_3.5 S4 M4SB2**	138	**C362_3.5 P132 BN132SB2**	139
906	76	2.6	3.2	2170	**C362_3.2 S4 M4SB2**	138	**C362_3.2 P132 BN132SB2**	139
1074	64	3.1	2.7	2100	**C362_2.7 S4 M4SB2**	138	**C362_2.7 P132 BN132SB2**	139

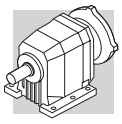

9.2 kW

n_2 min^{-1}	M_2 Nm	S	i	R_{n2} N			IEC	
7.2	11082	1.1	199.6	85000	**C1004_199.6 S4 M4LB4**	163	**C1004_199.6 P132 BN132MB4**	164
7.8	10294	1.2	185.4	85000	**C1004_185.4 S4 M4LB4**	163	**C1004_185.4 P132 BN132MB4**	164
9.6	8536	1.4	150.4	85000	**C1003_150.4 S4 M4LB4**	163	**C1003_150.4 P132 BN132MB4**	164
10.7	7611	0.9	134.1	54900	**C903_134.1 S4 M4LB4**	160	**C903_134.1 P132 BN132MB4**	161
13.5	6072	1.2	107.0	54600	**C903_107.0 S4 M4LB4**	160	**C903_107.0 P132 BN132MB4**	161
15.0	5461	1.3	96.2	54200	**C903_96.2 S4 M4LB4**	160	**C903_96.2 P132 BN132MB4**	161
15.5	5259	2.3	92.7	85000	**C1003_92.7 S4 M4LB4**	163	**C1003_92.7 P132 BN132MB4**	164
17.7	4608	1.6	81.2	53300	**C903_81.2 S4 M4LB4**	160	**C903_81.2 P132 BN132MB4**	161
19.3	4224	1.7	74.4	52700	**C903_74.4 S4 M4LB4**	160	**C903_74.4 P132 BN132MB4**	161
20.4	4001	1.0	70.5	35000	**C803_70.5 S4 M4LB4**	157	**C803_70.5 P132 BN132MB4**	158
24.3	3359	2.1	59.2	51100	**C903_59.2 S4 M4LB4**	160	**C903_59.2 P132 BN132MB4**	161
25.1	3251	1.2	57.3	35000	**C803_57.3 S4 M4LB4**	157	**C803_57.3 P132 BN132MB4**	158
28.6	2854	2.5	50.3	49700	**C903_50.3 S4 M4LB4**	160	**C903_50.3 P132 BN132MB4**	161
30	2692	1.4	47.4	34900	**C803_47.4 S4 M4LB4**	157	**C803_47.4 P132 BN132MB4**	158
32	2536	0.9	44.7	21100	**C703_44.7 S4 M4LB4**	154	**C703_44.7 P132 BN132MB4**	155
33	2468	1.5	43.5	34400	**C803_43.5 S4 M4LB4**	157	**C803_43.5 P132 BN132MB4**	158
35	2341	1.0	41.3	21000	**C703_41.3 S4 M4LB4**	154	**C703_41.3 P132 BN132MB4**	155
37	2267	1.4	39.1	32300	**C802_39.1 S4 M4LB4**	157	**C802_39.1 P132 BN132MB4**	158
41	2034	2.7	35.1	46200	**C902_35.1 S4 M4LB4**	160	**C902_35.1 P132 BN132MB4**	161
41	2014	1.0	34.7	19200	**C702_34.7 S4 M4LB4**	154	**C702_34.7 P132 BN132MB4**	155
46	1816	2.0	31.3	31100	**C802_31.3 S4 M4LB4**	157	**C802_31.3 P132 BN132MB4**	158
49	1706	3.5	29.4	44600	**C902_29.4 S4 M4LB4**	160	**C902_29.4 P132 BN132MB4**	161
52	1607	1.3	27.7	18900	**C702_27.7 S4 M4LB4**	154	**C702_27.7 P132 BN132MB4**	155
58	1439	0.9	24.8	11800	**C612_24.8 S4 M4LB4**	150	**C612_24.8 P132 BN132MB4**	151
63	1325	1.6	22.9	18500	**C702_22.9 S4 M4LB4**	154	**C702_22.9 P132 BN132MB4**	155
64	1296	1.0	22.4	11700	**C612_22.4 S4 M4LB4**	150	**C612_22.4 P132 BN132MB4**	151
65	1289	2.9	22.2	29200	**C802_22.2 S4 M4LB4**	157	**C802_22.2 P132 BN132MB4**	158
73	1136	1.2	19.6	11600	**C612_19.6 S4 M4LB4**	150	**C612_19.6 P132 BN132MB4**	151
75	1118	1.9	19.3	18100	**C702_19.3 S4 M4LB4**	154	**C702_19.3 P132 BN132MB4**	155
82	1023	1.3	17.7	11400	**C612_17.7 S4 M4LB4**	150	**C612_17.7 P132 BN132MB4**	151
86	968	2.1	16.7	17500	**C702_16.7 S4 M4LB4**	154	**C702_16.7 P132 BN132MB4**	155
90	923	1.5	15.9	11200	**C612_15.9 S4 M4LB4**	150	**C612_15.9 P132 BN132MB4**	151
94	889	2.4	15.3	17500	**C702_15.3 S4 M4LB4**	154	**C702_15.3 P132 BN132MB4**	155
96	867	0.9	15.0	7430	**C512_15.0 S4 M4LB4**	146	**C512_15.0 P132 BN132MB4**	147
100	832	1.6	14.3	11000	**C612_14.3 S4 M4LB4**	150	**C612_14.3 P132 BN132MB4**	151
102	817	2.6	14.1	17000	**C702_14.1 S4 M4LB4**	154	**C702_14.1 P132 BN132MB4**	155
110	761	1.0	13.1	7340	**C512_13.1 S4 M4LB4**	146	**C512_13.1 P132 BN132MB4**	147
111	755	2.8	13.0	17000	**C702_13.0 S4 M4LB4**	154	**C702_13.0 P132 BN132MB4**	155
119	701	1.9	12.1	10700	**C612_12.1 S4 M4LB4**	150	**C612_12.1 P132 BN132MB4**	151
122	686	1.1	11.8	7280	**C512_11.8 S4 M4LB4**	146	**C512_11.8 P132 BN132MB4**	147
127	658	3.2	22.9	16500	**C702_22.9 S4 M4LA2**	154	**C702_22.9 P132 BN132M2**	155
132	631	2.1	10.9	10500	**C612_10.9 S4 M4LB4**	150	**C612_10.9 P132 BN132MB4**	151
147	569	2.4	9.8	10300	**C612_9.8 S4 M4LB4**	150	**C612_9.8 P132 BN132MB4**	151
148	565	1.2	9.8	7080	**C512_9.8 S4 M4LB4**	146	**C512_9.8 P132 BN132MB4**	147
163	513	2.6	8.8	10000	**C612_8.8 S4 M4LB4**	150	**C612_8.8 P132 BN132MB4**	151
164	510	1.3	8.8	6990	**C512_8.8 S4 M4LB4**	146	**C512_8.8 P132 BN132MB4**	147
186	449	1.4	7.8	6820	**C512_7.8 S4 M4LB4**	146	**C512_7.8 P132 BN132MB4**	147
192	434	3.1	7.5	9670	**C612_7.5 S4 M4LB4**	150	**C612_7.5 P132 BN132MB4**	151
206	405	1.6	7.0	6710	**C512_7.0 S4 M4LB4**	146	**C512_7.0 P132 BN132MB4**	147
212	393	0.9	6.8	2600	**C362_6.8 S4 M4LB4**	138	**C362_6.8 P132 BN132MB4**	139
214	391	3.5	6.7	9410	**C612_6.7 S4 M4LB4**	150	**C612_6.7 P132 BN132MB4**	151

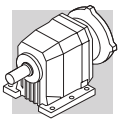

9.2 kW

n_2 min^{-1}	M_2 Nm	S	i	R_{n2} N			IEC	
226	369	0.9	6.4	3100	**C412_6.4 S4 M4LB4**	142	**C412_6.4 P132 BN132MB4**	143
240	348	1.9	6.0	8930	**C612_6.0 S4 M4LB4**	150	**C612_6.0 P132 BN132MB4**	151
256	326	1.3	5.6	6150	**C512_5.6 S4 M4LB4**	146	**C512_5.6 P132 BN132MB4**	147
260	321	1.0	11.2	3110	**C412_11.2 S4 M4LA2**	142	**C412_11.2 P132 BN132M2**	143
309	270	1.0	4.7	2620	**C412_4.7 S4 M4LB4**	142	**C412_4.7 P132 BN132MB4**	143
316	264	2.5	4.6	8360	**C612_4.6 S4 M4LB4**	150	**C612_4.6 P132 BN132MB4**	151
323	258	1.7	4.5	5880	**C512_4.5 S4 M4LB4**	146	**C512_4.5 P132 BN132MB4**	147
336	249	1.2	8.6	3090	**C412_8.6 S4 M4LA2**	142	**C412_8.6 P132 BN132M2**	143
374	223	2.3	7.8	5870	**C512_7.8 S4 M4LA2**	146	**C512_7.8 P132 BN132M2**	147
399	209	1.2	3.6	2670	**C412_3.6 S4 M4LB4**	142	**C412_3.6 P132 BN132MB4**	143
410	203	1.4	7.1	3050	**C412_7.1 S4 M4LA2**	142	**C412_7.1 P132 BN132M2**	143
413	202	1.0	3.5	2300	**C362_3.5 S4 M4LB4**	138	**C362_3.5 P132 BN132MB4**	139
415	201	2.5	7.0	5730	**C512_7.0 S4 M4LA2**	146	**C512_7.0 P132 BN132M2**	147
435	192	2.2	3.3	5510	**C512_3.3 S4 M4LB4**	146	**C512_3.3 P132 BN132MB4**	147
453	184	1.1	3.2	2300	**C362_3.2 S4 M4LB4**	138	**C362_3.2 P132 BN132MB4**	139
456	183	1.5	6.4	3000	**C412_6.4 S4 M4LA2**	142	**C412_6.4 P132 BN132M2**	143
487	171	1.5	6.0	2660	**C412_6.0 S4 M4LA2**	142	**C412_6.0 P132 BN132M2**	143
515	162	2.6	5.6	5290	**C512_5.6 S4 M4LA2**	146	**C512_5.6 P132 BN132M2**	147
536	156	1.3	2.7	2280	**C362_2.7 S4 M4LB4**	138	**C362_2.7 P132 BN132MB4**	139
542	154	1.6	2.7	2650	**C412_2.7 S4 M4LB4**	142	**C412_2.7 P132 BN132MB4**	143
548	152	2.6	2.6	5210	**C512_2.6 S4 M4LB4**	146	**C512_2.6 P132 BN132MB4**	147
622	134	1.9	4.7	2620	**C412_4.7 S4 M4LA2**	142	**C412_4.7 P132 BN132M2**	143
651	128	3.4	4.5	4980	**C512_4.5 S4 M4LA2**	146	**C512_4.5 P132 BN132M2**	147
698	120	1.7	4.2	2180	**C362_4.2 S4 M4LA2**	138	**C362_4.2 P132 BN132M2**	139
803	104	2.5	3.6	2540	**C412_3.6 S4 M4LA2**	142	**C412_3.6 P132 BN132M2**	143
837	100	2.0	3.5	2120	**C362_3.5 S4 M4LA2**	138	**C362_3.5 P132 BN132M2**	139
916	91	2.2	3.2	2090	**C362_3.2 S4 M4LA2**	138	**C362_3.2 P132 BN132M2**	139
1091	77	3.2	2.7	2410	**C412_2.7 S4 M4LA2**	142	**C412_2.7 P132 BN132M2**	143
1091	77	2.6	2.7	2020	**C362_2.7 S4 M4LA2**	138	**C362_2.7 P132 BN132M2**	139

11 kW

n_2 min^{-1}	M_2 Nm	S	i	R_{n2} N			IEC	
7.2	13251	0.9	199.6	85000	**C1004_199.6 S4 M4LC4**	163	**C1004_199.6 P160 BN160MR4**	164
9.6	10206	1.2	150.4	85000	**C1003_150.4 S4 M4LC4**	163	**C1003_150.4 P160 BN160MR4**	164
12.3	7920	0.9	116.7	50800	**C903_116.7 S4 M4LC4**	160	**C903_116.7 P160 BN160MR4**	161
12.9	7592	1.6	111.9	85000	**C1003_111.9 S4 M4LC4**	163	**C1003_111.9 P160 BN160MR4**	164
15.5	6287	1.9	92.7	85000	**C1003_92.7 S4 M4LC4**	163	**C1003_92.7 P160 BN160MR4**	164
16.3	5985	1.2	88.2	50700	**C903_88.2 S4 M4LC4**	160	**C903_88.2 P160 BN160MR4**	161
19.3	5051	1.4	74.4	50200	**C903_74.4 S4 M4LC4**	160	**C903_74.4 P160 BN160MR4**	161
20.7	4710	2.5	69.4	84800	**C1003_69.4 S4 M4LC4**	163	**C1003_69.4 P160 BN160MR4**	164
24.3	4016	1.8	59.2	49000	**C903_59.2 S4 M4LC4**	160	**C903_59.2 P160 BN160MR4**	161
25.1	3887	1.0	57.3	34200	**C803_57.3 S4 M4LC4**	157	**C803_57.3 P160 BN160MR4**	158
28.6	3413	2.1	50.3	48000	**C903_50.3 S4 M4LC4**	160	**C903_50.3 P160 BN160MR4**	161
30	3219	1.2	47.4	33500	**C803_47.4 S4 M4LC4**	157	**C803_47.4 P160 BN160MR4**	158
33	2951	1.3	43.5	33100	**C803_43.5 S4 M4LC4**	157	**C803_43.5 P160 BN160MR4**	158
37	2673	2.7	39.4	46100	**C903_39.4 S4 M4LC4**	160	**C903_39.4 P160 BN160MR4**	161
37	2711	1.2	39.1	30900	**C802_39.1 S4 M4LC4**	157	**C802_39.1 P160 BN160MR4**	158

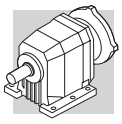

11 kW

n_2 min^{-1}	M_2 Nm	S	i	R_{n2} N			IEC	
41	2432	2.2	35.1	45000	**C902_35.1 S4 M4LC4**	160	**C902_35.1 P160 BN160MR4**	161
46	2172	1.7	31.3	30000	**C802_31.3 S4 M4LC4**	157	**C802_31.3 P160 BN160MR4**	158
52	1921	1.1	27.7	17800	**C702_27.7 S4 M4LC4**	154	**C702_27.7 P160 BN160MR4**	155
55	1798	2.1	25.9	29200	**C802_25.9 S4 M4LC4**	157	**C802_25.9 P160 BN160MR4**	158
63	1584	1.3	22.9	17600	**C702_22.9 S4 M4LC4**	154	**C702_22.9 P160 BN160MR4**	155
65	1542	2.4	22.2	28400	**C802_22.2 S4 M4LC4**	157	**C802_22.2 P160 BN160MR4**	158
70	1423	2.5	20.5	28000	**C802_20.5 S4 M4LC4**	157	**C802_20.5 P160 BN160MR4**	158
73	1358	1.0	19.6	10800	**C612_19.6 S4 M4LC4**	150	**C612_19.6 P160 BN160MR4**	151
75	1337	1.6	19.3	17300	**C702_19.3 S4 M4LC4**	154	**C702_19.3 P160 BN160MR4**	155
80	1251	3.0	18.1	27300	**C802_18.1 S4 M4LC4**	157	**C802_18.1 P160 BN160MR4**	158
82	1223	1.1	17.7	10700	**C612_17.7 S4 M4LC4**	150	**C612_17.7 P160 BN160MR4**	151
86	1158	1.8	16.7	16800	**C702_16.7 S4 M4LC4**	154	**C702_16.7 P160 BN160MR4**	155
86	1155	3.0	16.7	26900	**C802_16.7 S4 M4LC4**	157	**C802_16.7 P160 BN160MR4**	158
90	1104	1.2	15.9	10700	**C612_15.9 S4 M4LC4**	150	**C612_15.9 P160 BN160MR4**	151
94	1063	2.0	15.3	16800	**C702_15.3 S4 M4LC4**	154	**C702_15.3 P160 BN160MR4**	155
100	994	1.4	14.3	10500	**C612_14.3 S4 M4LC4**	150	**C612_14.3 P160 BN160MR4**	151
102	977	2.2	14.1	16400	**C702_14.1 S4 M4LC4**	154	**C702_14.1 P160 BN160MR4**	155
111	903	2.3	13.0	16400	**C702_13.0 S4 M4LC4**	154	**C702_13.0 P160 BN160MR4**	155
119	838	1.6	12.1	10300	**C612_12.1 S4 M4LC4**	150	**C612_12.1 P160 BN160MR4**	151
122	820	0.9	11.8	6810	**C512_11.8 S4 M4LC4**	146	**C512_11.8 P160 BN160MR4**	147
128	777	2.8	11.2	15800	**C702_11.2 S4 M4LC4**	154	**C702_11.2 P160 BN160MR4**	155
132	755	1.8	10.9	10100	**C612_10.9 S4 M4LC4**	150	**C612_10.9 P160 BN160MR4**	151
141	707	3.0	10.2	15700	**C702_10.2 S4 M4LC4**	154	**C702_10.2 P160 BN160MR4**	155
147	680	2.0	9.8	9910	**C612_9.8 S4 M4LC4**	150	**C612_9.8 P160 BN160MR4**	151
148	676	1.0	9.8	6690	**C512_9.8 S4 M4LC4**	146	**C512_9.8 P160 BN160MR4**	147
151	660	3.3	9.5	15400	**C702_9.5 S4 M4LC4**	154	**C702_9.5 P160 BN160MR4**	155
163	613	2.2	8.8	9690	**C612_8.8 S4 M4LC4**	150	**C612_8.8 P160 BN160MR4**	151
164	609	1.1	8.8	6640	**C512_8.8 S4 M4LC4**	146	**C512_8.8 P160 BN160MR4**	147
186	537	1.2	7.8	6510	**C512_7.8 S4 M4LC4**	146	**C512_7.8 P160 BN160MR4**	147
192	519	2.6	7.5	9390	**C612_7.5 S4 M4LC4**	150	**C612_7.5 P160 BN160MR4**	151
206	484	1.3	7.0	6430	**C512_7.0 S4 M4LC4**	146	**C512_7.0 P160 BN160MR4**	147
214	467	2.9	6.7	9150	**C612_6.7 S4 M4LC4**	150	**C612_6.7 P160 BN160MR4**	151
240	416	1.6	6.0	8670	**C612_6.0 S4 M4LC4**	150	**C612_6.0 P160 BN160MR4**	151
256	390	1.1	5.6	5880	**C512_5.6 S4 M4LC4**	146	**C512_5.6 P160 BN160MR4**	147
290	344	1.2	3.3	5770	**C512_3.3 S5 M5SA6**	146	**C512_3.3 P160 BN160L6**	147
316	316	2.1	4.6	8160	**C612_4.6 S4 M4LC4**	150	**C612_4.6 P160 BN160MR4**	151
323	309	1.4	4.5	5660	**C512_4.5 S4 M4LC4**	146	**C512_4.5 P160 BN160MR4**	147
338	295	1.0	8.6	2850	**C412_8.6 S4 M4LC2**	142		
365	273	1.5	2.6	5540	**C512_2.6 S5 M5SA6**	146	**C512_2.6 P160 BN160L6**	147
389	256	2.6	3.7	7760	**C612_3.7 S4 M4LC4**	150	**C612_3.7 P160 BN160MR4**	151
399	250	1.0	3.6	2390	**C412_3.6 S4 M4LC4**	142		
413	242	1.2	7.1	2860	**C412_7.1 S4 M4LC2**	142		
435	229	1.8	3.3	5340	**C512_3.3 S4 M4LC4**	146	**C512_3.3 P160 BN160MR4**	147
459	217	1.3	6.4	2820	**C412_6.4 S4 M4LC2**	142		
491	203	1.3	6.0	2440	**C412_6.0 S4 M4LC2**	142		
511	195	3.4	2.8	7240	**C612_2.8 S4 M4LC4**	150	**C612_2.8 P160 BN160MR4**	151
519	192	2.2	5.6	5140	**C512_5.6 S4 M4LC2**	146	**C512_5.6 P160 BN160MA2**	147
542	184	1.3	2.7	2440	**C412_2.7 S4 M4LC4**	142		
548	182	2.2	2.6	5080	**C512_2.6 S4 M4LC4**	146	**C512_2.6 P160 BN160MR4**	147
626	159	1.6	4.7	2440	**C412_4.7 S4 M4LC2**	142		
656	152	2.9	4.5	4870	**C512_4.5 S4 M4LC2**	146	**C512_4.5 P160 BN160MA2**	147

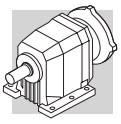

11 kW

n_2 min^{-1}	M_2 Nm	S	i	R_{n2} N			IEC	
809	123	2.1	3.6	2400	**C412_3.6 S4 M4LC2**	142		
1098	91	2.7	2.7	2300	**C412_2.7 S4 M4LC2**	142		

15 kW

n_2 min^{-1}	M_2 Nm	S	i	R_{n2} N			IEC	
10.5	12728	0.9	92.7	83900			**C1003_92.7 P180 BN180L6**	164
12.1	10997	1.1	120.5	83800	**C1003_120.5 S5 M5SB4**	163	**C1003_120.5 P160 BN160L4**	164
15.2	8782	0.8	96.2	43600	**C903_96.2 S5 M5SB4**	160	**C903_96.2 P160 BN160L4**	161
15.8	8456	1.4	92.7	82400	**C1003_92.7 S5 M5SB4**	163	**C1003_92.7 P160 BN160L4**	164
18.0	7411	1.0	81.2	44300	**C903_81.2 S5 M5SB4**	160	**C903_81.2 P160 BN160L4**	161
18.4	7249	1.7	79.4	81000	**C1003_79.4 S5 M5SB4**	163	**C1003_79.4 P160 BN160L4**	164
24.7	5402	1.3	59.2	44400	**C903_59.2 S5 M5SB4**	160	**C903_59.2 P160 BN160L4**	161
25.5	5233	2.3	57.4	77400	**C1003_57.4 S5 M5SB4**	163	**C1003_57.4 P160 BN160L4**	164
29.0	4590	1.5	50.3	44100	**C903_50.3 S5 M5SB4**	160	**C903_50.3 P160 BN160L4**	161
32	4218	2.8	46.2	74500	**C1003_46.2 S5 M5SB4**	163	**C1003_46.2 P160 BN160L4**	164
34	3968	1.0	43.5	30300	**C803_43.5 S5 M5SB4**	157	**C803_43.5 P160 BN160L4**	158
37	3595	2.0	39.4	43000	**C903_39.4 S5 M5SB4**	160	**C903_39.4 P160 BN160L4**	161
42	3272	1.7	35.1	42200	**C902_35.1 S5 M5SB4**	160	**C902_35.1 P160 BN160L4**	161
47	2921	1.3	31.3	27500	**C802_31.3 S5 M5SB4**	157	**C802_31.3 P160 BN160L4**	158
54	2533	2.2	27.2	40700	**C902_27.2 S5 M5SB4**	160	**C902_27.2 P160 BN160L4**	161
56	2419	1.5	25.9	27100	**C802_25.9 S5 M5SB4**	157	**C802_25.9 P160 BN160L4**	158
64	2136	2.9	22.9	39500	**C902_22.9 S5 M5SB4**	160	**C902_22.9 P160 BN160L4**	161
66	2073	1.8	22.2	26600	**C802_22.2 S5 M5SB4**	157	**C802_22.2 P160 BN160L4**	158
76	1798	1.2	19.3	15600	**C702_19.3 S5 M5SB4**	154	**C702_19.3 P160 BN160L4**	155
81	1683	2.2	18.1	25800	**C802_18.1 S5 M5SB4**	157	**C802_18.1 P160 BN160L4**	158
92	1485	0.9	15.9	9350	**C612_15.9 S5 M5SB4**	150	**C612_15.9 P160 BN160L4**	151
95	1429	1.5	15.3	15400	**C702_15.3 S5 M5SB4**	154	**C702_15.3 P160 BN160L4**	155
98	1390	2.7	14.9	25000	**C802_14.9 S5 M5SB4**	157	**C802_14.9 P160 BN160L4**	158
102	1337	1.0	14.3	9280	**C612_14.3 S5 M5SB4**	150	**C612_14.3 P160 BN160L4**	151
112	1215	1.7	13.0	15200	**C702_13.0 S5 M5SB4**	154	**C702_13.0 P160 BN160L4**	155
121	1127	1.2	12.1	9270	**C612_12.1 S5 M5SB4**	150	**C612_12.1 P160 BN160L4**	151
121	1120	3.3	12.0	24000	**C802_12.0 S5 M5SB4**	157	**C802_12.0 P160 BN160L4**	158
130	1045	2.1	11.2	14700	**C702_11.2 S5 M5SB4**	154	**C702_11.2 P160 BN160L4**	155
134	1015	1.3	10.9	9140	**C612_10.9 S5 M5SB4**	150	**C612_10.9 P160 BN160L4**	151
149	915	1.5	9.8	9090	**C612_9.8 S5 M5SB4**	150	**C612_9.8 P160 BN160L4**	151
153	888	2.4	9.5	14400	**C702_9.5 S5 M5SB4**	154	**C702_9.5 P160 BN160L4**	155
165	824	1.6	8.8	8930	**C612_8.8 S5 M5SB4**	150	**C612_8.8 P160 BN160L4**	151
182	746	2.8	8.0	14200			**C702_8.0 P160 BN160L4**	155
195	698	1.9	7.5	8760	**C612_7.5 S5 M5SB4**	150	**C612_7.5 P160 BN160L4**	151
209	651	1.0	7.0	5810			**C512_7.0 P160 BN160L4**	147
217	628	2.1	6.7	8570	**C612_6.7 S5 M5SB4**	150	**C612_6.7 P160 BN160L4**	151
223	610	1.0	13.1	5760			**C512_13.1 P160 BN160MB2**	147
242	562	2.4	12.1	8430	**C612_12.1 S5 M5SB2**	150	**C612_12.1 P160 BN160MB2**	151
248	550	1.1	11.8	5720			**C512_11.8 P160 BN160MB2**	147
269	506	2.7	10.9	8230	**C612_10.9 S5 M5SB2**	150	**C612_10.9 P160 BN160MB2**	151
298	456	2.9	9.8	8090	**C612_9.8 S5 M5SB2**	150	**C612_9.8 P160 BN160MB2**	151
300	453	1.2	9.8	5570			**C512_9.8 P160 BN160MB2**	147

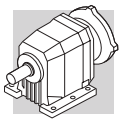

15 kW

n_2 min^{-1}	M_2 Nm	S	i	R_{n2} N			IEC	
320	425	1.6	4.6	7690	**C612_4.6 S5 M5SB4**	150	**C612_4.6 P160 BN160L4**	151
328	415	1.0	4.5	5170			**C512_4.5 P160 BN160L4**	147
331	411	3.2	8.8	7880	**C612_8.8 S5 M5SB2**	150	**C612_8.8 P160 BN160MB2**	151
333	408	1.3	8.8	5490			**C512_8.8 P160 BN160MB2**	147
378	360	1.4	7.8	5370			**C512_7.8 P160 BN160MB2**	147
395	345	1.9	3.7	7370	**C612_3.7 S5 M5SB4**	150	**C612_3.7 P160 BN160L4**	151
419	325	1.5	7.0	5280			**C512_7.0 P160 BN160MB2**	147
441	308	1.4	3.3	4970			**C512_3.3 P160 BN160L4**	147
488	279	2.4	6.0	7030	**C612_6.0 S5 M5SB2**	150	**C612_6.0 P160 BN160MB2**	151
518	263	2.5	2.8	6940	**C612_2.8 S5 M5SB4**	150	**C612_2.8 P160 BN160L4**	151
520	262	1.6	5.6	4840			**C512_5.6 P160 BN160MB2**	147
555	245	1.6	2.6	4780			**C512_2.6 P160 BN160L4**	147
643	212	3.1	4.6	6580	**C612_4.6 S5 M5SB2**	150	**C612_4.6 P160 BN160MB2**	151
658	207	2.1	4.5	4630			**C512_4.5 P160 BN160MB2**	147
886	154	2.7	3.3	4330			**C512_3.3 P160 BN160MB2**	147
1115	122	3.3	2.6	4100			**C512_2.6 P160 BN160MB2**	147

18.5 kW

n_2 min^{-1}	M_2 Nm	S	i	R_{n2} N			IEC	
13.0	12594	1.0	111.9	76600	**C1003_111.9 S5 M5LA4**	163	**C1003_111.9 P180 BN180M4**	164
15.8	10429	1.2	92.7	76700	**C1003_92.7 S5 M5LA4**	163	**C1003_92.7 P180 BN180M4**	164
21.0	7813	1.5	69.4	75400	**C1003_69.4 S5 M5LA4**	163	**C1003_69.4 P180 BN180M4**	164
22.6	7268	1.0	64.6	40300	**C903_64.6 S5 M5LA4**	160	**C903_64.6 P180 BN180M4**	161
26.6	6175	1.2	54.9	40700	**C903_54.9 S5 M5LA4**	160	**C903_54.9 P180 BN180M4**	161
27.4	5993	2.0	53.3	73100	**C1003_53.3 S5 M5LA4**	163	**C1003_53.3 P180 BN180M4**	164
34	4837	1.5	43.0	40600	**C903_43.0 S5 M5LA4**	160	**C903_43.0 P180 BN180M4**	161
34	4831	2.5	42.9	70800	**C1003_42.9 S5 M5LA4**	163	**C1003_42.9 P180 BN180M4**	164
42	4035	1.3	35.1	39800	**C902_35.1 S5 M5LA4**	160	**C902_35.1 P180 BN180M4**	161
43	3860	3.0	34.3	68100	**C1003_34.3 S5 M5LA4**	163	**C1003_34.3 P180 BN180M4**	164
50	3384	1.7	29.4	39100	**C902_29.4 S5 M5LA4**	160	**C902_29.4 P180 BN180M4**	161
56	2983	1.2	25.9	25300	**C802_25.9 S5 M5LA4**	157	**C802_25.9 P180 BN180M4**	158
66	2557	1.4	22.2	25100	**C802_22.2 S5 M5LA4**	157	**C802_22.2 P180 BN180M4**	158
76	2217	0.9	19.3	14100	**C702_19.3 S5 M5LA4**	154	**C702_19.3 P180 BN180M4**	155
87	1920	1.1	16.7	13800	**C702_16.7 S5 M5LA4**	154	**C702_16.7 P180 BN180M4**	155
88	1916	1.8	16.7	24400	**C802_16.7 S5 M5LA4**	157	**C802_16.7 P180 BN180M4**	158
104	1620	1.3	14.1	13900	**C702_14.1 S5 M5LA4**	154	**C702_14.1 P180 BN180M4**	155
106	1582	2.2	13.8	23700	**C802_13.8 S5 M5LA4**	157	**C802_13.8 P180 BN180M4**	158
121	1390	1.0	12.1	8420	**C612_12.1 S5 M5LA4**	150	**C612_12.1 P180 BN180M4**	151
130	1289	1.7	11.2	13800	**C702_11.2 S5 M5LA4**	154	**C702_11.2 P180 BN180M4**	155
132	1275	2.7	11.1	22900	**C802_11.1 S5 M5LA4**	157	**C802_11.1 P180 BN180M4**	158
134	1252	1.1	10.9	8360	**C612_10.9 S5 M5LA4**	150	**C612_10.9 P180 BN180M4**	151
149	1129	1.2	9.8	8400	**C612_9.8 S5 M5LA4**	150	**C612_9.8 P180 BN180M4**	151
153	1095	2.0	9.5	13600	**C702_9.5 S5 M5LA4**	154	**C702_9.5 P180 BN180M4**	155
165	1019	3.4	8.9	21900	**C802_8.9 S5 M5LA4**	157	**C802_8.9 P180 BN180M4**	158
165	1016	1.3	8.8	8300	**C612_8.8 S5 M5LA4**	150	**C612_8.8 P180 BN180M4**	151
195	860	1.6	7.5	8230	**C612_7.5 S5 M5LA4**	150	**C612_7.5 P180 BN180M4**	151
217	775	1.7	6.7	8090	**C612_6.7 S5 M5LA4**	150	**C612_6.7 P180 BN180M4**	151

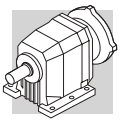

18.5 kW

n_2 min^{-1}	M_2 Nm	S	i	R_{n2} N			IEC	
233	719	2.7	6.3	13100			**C702_6.3 P180 BN180M4**	155
243	690	1.0	6.0	7550	**C612_6.0 S5 M5LA4**	150	**C612_6.0 P180 BN180M4**	151
250	673	2.8	5.9	12800			**C702_5.9 P180 BN180M4**	155
269	624	2.2	10.9	7840	**C612_10.9 S5 M5SC2**	150	**C612_10.9 P160BN160L2**	151
298	562	2.4	9.8	7740	**C612_9.8 S5 M5SC2**	150	**C612_9.8 P160BN160L2**	151
300	559	1.0	9.8	5190			**C512_9.8 P160BN160L2**	147
319	526	3.2	4.6	12300			**C702_4.6 P180 BN180M4**	155
320	524	1.3	4.6	7300	**C612_4.6 S5 M5LA4**	150	**C612_4.6 P180 BN180M4**	151
331	507	2.6	8.8	7570	**C612_8.8 S5 M5SC2**	150	**C612_8.8 P160BN160L2**	151
333	504	1.1	8.8	5160			**C512_8.8 P160BN160L2**	147
378	444	1.1	7.8	5070			**C512_7.8 P160BN160L2**	147
391	429	2.9	7.5	7350	**C612_7.5 S5 M5SC2**	150	**C612_7.5 P160BN160L2**	151
395	425	1.6	3.7	7060	**C612_3.7 S5 M5LA4**	150	**C612_3.7 P180 BN180M4**	151
419	400	1.2	7.0	5010			**C512_7.0 P160BN160L2**	147
435	386	3.1	6.7	7170	**C612_6.7 S5 M5SC2**	150	**C612_6.7 P160BN160L2**	151
441	380	1.1	3.3	4660			**C512_3.3 P180 BN180M4**	147
488	344	1.9	6.0	6780	**C612_6.0 S5 M5SC2**	150	**C612_6.0 P160BN160L2**	151
518	324	2.1	2.8	6700	**C612_2.8 S5 M5LA4**	150	**C612_2.8 P180 BN180M4**	151
520	323	1.3	5.6	4580			**C512_5.6 P160BN160L2**	147
555	302	1.3	2.6	4540			**C512_2.6 P180 BN180M4**	147
643	261	2.5	4.6	6390	**C612_4.6 S5 M5SC2**	150	**C612_4.6 P160BN160L2**	151
658	255	1.7	4.5	4420			**C512_4.5 P160BN160L2**	147
792	212	3.1	3.7	6080	**C612_3.7 S5 M5SC2**	150	**C612_3.7 P160BN160L2**	151
886	189	2.2	3.3	4180			**C512_3.3 P160BN160L2**	147
1115	151	2.7	2.6	3980			**C512_2.6 P160BN160L2**	147

22 kW

n_2 min^{-1}	M_2 Nm	S	i	R_{n2} N			IEC	
14.7	13266	0.9	99.8	70600			**C1003_99.8 P180 BN180L4**	164
18.5	10560	1.1	79.4	71200			**C1003_79.4 P180 BN180L4**	164
24.8	7869	0.9	59.2	36700			**C903_59.2 P180 BN180L4**	161
25.6	7623	1.6	57.4	70300			**C1003_57.4 P180 BN180L4**	164
29.2	6686	1.1	50.3	37400			**C903_50.3 P180 BN180L4**	161
32	6144	2.0	46.2	68800			**C1003_46.2 P180 BN180L4**	164
40	4909	2.4	36.9	66700			**C1003_36.9 P180 BN180L4**	164
42	4766	1.1	35.1	37400			**C902_35.1 P180 BN180L4**	161
50	4013	2.3	29.6	64100			**C1002_29.6 P180 BN180L4**	164
50	3997	1.5	29.4	37100			**C902_29.4 P180 BN180L4**	161
61	3252	1.1	24.0	23700			**C802_24.0 P180 BN180L4**	158
64	3112	2.0	22.9	36400			**C902_22.9 P180 BN180L4**	161
81	2451	1.5	18.1	23300			**C802_18.1 P180 BN180L4**	158
85	2350	2.8	17.3	34900			**C902_17.3 P180 BN180L4**	161
88	2268	0.9	16.7	12400			**C702_16.7 P180 BN180L4**	155
99	2025	1.8	14.9	22900			**C802_14.9 P180 BN180L4**	158
104	1914	1.1	14.1	12700			**C702_14.1 P180 BN180L4**	155
106	1881	3.2	13.9	33700			**C902_13.9 P180 BN180L4**	161
131	1522	1.4	11.2	12900			**C702_11.2 P180 BN180L4**	155

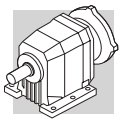

22 kW

n_2 min^{-1}	M_2 Nm	S	i	R_{n2} N			IEC	
133	1506	2.3	11.1	22100			**C802_11.1 P180 BN180L4**	158
135	1478	0.9	10.9	7580			**C612_10.9 P180 BN180L4**	151
150	1333	1.0	9.8	7710			**C612_9.8 P180 BN180L4**	151
154	1293	1.7	9.5	12800			**C702_9.5 P180 BN180L4**	155
166	1204	2.9	8.9	21300			**C802_8.9 P180 BN180L4**	158
166	1201	1.1	8.8	7660			**C612_8.8 P180 BN180L4**	151
184	1085	1.2	15.9	7710			**C612_15.9 P180 BN180M2**	151
196	1016	1.3	7.5	7690			**C612_7.5 P180 BN180L4**	151
197	1013	2.0	7.5	12700			**C702_7.5 P180 BN180L4**	155
209	956	3.5	7.0	20400			**C802_7.0 P180 BN180L4**	158
218	915	1.5	6.7	7600			**C612_6.7 P180 BN180L4**	151
251	794	2.4	5.9	12300			**C702_5.9 P180 BN180L4**	155
269	742	1.8	10.9	7460			**C612_10.9 P180 BN180M2**	151
298	669	2.0	9.8	7390			**C612_9.8 P180 BN180M2**	151
322	621	2.7	4.6	11900			**C702_4.6 P180 BN180L4**	155
323	619	1.1	4.6	6910			**C612_4.6 P180 BN180L4**	151
331	602	2.2	8.8	7250			**C612_8.8 P180 BN180M2**	151
333	599	0.9	8.8	4820			**C512_8.8 P180 BN180M2**	147
378	528	1.0	7.8	4770			**C512_7.8 P180 BN180M2**	147
391	510	2.4	7.5	7080			**C612_7.5 P180 BN180M2**	151
397	502	1.3	3.7	6740			**C612_3.7 P180 BN180L4**	151
419	476	1.1	7.0	4740			**C512_7.0 P180 BN180M2**	147
435	459	2.6	6.7	6920			**C612_6.7 P180 BN180M2**	151
444	449	0.9	3.3	4350			**C512_3.3 P180 BN180L4**	147
488	409	1.6	6.0	6530			**C612_6.0 P180 BN180M2**	151
520	384	1.1	5.6	4310			**C512_5.6 P180 BN180M2**	147
521	383	1.7	2.8	6450			**C612_2.8 P180 BN180L4**	151
559	357	1.1	2.6	4290			**C512_2.6 P180 BN180L4**	147
643	310	2.1	4.6	6200			**C612_4.6 P180 BN180M2**	151
658	303	1.4	4.5	4210			**C512_4.5 P180 BN180M2**	147
792	252	2.6	3.7	5930			**C612_3.7 P180 BN180M2**	151
886	225	1.9	3.3	4030			**C512_3.3 P180 BN180M2**	147
1039	192	3.5	2.8	5560			**C612_2.8 P180 BN180M2**	151
1115	179	2.2	2.6	3860			**C512_2.6 P180 BN180M2**	147

30 kW

n_2 min^{-1}	M_2 Nm	S	i	R_{n2} N			IEC	
21.2	12584	1.0	69.4	61300			**C1003_69.4 P200 BN200L4**	164
25.6	10395	1.2	57.4	62200			**C1003_57.4 P200 BN200L4**	164
32	8379	1.4	46.2	62300			**C1003_46.2 P200 BN200L4**	164
37	7142	1.0	39.4	31900			**C903_39.4 P200 BN200L4**	161
50	5472	1.7	29.6	59800			**C1002_29.6 P200 BN200L4**	164
50	5450	1.1	29.4	32600			**C902_29.4 P200 BN200L4**	161
64	4243	1.5	22.9	32900			**C902_22.9 P200 BN200L4**	161
66	4119	2.4	22.2	57700			**C1002_22.2 P200 BN200L4**	164
79	3459	1.8	18.7	32600			**C902_18.7 P200 BN200L4**	161
79	3456	3.1	18.7	56000			**C1002_18.7 P200 BN200L4**	164

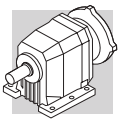

30 kW

n_2 min^{-1}	M_2 Nm	S	i	R_{n2} N			IEC	
99	2761	1.3	14.9	20600			**C802_14.9 P200 BN200L4**	158
106	2566	2.4	13.9	31500			**C902_13.9 P200 BN200L4**	161
122	2225	1.7	12.0	20500			**C802_12.0 P200 BN200L4**	158
131	2079	2.7	11.2	30600			**C902_11.2 P200 BN200L4**	161
153	1778	2.1	9.6	20100			**C802_9.6 P200 BN200L4**	158
154	1763	1.2	9.5	11000			**C702_9.5 P200 BN200L4**	155
184	1482	1.4	8.0	11600			**C702_8.0 P200 BN200L4**	155
193	1412	2.4	7.6	19500			**C802_7.6 P200 BN200L4**	158
209	1303	2.6	7.0	19300			**C802_7.0 P200 BN200L4**	158
235	1158	1.7	6.3	11500			**C702_6.3 P200 BN200L4**	155
241	1131	2.8	6.1	18900			**C802_6.1 P200 BN200L4**	158
261	1044	3.0	5.6	18600			**C802_5.6 P200 BN200L4**	158
322	846	2.0	4.6	11000			**C702_4.6 P200 BN200L4**	155

37 kW

n_2 min^{-1}	M_2 Nm	S	i	R_{n2} N			IEC	
25.8	12734	0.9	57.4	55300			**C1003_57.4 P225 BN225S4**	164
32	10264	1.2	46.2	56600			**C1003_46.2 P225 BN225S4**	164
40	8201	1.4	36.9	57000			**C1003_36.9 P225 BN225S4**	164
60	5631	1.2	24.8	29500			**C902_24.8 P225 BN225S4**	161
61	5467	2.0	24.1	55200			**C1002_24.1 P225 BN225S4**	164
79	4237	1.5	18.7	30100			**C902_18.7 P225 BN225S4**	161
79	4234	2.5	18.7	53600			**C1002_18.7 P225 BN225S4**	164
89	3779	0.9	16.7	18500			**C802_16.7 P225 BN225S4**	158
107	3143	1.9	13.9	29700			**C902_13.9 P225 BN225S4**	161
108	3122	1.1	13.8	18800			**C802_13.8 P225 BN225S4**	158
123	2726	1.4	12.0	18800			**C802_12.0 P225 BN225S4**	158
132	2546	2.2	11.2	29100			**C902_11.2 P225 BN225S4**	161
154	2178	1.7	9.6	18800			**C802_9.6 P225 BN225S4**	158
164	2046	2.5	9.0	28300			**C902_9.0 P225 BN225S4**	161
194	1730	2.0	7.6	18500			**C802_7.6 P225 BN225S4**	158
202	1661	2.9	7.3	27400			**C902_7.3 P225 BN225S4**	161
242	1386	2.3	6.1	18000			**C802_6.1 P225 BN225S4**	158
264	1271	3.5	5.6	26100			**C902_5.6 P225 BN225S4**	161
286	1173	3.7	5.2	25700			**C902_5.2 P225 BN225S4**	161

45 kW

n_2 min^{-1}	M_2 Nm	S	i	R_{n2} N			IEC	
32	12483	1.0	46.2	50200			**C1003_46.2 P225 BN225M4**	164
40	9974	1.2	36.9	51900			**C1003_36.9 P225 BN225M4**	164
50	8153	1.1	29.6	51900			**C1002_29.6 P225 BN225M4**	164
65	6322	1.0	22.9	26400			**C902_22.9 P225 BN225M4**	161
67	6137	1.6	22.2	51700			**C1002_22.2 P225 BN225M4**	164

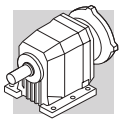

45 kW

n_2 min^{-1}	M_2 Nm	S	i	R_{n2} N			IEC	
79	5153	1.2	18.7	27200			**C902_18.7 P225 BN225M4**	161
79	5149	2.1	18.7	51000			**C1002_18.7 P225 BN225M4**	164
107	3822	1.6	13.9	27600			**C902_13.9 P225 BN225M4**	161
108	3797	0.9	13.8	16700			**C802_13.8 P225 BN225M4**	158
123	3315	1.1	12.0	17000			**C802_12.0 P225 BN225M4**	158
132	3097	1.8	11.2	27400			**C902_11.2 P225 BN225M4**	161
154	2649	1.4	9.6	17300			**C802_9.6 P225 BN225M4**	158
164	2488	2.1	9.0	26900			**C902_9.0 P225 BN225M4**	161
194	2104	1.6	7.6	17300			**C802_7.6 P225 BN225M4**	158
202	2020	2.4	7.3	26300			**C902_7.3 P225 BN225M4**	161
262	1556	2.0	5.6	17000			**C802_5.6 P225 BN225M4**	158
264	1546	2.8	5.6	25200			**C902_5.6 P225 BN225M4**	161
279	1464	2.9	5.2	25200			**C902_5.2 P225 BN225M4**	161

55 kW

n_2 min^{-1}	M_2 Nm	S	i	R_{n2} N			IEC	
40	12191	1.0	36.9	45400			**C1003_36.9 P250 BN250M4**	164
50	9965	0.9	29.6	46700			**C1002_29.6 P250 BN250M4**	164
61	8126	1.3	24.1	47500			**C1002_24.1 P250 BN250M4**	164
79	6298	1.0	18.7	22200			**C902_18.7 P250 BN250M4**	161
79	6294	1.7	18.7	47700			**C1002_18.7 P250 BN250M4**	164
107	4672	1.3	13.9	24900			**C902_13.9 P250 BN250M4**	161
110	4549	2.1	13.5	46500			**C1002_13.5 P250 BN250M4**	164
135	3686	2.4	10.9	45400			**C1002_10.9 P250 BN250M4**	164
164	3050	2.7	9.0	44100			**C1002_9.0 P250 BN250M4**	164
164	3041	1.7	9.0	25200			**C902_9.0 P250 BN250M4**	161
202	2468	2.0	7.3	24900			**C902_7.3 P250 BN250M4**	161
209	2383	3.2	7.1	42300			**C1002_7.1 P250 BN250M4**	164
264	1889	2.3	5.6	24200			**C902_5.6 P250 BN250M4**	161
286	1744	2.5	5.2	24000			**C902_5.2 P250 BN250M4**	161

75 kW

n_2 min^{-1}	M_2 Nm	S	i	R_{n2} N			IEC	
62	11044	1.0	24.1	38100			**C1002_ 24.1 P280 BN280S4**	164
67	10194	1.0	22.2	40000			**C1002_ 22.2 P280 BN280S4**	164
73	9266	1.2	20.2	40500			**C1002_ 20.2 P280 BN280S4**	164
80	8553	1.3	18.7	41100			**C1002_ 18.7 P280 BN280S4**	164
90	7552	1.3	16.5	41400			**C1002_ 16.5 P280 BN280S4**	164
98	6971	1.4	15.2	41800			**C1002_ 15.2 P280 BN280S4**	164
110	6182	1.5	13.5	41700			**C1002_ 13.5 P280 BN280S4**	164
119	5707	1.6	12.5	41800			**C1002_ 12.5 P280 BN280S4**	164
136	5010	1.8	10.9	41500			**C1002_ 10.9 P280 BN280S4**	164
147	4624	1.9	10.1	41400			**C1002_ 10.1 P280 BN280S4**	164

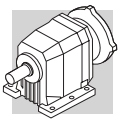

75 kW

n_2 min^{-1}	M_2 Nm	S	i	R_{n2} N			IEC	
164	4146	2.0	9.0	40900			**C1002_ 9.0 P280 BN280S4**	164
178	3827	2.1	8.4	40600			**C1002_ 8.4 P280 BN280S4**	164
210	3238	2.4	7.1	39700			**C1002_ 7.1 P280 BN280S4**	164
228	2989	2.5	6.5	39300			**C1002_ 6.5 P280 BN280S4**	164
278	2444	2.8	5.3	38100			**C1002_ 5.3 P280 BN280S4**	164
302	2256	3.0	4.9	37600			**C1002_ 4.9 P280 BN280S4**	164

90 kW

n_2 min^{-1}	M_2 Nm	S	i	R_{n2} N			IEC	
73	11119	1.0	20.2	30600			**C1002_20.2 P280 BN280M4**	164
80	10264	1.0	18.7	35500			**C1002_18.7 P280 BN280M4**	164
90	9062	1.1	16.5	37100			**C1002_16.5 P280 BN280M4**	164
98	8365	1.2	15.2	37800			**C1002_15.2 P280 BN280M4**	164
110	7419	1.3	13.5	38100			**C1002_13.5 P280 BN280M4**	164
119	6848	1.4	12.5	38500			**C1002_12.5 P280 BN280M4**	164
136	6012	1.5	10.9	38600			**C1002_10.9 P280 BN280M4**	164
147	5549	1.6	10.1	38700			**C1002_10.1 P280 BN280M4**	164
164	4975	1.7	9.0	38500			**C1002_9.0 P280 BN280M4**	164
178	4592	1.8	8.4	38400			**C1002_8.4 P280 BN280M4**	164
210	3886	2.0	7.1	37800			**C1002_7.1 P280 BN280M4**	164
228	3587	2.1	6.5	37600			**C1002_6.5 P280 BN280M4**	164
278	2933	2.4	5.3	36600			**C1002_5.3 P280 BN280M4**	164
302	2707	2.5	4.9	36300			**C1002_4.9 P280 BN280M4**	164

C 12 100 Nm

	i	n_1 = 2800 min^{-1}					n_1 = 1400 min^{-1}					
		n_2 min^{-1}	M_{n2} Nm	P_{n1} kW	R_{n1} N	R_{n2} N	n_2 min^{-1}	M_{n2} Nm	P_{n1} kW	R_{n1} N	R_{n2} N	
C 12 2_2.8	2.8	1012	30	3.3	750	600	506	37	2.1	990	790	
C 12 2_3.2	3.2	873	32	3.1	730	600	436	40	1.9	960	790	
C 12 2_3.7	3.7	767	34	2.9	720	610	383	42	1.8	960	800	
C 12 2_4.3	4.3	649	36	2.6	710	630	325	45	1.6	890	800	
C 12 2_4.9	4.9	575	38	2.4	710	640	288	48	1.5	880	800	
C 12 2_5.6	5.6	500	40	2.2	680	650	250	51	1.4	840	810	
C 12 2_6.2	6.2	449	42	2.1	650	660	225	53	1.3	810	830	
C 12 2_7.6	7.6	367	45	1.8	1140	1220	184	56	1.1	1300	1540	
C 12 2_8.8	8.8	317	47	1.6	1140	1280	158	59	1.0	1300	1620	
C 12 2_10.1	10.1	278	49	1.5	1150	1340	139	63	0.97	1300	1680	
C 12 2_11.9	11.9	236	53	1.4	1140	1390	118	67	0.87	1300	1760	
C 12 2_13.4	13.4	209	55	1.3	1140	1460	104	70	0.81	1300	1840	
C 12 2_15.4	15.4	182	58	1.2	1130	1500	91	73	0.73	1300	1930	129
C 12 2_17.2	17.2	163	60	1.1	1130	1590	82	76	0.68	1300	2000	
C 12 2_18.4	18.4	152	62	1.0	1120	1620	76	78	0.65	1300	2000	
C 12 2_20.6	20.6	136	65	1.0	1110	1670	68	82	0.61	1300	2000	
C 12 2_23.2	23.2	120	67	0.89	1110	1720	60	85	0.56	1300	2000	
C 12 2_25.4	25.4	110	69	0.84	1110	1800	55	88	0.54	1300	2000	
C 12 2_29.5	29.5	95	74	0.77	1100	1880	47	93	0.49	1300	2000	
C 12 2_32.8	32.8	85	75	0.71	1090	1970	43	90	0.42	1300	2000	
C 12 2_37.0	37.0	76	79	0.66	1070	2000	38	90	0.38	1300	2000	
C 12 2_42.3	42.3	66	84	0.61	1060	2000	33	100	0.36	1300	2000	
C 12 2_47.6	47.6	59	85	0.55	1050	2000	29.4	90	0.29	1300	2000	
C 12 2_55.2	55.2	51	89	0.50	1030	2000	25.4	90	0.25	1300	2000	
C 12 2_66.2	66.2	42	86	0.40	1060	2000	21.2	90	0.21	1300	2000	

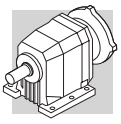

C 12 — 100 Nm

	i	n_1 = 900 min^{-1}					n_1 = 500 min^{-1}					
		n_2 min^{-1}	M_{n2} Nm	P_{n1} kW	R_{n1} N	R_{n2} N	n_2 min^{-1}	M_{n2} Nm	P_{n1} kW	R_{n1} N	R_{n2} N	
C 12 2_2.8	2.8	325	43	1.5	1140	910	181	53	1.1	1300	1080	
C 12 2_3.2	3.2	281	46	1.4	1100	910	156	57	1.0	1300	1080	
C 12 2_3.7	3.7	246	49	1.3	1090	920	137	60	0.91	1300	1100	
C 12 2_4.3	4.3	209	52	1.2	1050	920	116	64	0.82	1280	1100	
C 12 2_4.9	4.9	185	55	1.1	1050	960	103	67	0.76	1280	1160	
C 12 2_5.6	5.6	161	58	1.0	1000	980	89	69	0.68	1300	1280	
C 12 2_6.2	6.2	144	61	1.0	960	980	80	70	0.62	1300	1390	
C 12 2_7.6	7.6	118	65	0.85	1300	1780	66	79	0.57	1300	2000	
C 12 2_8.8	8.8	102	69	0.77	1300	1830	57	84	0.52	1300	2000	
C 12 2_10.1	10.1	89	72	0.71	1300	1950	50	88	0.48	1300	2000	
C 12 2_11.9	11.9	76	77	0.64	1300	2000	42	89	0.41	1300	2000	
C 12 2_13.4	13.4	67	81	0.60	1300	2000	37	90	0.37	1300	2000	
C 12 2_15.4	15.4	58	85	0.55	1300	2000	32	89	0.32	1300	2000	129
C 12 2_17.2	17.2	52	88	0.51	1300	2000	29.1	90	0.29	1300	2000	
C 12 2_18.4	18.4	49	88	0.47	1300	2000	27.2	89	0.27	1300	2000	
C 12 2_20.6	20.6	44	89	0.43	1300	2000	24.2	89	0.24	1300	2000	
C 12 2_23.2	23.2	39	89	0.38	1300	2000	21.5	89	0.21	1300	2000	
C 12 2_25.4	25.4	35	89	0.35	1300	2000	19.7	89	0.19	1300	2000	
C 12 2_29.5	29.5	31	100	0.34	1300	2000	16.9	100	0.19	1300	2000	
C 12 2_32.8	32.8	27.5	90	0.27	1300	2000	15.3	90	0.15	1300	2000	
C 12 2_37.0	37.0	24.3	90	0.24	1300	2000	13.5	90	0.13	1300	2000	
C 12 2_42.3	42.3	21.3	100	0.23	1300	2000	11.8	100	0.13	1300	2000	
C 12 2_47.6	47.6	18.9	90	0.19	1300	2000	10.5	90	0.10	1300	2000	
C 12 2_55.2	55.2	16.3	90	0.16	1300	2000	9.1	90	0.09	1300	2000	
C 12 2_66.2	66.2	13.6	90	0.13	1300	2000	7.6	90	0.07	1300	2000	

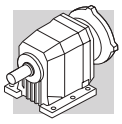

C 22 — 200 Nm

	i	n_1 = 2800 min^{-1}					n_1 = 1400 min^{-1}					
		n_2 min^{-1}	M_{n2} Nm	P_{n1} kW	R_{n1} N	R_{n2} N	n_2 min^{-1}	M_{n2} Nm	P_{n1} kW	R_{n1} N	R_{n2} N	
C 22 2_2.7	2.7	1029	65	7.4	—	1150	514	80	4.5	—	1460	
C 22 2_3.3	3.3	842	68	6.3	—	1230	421	85	3.9	—	1560	
C 22 2_3.7	3.7	755	70	5.8	—	1290	378	90	3.7	—	1610	
C 22 2_4.3	4.3	658	75	5.4	—	1320	329	94	3.4	—	1650	
C 22 2_4.8	4.8	587	80	5.2	—	1370	294	100	3.2	—	1730	
C 22 2_5.6	5.6	501	82	4.5	—	1410	250	102	2.8	—	1790	
C 22 2_6.1	6.1	460	85	4.3	—	1500	230	105	2.7	—	1900	
C 22 2_7.1	7.1	395	105	4.6	1090	1570	198	130	2.8	1420	1990	
C 22 2_8.7	8.7	324	110	3.9	1130	1680	162	138	2.5	1430	2090	
C 22 2_9.6	9.6	290	115	3.7	1160	1750	145	145	2.3	1460	2200	
C 22 2_11.1	11.1	253	120	3.3	1130	1820	126	153	2.1	1390	2270	
C 22 2_12.4	12.4	226	125	3.1	1160	1900	113	160	2.0	1420	2380	
C 22 2_14.5	14.5	193	133	2.8	1090	1980	96	168	1.8	1360	2450	
C 22 2_15.8	15.8	177	140	2.7	1030	2030	88	175	1.7	1320	2570	
C 22 2_18.1	18.1	154	145	2.5	1000	2140	77	183	1.6	1250	2650	
C 22 2_20.0	20.0	140	150	2.3	1000	2210	70	190	1.5	1250	2770	
C 22 2_21.5	21.5	131	153	2.2	970	2250	65	194	1.4	1190	2820	
C 22 2_24.3	24.3	115	160	2.0	980	2350	58	200	1.3	1250	2970	
C 22 2_27.2	27.2	103	166	1.9	960	2420	52	200	1.1	1340	3110	
C 22 2_29.6	29.6	95	175	1.8	850	2490	47	200	1.0	1350	3270	
C 22 2_33.1	33.1	85	178	1.7	840	2590	42	200	0.93	1390	3400	133
C 22 2_36.8	36.8	76	185	1.6	750	2690	38	200	0.84	1400	3610	
C 22 2_43.3	43.3	65	185	1.3	830	2910	32	190	0.68	1610	3950	
C 22 2_48.6	48.6	58	150	0.95	1300	3300	28.8	155	0.49	1740	4400	
C 22 2_54.7	54.7	51	150	0.85	1320	3470	25.6	155	0.44	1770	4600	
C 22 2_63.3	63.3	44	125	0.61	1400	3860	22.1	130	0.32	1820	5000	
C 22 3_60.0	60.0	47	180	0.93	840	3400	23.3	190	0.49	1230	4500	
C 22 3_65.3	65.3	43	200	0.94	880	3440	21.4	200	0.47	1270	4670	
C 22 3_74.8	74.8	37	200	0.83	940	3600	18.7	200	0.41	1270	4800	
C 22 3_82.6	82.6	34	200	0.75	1010	3820	16.9	200	0.37	1300	5000	
C 22 3_88.5	88.5	32	200	0.70	1040	3900	15.8	200	0.35	1300	5000	
C 22 3_100.2	100.2	28.0	200	0.62	1090	4160	14.0	200	0.31	1300	5000	
C 22 3_112.0	112.0	25.0	200	0.55	1130	4300	12.5	200	0.28	1300	5000	
C 22 3_122.2	122.2	22.9	200	0.51	1160	4540	11.5	200	0.25	1300	5000	
C 22 3_136.5	136.5	20.5	200	0.45	1180	4700	10.3	200	0.23	1300	5000	
C 22 3_151.7	151.7	18.5	200	0.41	1220	4980	9.2	200	0.20	1300	5000	
C 22 3_178.5	178.5	15.7	200	0.35	1260	5000	7.8	200	0.17	1300	5000	
C 22 3_200.7	200.7	14.0	190	0.29	1280	5000	7.0	190	0.15	1300	5000	
C 22 3_225.8	225.8	12.4	180	0.25	1300	5000	6.2	185	0.13	1300	5000	
C 22 3_261.0	261.0	10.7	145	0.17	1300	5000	5.4	155	0.09	1300	5000	

(—) Contact our technical service department advising radial load data (rotation direction, orientation, position)

Bonfiglioli Riduttori

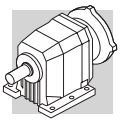

C 22 — 200 Nm

	i	n_1 = 900 min^{-1}					n_1 = 500 min^{-1}					
		n_2 min^{-1}	M_{n2} Nm	P_{n1} kW	R_{n1} N	R_{n2} N	n_2 min^{-1}	M_{n2} Nm	P_{n1} kW	R_{n1} N	R_{n2} N	
C 22 2_2.7	2.7	331	95	3.5	—	1670	184	100	2.0	400	2150	
C 22 2_3.3	3.3	271	100	3.0	—	1760	150	103	1.7	570	2300	
C 22 2_3.7	3.7	243	105	2.8	—	1850	135	105	1.6	800	2430	
C 22 2_4.3	4.3	211	105	2.4	—	1980	117	105	1.4	940	2550	
C 22 2_4.8	4.8	189	105	2.2	170	2090	105	105	1.2	1200	2710	
C 22 2_5.6	5.6	161	105	1.9	200	2250	89	112	1.1	1020	2850	
C 22 2_6.1	6.1	148	110	1.8	200	2290	82	116	1.1	980	2930	
C 22 2_7.1	7.1	127	150	2.1	1650	2310	71	180	1.4	2060	2820	
C 22 2_8.7	8.7	104	160	1.8	1650	2440	58	190	1.2	2100	3000	
C 22 2_9.6	9.6	93	170	1.7	1650	2530	52	200	1.1	2130	3130	
C 22 2_11.1	11.1	81	176	1.6	1640	2650	45	200	0.99	2170	3270	
C 22 2_12.4	12.4	73	185	1.5	1650	2760	40	200	0.89	2200	3520	
C 22 2_14.5	14.5	62	193	1.3	1610	2850	34	200	0.76	2200	3670	
C 22 2_15.8	15.8	57	200	1.3	1580	2990	32	200	0.70	2200	3920	
C 22 2_18.1	18.1	50	200	1.1	1650	3150	27.6	200	0.61	2200	4200	
C 22 2_20.0	20.0	45	200	0.99	1750	3340	25.0	200	0.55	2200	4350	
C 22 2_21.5	21.5	42	200	0.92	1760	3450	23.3	200	0.51	2200	4550	
C 22 2_24.3	24.3	37	200	0.82	1900	3650	20.6	200	0.45	2200	4720	
C 22 2_27.2	27.2	33	200	0.73	1950	3820	18.4	200	0.41	2200	5000	
C 22 2_29.6	29.6	30	200	0.67	1980	3990	16.9	200	0.37	2200	5000	
C 22 2_33.1	33.1	27.2	200	0.60	1970	4200	15.1	200	0.33	2200	5000	133
C 22 2_36.8	36.8	24.5	200	0.54	1990	4390	13.6	200	0.30	2200	5000	
C 22 2_43.3	43.3	20.8	190	0.44	2020	4770	11.6	190	0.24	2200	5000	
C 22 2_48.6	48.6	18.5	160	0.33	2050	5000	10.3	170	0.19	2200	5000	
C 22 2_54.7	54.7	16.4	160	0.29	2090	5000	9.1	170	0.17	2200	5000	
C 22 2_63.3	63.3	14.2	135	0.21	2140	5000	7.9	140	0.12	2200	5000	
C 22 3_60.0	60.0	15.0	190	0.31	1300	5000	8.3	200	0.18	1300	5000	
C 22 3_65.3	65.3	13.8	200	0.31	1300	5000	7.7	200	0.17	1300	5000	
C 22 3_74.8	74.8	12.0	200	0.27	1300	5000	6.7	200	0.15	1300	5000	
C 22 3_82.6	82.6	10.9	200	0.25	1300	5000	6.1	200	0.14	1300	5000	
C 22 3_88.5	88.5	10.2	200	0.22	1300	5000	5.6	200	0.12	1300	5000	
C 22 3_100.2	100.2	9.0	200	0.20	1300	5000	5.0	200	0.11	1300	5000	
C 22 3_112.0	112.0	8.0	200	0.18	1300	5000	4.5	200	0.10	1300	5000	
C 22 3_122.2	122.2	7.4	200	0.17	1300	5000	4.1	200	0.09	1300	5000	
C 22 3_136.5	136.5	6.6	200	0.15	1300	5000	3.7	200	0.08	1300	5000	
C 22 3_151.7	151.7	5.9	200	0.13	1300	5000	3.3	200	0.07	1300	5000	
C 22 3_178.5	178.5	5.0	200	0.11	1300	5000	2.8	200	0.06	1300	5000	
C 22 3_200.7	200.7	4.5	195	0.10	1300	5000	2.5	200	0.05	1300	5000	
C 22 3_225.8	225.8	4.0	195	0.09	1300	5000	2.2	200	0.05	1300	5000	
C 22 3_261.0	261.0	3.4	160	0.06	1300	5000	1.9	165	0.04	1300	5000	

(—) Contact our technical service department advising radial load data (rotation direction, orientation, position)

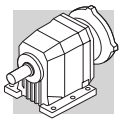

C 32 — 300 Nm

	i	n_1 = 2800 min^{-1}					n_1 = 1400 min^{-1}					
		n_2 min^{-1}	M_{n2} Nm	P_{n1} kW	R_{n1} N	R_{n2} N	n_2 min^{-1}	M_{n2} Nm	P_{n1} kW	R_{n1} N	R_{n2} N	
C 32 2_2.9	2.9	973	105	11.3	670	1710	486	130	7.0	940	2170	
C 32 2_3.4	3.4	821	116	10.5	480	1770	411	138	6.2	900	2280	
C 32 2_3.7	3.7	750	120	9.9	560	1830	375	150	6.2	750	2310	
C 32 2_4.5	4.5	622	129	8.8	450	1930	311	152	5.2	970	2500	
C 32 2_5.0	5.0	565	135	8.4	470	1990	283	155	4.8	1100	2600	
C 32 2_5.7	5.7	495	141	7.7	380	2080	248	155	4.2	1250	2760	
C 32 2_6.3	6.3	447	150	7.4	300	2130	223	155	3.8	1450	2890	
C 32 2_7.2	7.2	391	160	6.9	1890	2370	195	200	4.3	2200	2990	
C 32 2_8.5	8.5	330	168	6.1	1900	2510	165	209	3.8	2200	3180	
C 32 2_9.3	9.3	301	175	5.8	1910	2580	151	220	3.7	2200	3260	
C 32 2_11.2	11.2	250	187	5.2	1910	2740	125	231	3.2	2200	3480	
C 32 2_12.3	12.3	227	195	4.9	1910	2820	114	245	3.1	2200	3560	
C 32 2_14.1	14.1	199	205	4.5	1900	2940	99	251	2.8	2200	3750	
C 32 2_15.6	15.6	180	215	4.3	1900	3030	90	270	2.7	2200	3820	
C 32 2_18.2	18.2	154	223	3.8	1900	3210	77	275	2.3	2200	4070	
C 32 2_20.1	20.1	139	235	3.6	1900	3290	70	295	2.3	2200	4160	
C 32 2_22.9	22.9	122	240	3.2	1880	3470	61	295	2.0	2200	4400	
C 32 2_25.1	25.1	111	250	3.1	1890	3560	56	300	1.8	2200	4570	
C 32 2_26.9	26.9	104	255	2.9	1880	3650	52	300	1.7	2200	4700	
C 32 2_29.8	29.8	94	265	2.7	1880	3770	47	300	1.6	2200	4920	
C 32 2_33.1	33.1	85	270	2.5	1880	3920	42	300	1.4	2200	5150	137
C 32 2_36.1	36.1	78	280	2.4	1870	4030	39	300	1.3	2200	5350	
C 32 2_40.7	40.7	69	290	2.2	1860	4200	34	300	1.1	2200	5500	
C 32 2_45.3	45.3	62	300	2.0	1860	4360	31	300	1.0	2200	5500	
C 32 2_52.4	52.4	53	300	1.8	1860	4650	26.7	300	0.88	2200	5500	
C 32 2_59.4	59.4	47	205	1.1	2020	5000	23.6	215	0.56	2200	5500	
C 32 2_66.8	66.8	42	205	0.95	2020	5500	21.0	215	0.50	2200	5500	
C 32 3_74.7	74.7	37	280	1.2	750	5500	18.7	290	0.60	1170	5500	
C 32 3_82.6	82.6	34	300	1.1	820	5500	17.0	300	0.56	1240	5500	
C 32 3_94.2	94.2	29.7	300	0.98	900	5500	14.9	300	0.49	1270	5500	
C 32 3_103.3	103.3	27.1	300	0.90	980	5500	13.6	300	0.45	1300	5500	
C 32 3_110.6	110.6	25.3	300	0.84	1000	5500	12.7	300	0.42	1300	5500	
C 32 3_122.4	122.4	22.9	300	0.76	1060	5500	11.4	300	0.38	1300	5500	
C 32 3_136.0	136.0	20.6	300	0.68	1110	5500	10.3	300	0.34	1300	5500	
C 32 3_148.4	148.4	18.9	300	0.62	1130	5500	9.4	300	0.31	1300	5500	
C 32 3_167.4	167.4	16.7	300	0.55	1180	5500	8.4	300	0.28	1300	5500	
C 32 3_186.0	186.0	15.1	300	0.50	1200	5500	7.5	300	0.25	1300	5500	
C 32 3_215.6	215.6	13.0	300	0.43	1240	5500	6.5	300	0.21	1300	5500	
C 32 3_244.2	244.2	11.5	240	0.30	1280	5500	5.7	255	0.16	1300	5500	
C 32 3_274.7	274.7	10.2	240	0.27	1300	5500	5.1	255	0.14	1300	5500	

Bonfiglioli Riduttori

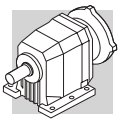

C 32 — 300 Nm

	i	n_1 = 900 min^{-1}					n_1 = 500 min^{-1}					
		n_2 min^{-1}	M_{n2} Nm	P_{n1} kW	R_{n1} N	R_{n2} N	n_2 min^{-1}	M_{n2} Nm	P_{n1} kW	R_{n1} N	R_{n2} N	
C 32 2_2.9	2.9	313	150	5.2	1120	2510	174	155	3.0	2200	3220	
C 32 2_3.4	3.4	264	152	4.4	1390	2690	147	167	2.7	2200	3390	
C 32 2_3.7	3.7	241	155	4.1	1570	2790	134	175	2.6	2200	3480	
C 32 2_4.5	4.5	200	158	3.5	1750	3010	111	188	2.3	2200	3690	
C 32 2_5.0	5.0	182	162	3.2	1870	3120	101	198	2.2	2200	3790	
C 32 2_5.7	5.7	159	171	3.0	1730	3250	88	198	1.9	2200	4010	
C 32 2_6.3	6.3	144	178	2.8	1730	3350	80	200	1.8	2200	4180	
C 32 2_7.2	7.2	126	235	3.3	2200	3450	70	285	2.2	2200	4200	
C 32 2_8.5	8.5	106	246	2.9	2200	3660	59	288	1.9	2200	4520	
C 32 2_9.3	9.3	97	260	2.8	2200	3750	54	300	1.8	2200	4640	
C 32 2_11.2	11.2	80	272	2.4	2200	4010	45	300	1.5	2200	5030	
C 32 2_12.3	12.3	73	285	2.3	2200	4120	41	300	1.3	2200	5250	
C 32 2_14.1	14.1	64	290	2.0	2200	4340	36	300	1.2	2200	5500	
C 32 2_15.6	15.6	58	300	1.9	2200	4500	32	300	1.1	2200	5500	
C 32 2_18.2	18.2	50	300	1.6	2200	4810	27.5	300	0.91	2200	5500	
C 32 2_20.1	20.1	45	300	1.5	2200	5030	24.9	300	0.82	2200	5500	
C 32 2_22.9	22.9	39	300	1.3	2200	5300	21.8	300	0.72	2200	5500	
C 32 2_25.1	25.1	36	300	1.2	2200	5500	19.9	300	0.66	2200	5500	
C 32 2_26.9	26.9	33	300	1.1	2200	5500	18.6	300	0.61	2200	5500	
C 32 2_29.8	29.8	30	300	1.0	2200	5500	16.8	300	0.56	2200	5500	
C 32 2_33.1	33.1	27.2	300	0.90	2200	5500	15.1	300	0.50	2200	5500	137
C 32 2_36.1	36.1	24.9	300	0.82	2200	5500	13.9	300	0.46	2200	5500	
C 32 2_40.7	40.7	22.1	300	0.73	2200	5500	12.3	300	0.41	2200	5500	
C 32 2_45.3	45.3	19.9	300	0.66	2200	5500	11.0	300	0.37	2200	5500	
C 32 2_52.4	52.4	17.2	300	0.57	2200	5500	9.5	300	0.32	2200	5500	
C 32 2_59.4	59.4	15.2	220	0.37	2200	5500	8.4	230	0.21	2200	5500	
C 32 2_66.8	66.8	13.5	220	0.33	2200	5500	7.5	230	0.19	2200	5500	
C 32 3_74.7	74.7	12.0	290	0.38	1300	5500	6.7	300	0.22	1300	5500	
C 32 3_82.6	82.6	10.9	300	0.36	1300	5500	6.1	300	0.20	1300	5500	
C 32 3_94.2	94.2	9.6	300	0.32	1300	5500	5.3	300	0.18	1300	5500	
C 32 3_103.3	103.3	8.7	300	0.29	1300	5500	4.8	300	0.16	1300	5500	
C 32 3_110.6	110.6	8.1	300	0.27	1300	5500	4.5	300	0.15	1300	5500	
C 32 3_122.4	122.4	7.4	300	0.24	1300	5500	4.1	300	0.14	1300	5500	
C 32 3_136.0	136.0	6.6	300	0.22	1300	5500	3.7	300	0.12	1300	5500	
C 32 3_148.4	148.4	6.1	300	0.20	1300	5500	3.4	300	0.11	1300	5500	
C 32 3_167.4	167.4	5.4	300	0.18	1300	5500	3.0	300	0.10	1300	5500	
C 32 3_186.0	186.0	4.8	300	0.16	1300	5500	2.7	300	0.09	1300	5500	
C 32 3_215.6	215.6	4.2	300	0.14	1300	5500	2.3	300	0.08	1300	5500	
C 32 3_244.2	244.2	3.7	260	0.11	1300	5500	2.0	275	0.06	1300	5500	
C 32 3_274.7	274.7	3.3	260	0.09	1300	5500	1.8	275	0.06	1300	5500	

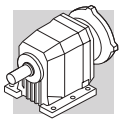

C 36 — 450 Nm

	i	n_1 = 2800 min^{-1}					n_1 = 1400 min^{-1}					
		n_2 min^{-1}	M_{n2} Nm	P_{n1} kW	R_{n1} N	R_{n2} N	n_2 min^{-1}	M_{n2} Nm	P_{n1} kW	R_{n1} N	R_{n2} N	
C 36 2_2.7	2.7	1042	140	16.1	670	1750	521	170	9.8	1150	2240	
C 36 2_3.2	3.2	880	145	14.1	790	1870	440	177	8.6	1240	2380	
C 36 2_3.5	3.5	803	150	13.3	910	1920	402	185	8.2	1320	2440	
C 36 2_4.2	4.2	667	157	11.5	920	2050	333	192	7.1	1410	2620	
C 36 2_4.6	4.6	606	165	11.0	920	2110	303	200	6.7	1470	2700	
C 36 2_5.3	5.3	530	167	9.8	990	2230	265	200	5.8	1650	2870	
C 36 2_5.8	5.8	479	170	9.0	1160	2330	239	200	5.3	1990	3020	
C 36 2_6.8	6.8	413	285	13.0	1750	2130	206	355	8.1	2220	2710	
C 36 2_8.0	8.0	349	297	11.4	1770	2270	174	365	7.0	2250	2910	
C 36 2_8.8	8.8	318	310	10.9	1780	2330	159	380	6.7	2270	3000	
C 36 2_10.6	10.6	264	325	9.5	1790	2500	132	380	5.5	2320	3290	
C 36 2_11.7	11.7	240	340	9.0	1790	2560	120	380	5.0	2370	3460	
C 36 2_13.3	13.3	210	350	8.1	1800	2700	105	380	4.4	2400	3670	
C 36 2_14.8	14.8	190	360	7.5	1800	2810	95	380	4.0	2440	3890	
C 36 2_17.2	17.2	163	370	6.6	1810	3000	81	380	3.4	2460	4200	
C 36 2_19.0	19.0	147	380	6.2	1820	3110	74	380	3.1	2500	4400	
C 36 3_22.1	22.1	127	340	4.7	2300	3570	63	430	3.0	2900	4490	
C 36 3_26.2	26.2	107	355	4.2	2300	3790	53	440	2.6	2910	4810	
C 36 3_28.7	28.7	98	385	4.1	2300	3820	49	450	2.4	2930	4980	
C 36 3_34.6	34.6	81	400	3.6	2300	4100	40	450	2.0	2950	5420	
C 36 3_38.1	38.1	74	435	3.5	2300	4140	37	450	1.8	2970	5690	
C 36 3_43.5	43.5	64	440	3.1	2300	4450	32	450	1.6	2980	6050	
C 36 3_48.2	48.2	58	450	2.9	2310	4580	29.1	450	1.4	2990	6330	
C 36 3_56.2	56.2	50	450	2.5	2320	4970	24.9	450	1.2	2990	6500	
C 36 3_62.0	62.0	45	450	2.2	2330	5170	22.6	450	1.1	3000	6500	141
C 36 3_70.8	70.8	40	450	2.0	2340	5520	19.8	450	0.98	3000	6500	
C 36 3_77.6	77.6	36	450	1.8	2350	5740	18.0	450	0.90	3000	6500	
C 36 3_83.1	83.1	34	450	1.7	2350	5930	16.8	450	0.84	3000	6500	
C 36 3_91.9	91.9	30	450	1.5	2360	6200	15.2	450	0.76	3000	6500	
C 36 3_102.2	102.2	27.4	450	1.4	2360	6400	13.7	450	0.68	3000	6500	
C 36 3_111.5	111.5	25.1	450	1.2	2360	6500	12.6	450	0.62	3000	6500	
C 36 3_125.8	125.8	22.3	450	1.1	2370	6500	11.1	450	0.55	3000	6500	
C 36 3_139.8	139.8	20.0	450	0.99	2370	6500	10.0	450	0.50	3000	6500	
C 36 3_162.0	162.0	17.3	450	0.86	2380	6500	8.6	450	0.43	3000	6500	
C 36 3_183.5	183.5	15.3	450	0.76	2380	6500	7.6	450	0.38	3000	6500	
C 36 3_206.4	206.4	13.6	450	0.67	2380	6500	6.8	450	0.34	3000	6500	
C 36 4_230.9	230.9	12.1	450	0.60	1150	6500	6.1	450	0.30	1300	6500	
C 36 4_255.0	255.0	11.0	450	0.54	1190	6500	5.5	450	0.27	1300	6500	
C 36 4_290.9	290.9	9.6	450	0.48	1210	6500	4.8	450	0.24	1300	6500	
C 36 4_318.9	318.9	8.8	450	0.44	1230	6500	4.4	450	0.22	1300	6500	
C 36 4_341.7	341.7	8.2	450	0.41	1240	6500	4.1	450	0.20	1300	6500	
C 36 4_377.9	377.9	7.4	450	0.37	1260	6500	3.7	450	0.18	1300	6500	
C 36 4_420.2	420.2	6.7	450	0.33	1270	6500	3.3	450	0.17	1300	6500	
C 36 4_458.4	458.4	6.1	450	0.30	1280	6500	3.1	450	0.15	1300	6500	
C 36 4_517.2	517.2	5.4	450	0.27	1300	6500	2.7	450	0.13	1300	6500	
C 36 4_574.7	574.7	4.9	450	0.24	1300	6500	2.4	450	0.12	1300	6500	
C 36 4_665.9	665.9	4.2	450	0.21	1300	6500	2.1	450	0.10	1300	6500	
C 36 4_754.2	754.2	3.7	450	0.18	1300	6500	1.9	450	0.09	1300	6500	
C 36 4_848.5	848.5	3.3	450	0.16	1300	6500	1.6	450	0.08	1300	6500	

Bonfiglioli Riduttori

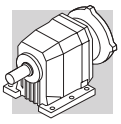

C 36 — 450 Nm

	i	n_1 = 900 min^{-1}					n_1 = 500 min^{-1}					
		n_2 min^{-1}	M_{n2} Nm	P_{n1} kW	R_{n1} N	R_{n2} N	n_2 min^{-1}	M_{n2} Nm	P_{n1} kW	R_{n1} N	R_{n2} N	
C 36 2_2.7	2.7	335	190	7.0	1670	2640	186	200	4.1	3000	3390	
C 36 2_3.2	3.2	283	190	5.9	2080	2790	157	200	3.5	3000	3650	
C 36 2_3.5	3.5	258	200	5.7	2160	2920	143	200	3.2	3000	3810	
C 36 2_4.2	4.2	214	200	4.7	2410	3170	119	200	2.6	3000	4100	
C 36 2_4.6	4.6	195	200	4.3	2590	3320	108	200	2.4	3000	4300	
C 36 2_5.3	5.3	171	200	3.8	2630	3500	95	200	2.1	3000	4520	
C 36 2_5.8	5.8	154	200	3.4	2680	3690	86	200	1.9	3000	4740	
C 36 2_6.8	6.8	133	380	5.6	2660	3290	74	380	3.1	3000	4400	
C 36 2_8.0	8.0	112	380	4.7	2720	3580	62	380	2.6	3000	4750	
C 36 2_8.8	8.8	102	380	4.3	2790	3750	57	380	2.4	3000	4960	
C 36 2_10.6	10.6	85	380	3.6	2850	4110	47	380	2.0	3000	5360	
C 36 2_11.7	11.7	77	380	3.2	2900	4300	43	380	1.8	3000	5630	
C 36 2_13.3	13.3	68	380	2.8	2930	4590	38	380	1.6	3000	5930	
C 36 2_14.8	14.8	61	380	2.6	2970	4800	34	380	1.4	3000	6240	
C 36 2_17.2	17.2	52	380	2.2	2980	5100	29.1	380	1.2	3000	6330	
C 36 2_19.0	19.0	47	380	2.0	3000	5390	26.3	380	1.1	3000	6500	
C 36 3_22.1	22.1	41	450	2.0	3000	5430	22.6	450	1.1	3000	6500	
C 36 3_26.2	26.2	34	450	1.7	3000	5850	19.1	450	0.95	3000	6500	
C 36 3_28.7	28.7	31	450	1.6	3000	6120	17.4	450	0.86	3000	6500	
C 36 3_34.6	34.6	26.0	450	1.3	3000	6500	14.5	450	0.72	3000	6500	
C 36 3_38.1	38.1	23.6	450	1.2	3000	6500	13.1	450	0.65	3000	6500	
C 36 3_43.5	43.5	20.7	450	1.0	3000	6500	11.5	450	0.57	3000	6500	
C 36 3_48.2	48.2	18.7	450	0.93	3000	6500	10.4	450	0.52	3000	6500	
C 36 3_56.2	56.2	16.0	450	0.79	3000	6500	8.9	450	0.44	3000	6500	
C 36 3_62.0	62.0	14.5	450	0.72	3000	6500	8.1	450	0.40	3000	6500	141
C 36 3_70.8	70.8	12.7	450	0.63	3000	6500	7.1	450	0.35	3000	6500	
C 36 3_77.6	77.6	11.6	450	0.58	3000	6500	6.4	450	0.32	3000	6500	
C 36 3_83.1	83.1	10.8	450	0.54	3000	6500	6.0	450	0.30	3000	6500	
C 36 3_91.9	91.9	9.8	450	0.49	3000	6500	5.4	450	0.27	3000	6500	
C 36 3_102.2	102.2	8.8	450	0.44	3000	6500	4.9	450	0.24	3000	6500	
C 36 3_111.5	111.5	8.1	450	0.40	3000	6500	4.5	450	0.22	3000	6500	
C 36 3_125.8	125.8	7.2	450	0.35	3000	6500	4.0	450	0.20	3000	6500	
C 36 3_139.8	139.8	6.4	450	0.32	3000	6500	3.6	450	0.18	3000	6500	
C 36 3_162.0	162.0	5.6	450	0.28	3000	6500	3.1	450	0.15	3000	6500	
C 36 3_183.5	183.5	4.9	450	0.24	3000	6500	2.7	450	0.14	3000	6500	
C 36 3_206.4	206.4	4.4	450	0.22	3000	6500	2.4	450	0.12	3000	6500	
C 36 4_230.9	230.9	3.9	450	0.19	1300	6500	2.2	450	0.11	1300	6500	
C 36 4_255.0	255.0	3.5	450	0.18	1300	6500	2.0	450	0.10	1300	6500	
C 36 4_290.9	290.9	3.1	450	0.15	1300	6500	1.7	450	0.09	1300	6500	
C 36 4_318.9	318.9	2.8	450	0.14	1300	6500	1.6	450	0.08	1300	6500	
C 36 4_341.7	341.7	2.6	450	0.13	1300	6500	1.5	450	0.07	1300	6500	
C 36 4_377.9	377.9	2.4	450	0.12	1300	6500	1.3	450	0.07	1300	6500	
C 36 4_420.2	420.2	2.1	450	0.11	1300	6500	1.2	450	0.06	1300	6500	
C 36 4_458.4	458.4	2.0	450	0.10	1300	6500	1.1	450	0.05	1300	6500	
C 36 4_517.2	517.2	1.7	450	0.09	1300	6500	1.0	450	0.05	1300	6500	
C 36 4_574.7	574.7	1.6	450	0.08	1300	6500	0.9	450	0.04	1300	6500	
C 36 4_665.9	665.9	1.4	450	0.07	1300	6500	0.8	450	0.04	1300	6500	
C 36 4_754.2	754.2	1.2	450	0.06	1300	6500	0.7	450	0.03	1300	6500	
C 36 4_848.5	848.5	1.1	450	0.05	1300	6500	0.6	450	0.03	1300	6500	

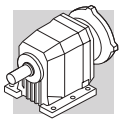

C 41 — 600 Nm

	i	n_1 = 2800 min^{-1}					n_1 = 1400 min^{-1}					
		n_2 min^{-1}	M_{n2} Nm	P_{n1} kW	R_{n1} N	R_{n2} N	n_2 min^{-1}	M_{n2} Nm	P_{n1} kW	R_{n1} N	R_{n2} N	
C 41 2_2.7	2.7	1037	245	28	980	1290	519	245	14.0	1390	2060	
C 41 2_3.6	3.6	778	255	22	1070	1540	389	255	10.9	1650	2390	
C 41 2_4.7	4.7	596	260	17.1	1170	1800	298	260	8.5	2010	2730	
C 41 2_6.0	6.0	467	260	13.4	1290	2100	233	260	6.7	2400	3110	
C 41 2_6.4	6.4	438	275	13.3	2270	2590	219	345	8.3	2860	3260	
C 41 2_7.1	7.1	394	285	12.4	2360	2700	197	355	7.7	2980	3420	
C 41 2_8.6	8.6	326	305	10.9	2300	2860	163	385	6.9	2900	3600	
C 41 2_9.6	9.6	292	310	10.0	2410	3010	146	390	6.3	3030	3800	
C 41 2_11.2	11.2	250	335	9.2	2310	3100	125	420	5.8	2910	3920	
C 41 2_12.4	12.4	226	340	8.5	2440	3270	113	425	5.3	3070	4140	
C 41 2_14.2	14.2	197	355	7.7	2330	3410	99	445	4.8	2980	4300	
C 41 2_15.8	15.8	177	360	7.0	2460	3590	89	450	4.4	3120	4540	
C 41 2_17.8	17.8	157	380	6.6	2330	3680	79	480	4.2	3050	4630	
C 41 2_19.8	19.8	141	385	6.0	2460	3880	71	485	3.8	3180	4890	
C 41 2_22.6	22.6	124	410	5.6	2320	3990	62	500	3.4	3110	5110	
C 41 2_25.0	25.0	112	415	5.1	2460	4210	56	500	3.1	3230	5420	
C 41 2_28.3	28.3	99	445	4.9	2310	4290	49	500	2.7	3180	5710	
C 41 2_31.4	31.4	89	445	4.4	2440	4550	45	500	2.5	3300	6040	
C 41 2_33.4	33.4	84	465	4.3	2390	4560	42	500	2.3	3220	6170	
C 41 2_37.1	37.1	75	470	3.9	2440	4810	38	500	2.1	3320	6520	
C 41 2_44.8	44.8	63	500	3.4	2660	5130	31	500	1.7	3500	7000	
C 41 3_28.5	28.5	98	445	4.9	3060	4300	49	560	3.1	3500	5420	
C 41 3_31.2	31.2	90	450	4.5	3090	4510	45	570	2.9	3500	5670	
C 41 3_36.8	36.8	76	480	4.1	3070	4710	38	600	2.6	3500	5960	
C 41 3_40.3	40.3	69	485	3.8	3100	4940	35	600	2.3	3500	6280	
C 41 3_47.0	47.0	60	515	3.5	3070	5140	29.8	600	2.0	3500	6720	
C 41 3_51.5	51.5	54	525	3.2	3090	5360	27.2	600	1.8	3500	7000	
C 41 3_58.7	58.7	48	550	3.0	3070	5550	23.9	600	1.6	3500	7000	145
C 41 3_64.3	64.3	44	560	2.7	3090	5800	21.8	600	1.5	3500	7000	
C 41 3_74.4	74.4	38	590	2.5	3060	6040	18.8	600	1.3	3500	7000	
C 41 3_81.5	81.5	34	600	2.3	3090	6310	17.2	600	1.2	3500	7000	
C 41 3_93.3	93.3	30	600	2.0	3080	6700	15.0	600	1.0	3500	7000	
C 41 3_102.3	102.3	27.4	600	1.8	3110	7000	13.7	600	0.92	3500	7000	
C 41 3_110.1	110.1	25.4	600	1.7	3090	7000	12.7	600	0.86	3500	7000	
C 41 3_120.6	120.6	23.2	600	1.6	3110	7000	11.6	600	0.78	3500	7000	
C 41 3_132.9	132.9	21.1	600	1.4	3090	7000	10.5	600	0.71	3500	7000	
C 41 3_145.6	145.6	19.2	600	1.3	3120	7000	9.6	600	0.65	3500	7000	
C 41 3_164.1	164.1	17.1	600	1.2	3100	7000	8.5	600	0.58	3500	7000	
C 41 3_179.9	179.9	15.6	600	1.1	3120	7000	7.8	600	0.53	3500	7000	
C 41 3_190.8	190.8	14.7	600	0.99	3110	7000	7.3	600	0.50	3500	7000	
C 41 3_209.1	209.1	13.4	600	0.90	3130	7000	6.7	600	0.45	3500	7000	
C 41 4_239.9	239.9	11.7	600	0.81	1480	7000	5.8	600	0.40	1910	7000	
C 41 4_263.0	263.0	10.6	600	0.74	1500	7000	5.3	600	0.37	1920	7000	
C 41 4_304.2	304.2	9.2	600	0.64	1520	7000	4.6	600	0.32	1950	7000	
C 41 4_333.4	333.4	8.4	600	0.58	1530	7000	4.2	600	0.29	1960	7000	
C 41 4_381.8	381.8	7.3	600	0.51	1540	7000	3.7	600	0.25	1970	7000	
C 41 4_418.5	418.5	6.7	600	0.46	1550	7000	3.3	600	0.23	1980	7000	
C 41 4_450.2	450.2	6.2	600	0.43	1560	7000	3.1	600	0.21	1990	7000	
C 41 4_493.5	493.5	5.7	600	0.39	1570	7000	2.8	600	0.20	2000	7000	
C 41 4_543.5	543.5	5.2	600	0.36	1570	7000	2.6	600	0.18	2000	7000	
C 41 4_595.8	595.8	4.7	600	0.32	1580	7000	2.3	600	0.16	2010	7000	
C 41 4_671.3	671.3	4.2	600	0.29	1590	7000	2.1	600	0.14	2020	7000	
C 41 4_735.9	735.9	3.8	600	0.26	1590	7000	1.9	600	0.13	2020	7000	
C 41 4_780.4	780.4	3.6	600	0.25	1600	7000	1.8	600	0.12	2030	7000	
C 41 4_855.5	855.5	3.3	600	0.23	1600	7000	1.6	600	0.11	2030	7000	

Bonfiglioli Riduttori

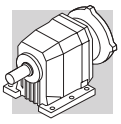

C 41 — 600 Nm

	i	n_1 = 900 min^{-1}					n_1 = 500 min^{-1}					
		n_2 min^{-1}	M_{n2} Nm	P_{n1} kW	R_{n1} N	R_{n2} N	n_2 min^{-1}	M_{n2} Nm	P_{n1} kW	R_{n1} N	R_{n2} N	
C 41 2_2.7	2.7	333	245	9.0	2560	2650	185	245	5.0	3500	3590	
C 41 2_3.6	3.6	250	255	7.0	2710	3050	139	255	3.9	3500	4090	
C 41 2_4.7	4.7	191	260	5.5	2900	3440	106	260	3.0	3500	4570	
C 41 2_6.0	6.0	150	260	4.3	3080	3890	83	260	2.4	3500	5110	
C 41 2_6.4	6.4	141	400	6.2	3310	3780	78	490	4.2	3500	4580	
C 41 2_7.1	7.1	127	415	5.8	3460	3940	70	500	3.9	3500	4820	
C 41 2_8.6	8.6	105	445	5.1	3360	4180	58	500	3.2	3500	5290	
C 41 2_9.6	9.6	94	450	4.7	3500	4410	52	500	2.9	3500	5600	
C 41 2_11.2	11.2	80	490	4.3	3500	4520	45	500	2.5	3500	5980	
C 41 2_12.4	12.4	73	495	4.0	3500	4780	40	500	2.2	3500	6320	
C 41 2_14.2	14.2	63	500	3.5	3500	5060	35	500	1.9	3500	6700	
C 41 2_15.8	15.8	57	500	3.1	3500	5370	32	500	1.7	3500	7000	
C 41 2_17.8	17.8	51	500	2.8	3500	5650	28.1	500	1.5	3500	7000	
C 41 2_19.8	19.8	45	500	2.5	3500	5970	25.3	500	1.4	3500	7000	
C 41 2_22.6	22.6	40	500	2.2	3500	6320	22.1	500	1.2	3500	7000	
C 41 2_25.0	25.0	36	500	2.0	3500	6670	20.0	500	1.1	3500	7000	
C 41 2_28.3	28.3	32	500	1.8	3500	7000	17.7	500	0.97	3500	7000	
C 41 2_31.4	31.4	28.7	500	1.6	3500	7000	15.9	500	0.88	3500	7000	
C 41 2_33.4	33.4	26.9	500	1.5	3500	7000	15.0	500	0.83	3500	7000	
C 41 2_37.1	37.1	24.3	500	1.3	3500	7000	13.5	500	0.74	3500	7000	
C 41 2_44.8	44.8	20.1	500	1.1	3500	7000	11.2	500	0.62	3500	7000	
C 41 3_28.5	28.5	32	600	2.1	3500	6530	17.5	600	1.2	3500	7000	
C 41 3_31.2	31.2	28.8	600	1.9	3500	6870	16.0	600	1.1	3500	7000	
C 41 3_36.8	36.8	24.5	600	1.7	3500	7000	13.6	600	0.92	3500	7000	
C 41 3_40.3	40.3	22.3	600	1.5	3500	7000	12.4	600	0.84	3500	7000	
C 41 3_47.0	47.0	19.1	600	1.3	3500	7000	10.6	600	0.72	3500	7000	
C 41 3_51.5	51.5	17.5	600	1.2	3500	7000	9.7	600	0.66	3500	7000	
C 41 3_58.7	58.7	15.3	600	1.0	3500	7000	8.5	600	0.58	3500	7000	145
C 41 3_64.3	64.3	14.0	600	0.95	3500	7000	7.8	600	0.53	3500	7000	
C 41 3_74.4	74.4	12.1	600	0.82	3500	7000	6.7	600	0.45	3500	7000	
C 41 3_81.5	81.5	11.0	600	0.75	3500	7000	6.1	600	0.41	3500	7000	
C 41 3_93.3	93.3	9.6	600	0.65	3500	7000	5.4	600	0.36	3500	7000	
C 41 3_102.3	102.3	8.8	600	0.59	3500	7000	4.9	600	0.33	3500	7000	
C 41 3_110.1	110.1	8.2	600	0.55	3500	7000	4.5	600	0.31	3500	7000	
C 41 3_120.6	120.6	7.5	600	0.50	3500	7000	4.1	600	0.28	3500	7000	
C 41 3_132.9	132.9	6.8	600	0.46	3500	7000	3.8	600	0.25	3500	7000	
C 41 3_145.6	145.6	6.2	600	0.42	3500	7000	3.4	600	0.23	3500	7000	
C 41 3_164.1	164.1	5.5	600	0.37	3500	7000	3.0	600	0.21	3500	7000	
C 41 3_179.9	179.9	5.0	600	0.34	3500	7000	2.8	600	0.19	3500	7000	
C 41 3_190.8	190.8	4.7	600	0.32	3500	7000	2.6	600	0.18	3500	7000	
C 41 3_209.1	209.1	4.3	600	0.29	3500	7000	2.4	600	0.16	3500	7000	
C 41 4_239.9	239.9	3.8	600	0.26	2200	7000	2.1	600	0.14	2200	7000	
C 41 4_263.0	263.0	3.4	600	0.24	2200	7000	1.9	600	0.13	2200	7000	
C 41 4_304.2	304.2	3.0	600	0.20	2200	7000	1.6	600	0.11	2200	7000	
C 41 4_333.4	333.4	2.7	600	0.19	2200	7000	1.5	600	0.10	2200	7000	
C 41 4_381.8	381.8	2.4	600	0.16	2200	7000	1.3	600	0.09	2200	7000	
C 41 4_418.5	418.5	2.2	600	0.15	2200	7000	1.2	600	0.08	2200	7000	
C 41 4_450.2	450.2	2.0	600	0.14	2200	7000	1.1	600	0.08	2200	7000	
C 41 4_493.5	493.5	1.8	600	0.13	2200	7000	1.0	600	0.07	2200	7000	
C 41 4_543.5	543.5	1.7	600	0.11	2200	7000	0.92	600	0.06	2200	7000	
C 41 4_595.8	595.8	1.5	600	0.10	2200	7000	0.84	600	0.06	2200	7000	
C 41 4_671.3	671.3	1.3	600	0.09	2200	7000	0.74	600	0.05	2200	7000	
C 41 4_735.9	735.9	1.2	600	0.08	2200	7000	0.68	600	0.05	2200	7000	
C 41 4_780.4	780.4	1.2	600	0.08	2200	7000	0.64	600	0.04	2200	7000	
C 41 4_855.5	855.5	1.1	600	0.07	2200	7000	0.58	600	0.04	2200	7000	

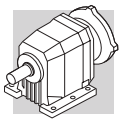

C 51 — 1000 Nm

	i	n_1 = 2800 min^{-1}					n_1 = 1400 min^{-1}					
		n_2 min^{-1}	M_{n2} Nm	P_{n1} kW	R_{n1} N	R_{n2} N	n_2 min^{-1}	M_{n2} Nm	P_{n1} kW	R_{n1} N	R_{n2} N	
C 51 2_2.6	2.6	1077	315	37	980	3340	538	400	24	1390	4200	149
C 51 2_3.3	3.3	848	340	32	1070	3610	424	420	19.6	1650	4580	
C 51 2_4.5	4.5	622	370	25	1170	4010	311	435	14.9	2010	5180	
C 51 2_5.6	5.6	500	390	21	1290	4380	250	435	12.0	2400	5760	
C 51 2_7.0	7.0	400	500	22	2270	4760	200	630	13.9	2860	6000	
C 51 2_7.8	7.8	359	510	20	2360	4940	179	640	12.7	2980	6230	
C 51 2_8.8	8.8	318	545	19.1	2300	5120	159	685	12.0	2900	6450	
C 51 2_9.8	9.8	286	545	17.2	2410	5350	143	685	10.8	3030	6750	
C 51 2_11.8	11.8	237	610	16.0	2310	5620	119	770	10.1	2910	7080	
C 51 2_13.1	13.1	214	595	14.0	2440	5930	107	750	8.8	3070	7470	
C 51 2_15.0	15.0	187	660	13.6	2330	6080	93	800	8.2	2980	7770	
C 51 2_16.6	16.6	169	640	11.9	2460	6420	84	795	7.4	3120	8130	
C 51 2_18.9	18.9	148	695	11.3	2330	6630	74	800	6.5	3050	8620	
C 51 2_21.0	21.0	133	675	9.9	2460	7000	67	795	5.8	3180	9020	
C 51 2_23.4	23.4	120	735	9.7	2320	7160	60	800	5.3	3110	9460	
C 51 2_25.9	25.9	108	715	8.5	2460	7550	54	795	4.7	3230	9890	
C 51 2_29.8	29.8	94	795	8.2	2310	7770	47	800	4.1	3180	10000	
C 51 2_33.0	33.0	85	775	7.2	2440	8190	42	795	3.7	3300	10000	
C 51 2_36.4	36.4	77	750	6.4	2390	8660	38	790	3.3	3220	10000	
C 51 2_40.4	40.4	69	795	6.1	2440	8870	35	795	3.0	3320	10000	
C 51 2_43.1	43.1	65	730	5.2	2450	9380	32	770	2.8	3280	10000	
C 51 2_47.8	47.8	59	800	5.2	2460	9530	29.3	800	2.6	3350	10000	
C 51 2_51.4	51.4	54	665	4.0	2550	10000	27.2	700	2.1	3390	10000	
C 51 2_57.0	57.0	49	745	4.0	2540	10000	24.6	785	2.1	3380	10000	
C 51 3_21.8	21.8	128	720	10.4	2870	6940	64	905	6.5	3500	8750	
C 51 3_23.9	23.9	117	730	9.6	2910	7230	59	920	6.1	3500	9110	
C 51 3_27.4	27.4	102	770	8.9	2890	7510	51	970	5.6	3500	9470	
C 51 3_30.1	30.1	93	780	8.2	2930	7830	47	1000	5.2	3500	9810	
C 51 3_37.0	37.0	76	840	7.2	2910	8330	38	1000	4.3	3500	10000	
C 51 3_40.5	40.5	69	855	6.7	2940	8670	35	1000	3.9	3500	10000	
C 51 3_46.7	46.7	60	905	6.1	2920	9020	30	1000	3.4	3500	10000	
C 51 3_51.2	51.2	55	920	5.7	2950	9390	27.3	1000	3.1	3500	10000	
C 51 3_59.0	59.0	47	970	5.2	2910	9780	23.7	1000	2.7	3500	10000	
C 51 3_64.6	64.6	43	1000	4.9	2940	10000	21.7	1000	2.4	3500	10000	
C 51 3_72.9	72.9	38	1000	4.3	2920	10000	19.2	1000	2.2	3500	10000	
C 51 3_79.9	79.9	35	1000	3.9	2960	10000	17.5	1000	2.0	3500	10000	
C 51 3_93.0	93.0	30	1000	3.4	2950	10000	15.1	1000	1.7	3500	10000	
C 51 3_101.8	101.8	27.5	1000	3.1	2990	10000	13.8	1000	1.5	3500	10000	
C 51 3_113.6	113.6	24.6	1000	2.8	2960	10000	12.3	1000	1.4	3500	10000	
C 51 3_124.4	124.4	22.5	1000	2.5	3000	10000	11.3	1000	1.3	3500	10000	
C 51 3_134.6	134.6	20.8	1000	2.3	2970	10000	10.4	1000	1.2	3500	10000	
C 51 3_147.4	147.4	19.0	1000	2.1	3010	10000	9.5	1000	1.1	3500	10000	
C 51 3_160.5	160.5	17.4	1000	2.0	2980	10000	8.7	1000	0.98	3500	10000	
C 51 3_175.8	175.8	15.9	1000	1.8	3020	10000	8.0	1000	0.90	3500	10000	
C 51 3_197.9	197.9	14.1	1000	1.6	2980	10000	7.1	1000	0.80	3500	10000	
C 51 3_216.7	216.7	12.9	1000	1.5	3020	10000	6.5	1000	0.73	3500	10000	
C 51 4_240.9	240.9	11.6	1000	1.3	2100	10000	5.8	1000	0.67	2200	10000	
C 51 4_263.8	263.8	10.6	1000	1.2	2120	10000	5.3	1000	0.61	2200	10000	
C 51 4_297.8	297.8	9.4	1000	1.1	2140	10000	4.7	1000	0.54	2200	10000	
C 51 4_326.1	326.1	8.6	1000	0.99	2160	10000	4.3	1000	0.49	2200	10000	
C 51 4_379.6	379.6	7.4	1000	0.85	2190	10000	3.7	1000	0.42	2200	10000	
C 51 4_415.7	415.7	6.7	1000	0.78	2200	10000	3.4	1000	0.39	2200	10000	
C 51 4_463.9	463.9	6.0	1000	0.69	2200	10000	3.0	1000	0.35	2200	10000	
C 51 4_508.0	508.0	5.5	1000	0.63	2200	10000	2.8	1000	0.32	2200	10000	
C 51 4_549.7	549.7	5.1	1000	0.59	2200	10000	2.5	1000	0.29	2200	10000	
C 51 4_602.0	602.0	4.7	1000	0.54	2200	10000	2.3	1000	0.27	2200	10000	
C 51 4_655.4	655.4	4.3	1000	0.49	2200	10000	2.1	1000	0.25	2200	10000	
C 51 4_717.7	717.7	3.9	1000	0.45	2200	10000	2.0	1000	0.22	2200	10000	
C 51 4_808.0	808.0	3.5	1000	0.40	2200	10000	1.7	1000	0.20	2200	10000	
C 51 4_884.9	884.9	3.2	1000	0.36	2200	10000	1.6	1000	0.18	2200	10000	

Bonfiglioli Riduttori

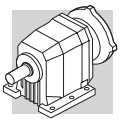

C 51 — 1000 Nm

	i	n_1 = 900 min^{-1}					n_1 = 500 min^{-1}					
		n_2 min^{-1}	M_{n2} Nm	P_{n1} kW	R_{n1} N	R_{n2} N	n_2 min^{-1}	M_{n2} Nm	P_{n1} kW	R_{n1} N	R_{n2} N	
C 51 2_2.6	2.6	346	400	15.3	2560	5130	192	400	8.5	3500	6620	
C 51 2_3.3	3.3	273	420	12.6	2710	5590	152	420	7.0	3500	7200	
C 51 2_4.5	4.5	200	435	9.6	2900	6300	111	435	5.3	3500	8070	
C 51 2_5.6	5.6	161	435	7.7	3080	6970	89	435	4.3	3500	8880	
C 51 2_7.0	7.0	129	730	10.3	3310	6950	71	800	6.3	3500	8760	
C 51 2_7.8	7.8	115	740	9.4	3460	7220	64	800	5.7	3500	9140	
C 51 2_8.8	8.8	102	795	9.0	3360	7470	57	800	5.0	3500	9680	
C 51 2_9.8	9.8	92	800	8.1	3500	7790	51	800	4.5	3500	10000	
C 51 2_11.8	11.8	76	800	6.7	3500	8530	42	800	3.7	3500	10000	
C 51 2_13.1	13.1	69	800	6.1	3500	8900	38	800	3.4	3500	10000	
C 51 2_15.0	15.0	60	800	5.3	3500	9450	33	800	2.9	3500	10000	
C 51 2_16.6	16.6	54	800	4.8	3500	9850	30	800	2.7	3500	10000	
C 51 2_18.9	18.9	48	800	4.2	3500	10000	26.5	800	2.3	3500	10000	
C 51 2_21.0	21.0	43	800	3.8	3500	10000	23.8	800	2.1	3500	10000	
C 51 2_23.4	23.4	38	800	3.4	3500	10000	21.4	800	1.9	3500	10000	
C 51 2_25.9	25.9	35	800	3.1	3500	10000	19.3	800	1.7	3500	10000	
C 51 2_29.8	29.8	30	800	2.7	3500	10000	16.8	800	1.5	3500	10000	
C 51 2_33.0	33.0	27.3	800	2.4	3500	10000	15.2	800	1.3	3500	10000	
C 51 2_36.4	36.4	24.7	800	2.2	3500	10000	13.7	800	1.2	3500	10000	
C 51 2_40.4	40.4	22.3	800	2.0	3500	10000	12.4	800	1.1	3500	10000	
C 51 2_43.1	43.1	20.9	800	1.8	3500	10000	11.6	800	1.0	3500	10000	
C 51 2_47.8	47.8	18.8	800	1.7	3500	10000	10.5	800	0.92	3500	10000	
C 51 2_51.4	51.4	17.5	725	1.4	3500	10000	9.7	755	0.81	3500	10000	
C 51 2_57.0	57.0	15.8	795	1.4	3500	10000	8.8	795	0.77	3500	10000	
C 51 3_21.8	21.8	41	1000	4.6	3500	10000	22.9	1000	2.6	3500	10000	
C 51 3_23.9	23.9	38	1000	4.2	3500	10000	20.9	1000	2.4	3500	10000	
C 51 3_27.4	27.4	33	1000	3.7	3500	10000	18.2	1000	2.1	3500	10000	
C 51 3_30.1	30.1	29.9	1000	3.4	3500	10000	16.6	1000	1.9	3500	10000	
C 51 3_37.0	37.0	24.3	1000	2.7	3500	10000	13.5	1000	1.5	3500	10000	
C 51 3_40.5	40.5	22.2	1000	2.5	3500	10000	12.3	1000	1.4	3500	10000	149
C 51 3_46.7	46.7	19.3	1000	2.2	3500	10000	10.7	1000	1.2	3500	10000	
C 51 3_51.2	51.2	17.6	1000	2.0	3500	10000	9.8	1000	1.1	3500	10000	
C 51 3_59.0	59.0	15.3	1000	1.7	3500	10000	8.5	1000	0.95	3500	10000	
C 51 3_64.6	64.6	13.9	1000	1.6	3500	10000	7.7	1000	0.87	3500	10000	
C 51 3_72.9	72.9	12.3	1000	1.4	3500	10000	6.9	1000	0.77	3500	10000	
C 51 3_79.9	79.9	11.3	1000	1.3	3500	10000	6.3	1000	0.70	3500	10000	
C 51 3_93.0	93.0	9.7	1000	1.1	3500	10000	5.4	1000	0.61	3500	10000	
C 51 3_101.8	101.8	8.8	1000	1.0	3500	10000	4.9	1000	0.55	3500	10000	
C 51 3_113.6	113.6	7.9	1000	0.89	3500	10000	4.4	1000	0.50	3500	10000	
C 51 3_124.4	124.4	7.2	1000	0.81	3500	10000	4.0	1000	0.45	3500	10000	
C 51 3_134.6	134.6	6.7	1000	0.75	3500	10000	3.7	1000	0.42	3500	10000	
C 51 3_147.4	147.4	6.1	1000	0.69	3500	10000	3.4	1000	0.38	3500	10000	
C 51 3_160.5	160.5	5.6	1000	0.63	3500	10000	3.1	1000	0.35	3500	10000	
C 51 3_175.8	175.8	5.1	1000	0.58	3500	10000	2.8	1000	0.32	3500	10000	
C 51 3_197.9	197.9	4.5	1000	0.51	3500	10000	2.5	1000	0.28	3500	10000	
C 51 3_216.7	216.7	4.2	1000	0.47	3500	10000	2.3	1000	0.26	3500	10000	
C 51 4_240.9	240.9	3.7	1000	0.43	2200	10000	2.1	1000	0.24	2200	10000	
C 51 4_263.8	263.8	3.4	1000	0.39	2200	10000	1.9	1000	0.22	2200	10000	
C 51 4_297.8	297.8	3.0	1000	0.35	2200	10000	1.7	1000	0.19	2200	10000	
C 51 4_326.1	326.1	2.8	1000	0.32	2200	10000	1.5	1000	0.18	2200	10000	
C 51 4_379.6	379.6	2.4	1000	0.27	2200	10000	1.3	1000	0.15	2200	10000	
C 51 4_415.7	415.7	2.2	1000	0.25	2200	10000	1.2	1000	0.14	2200	10000	
C 51 4_463.9	463.9	1.9	1000	0.22	2200	10000	1.1	1000	0.12	2200	10000	
C 51 4_508.0	508.0	1.8	1000	0.20	2200	10000	1.0	1000	0.11	2200	10000	
C 51 4_549.7	549.7	1.6	1000	0.19	2200	10000	0.91	1000	0.10	2200	10000	
C 51 4_602.0	602.0	1.5	1000	0.17	2200	10000	0.83	1000	0.10	2200	10000	
C 51 4_655.4	655.4	1.4	1000	0.16	2200	10000	0.76	1000	0.09	2200	10000	
C 51 4_717.7	717.7	1.3	1000	0.14	2200	10000	0.70	1000	0.08	2200	10000	
C 51 4_808.0	808.0	1.1	1000	0.13	2200	10000	0.62	1000	0.07	2200	10000	
C 51 4_884.9	884.9	1.0	1000	0.12	2200	10000	0.57	1000	0.07	2200	10000	

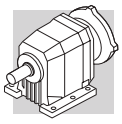

C 61 — 1600 Nm

	i	n_1 = 2800 min^{-1}					n_1 = 1400 min^{-1}					
		n_2 min^{-1}	M_{n2} Nm	P_{n1} kW	R_{n1} N	R_{n2} N	n_2 min^{-1}	M_{n2} Nm	P_{n1} kW	R_{n1} N	R_{n2} N	
C 61 2_2.8	2.8	1000	445	49	—	4670	500	550	30	770	5930	153
C 61 2_3.7	3.7	757	530	44	—	4950	378	575	24	1730	6600	
C 61 2_4.6	4.6	609	575	39	—	5280	304	600	20	2150	7130	
C 61 2_6.0	6.0	467	575	30	—	6000	233	625	16.1	2700	7950	
C 61 2_6.7	6.7	418	900	41	2230	5600	209	1130	26	2850	7060	
C 61 2_7.5	7.5	373	1000	41	2220	5620	187	1250	26	2900	7110	
C 61 2_8.8	8.8	318	1000	35	2290	6080	159	1250	22	2980	7690	
C 61 2_9.8	9.8	286	1100	35	2380	6140	143	1350	21	3330	7850	
C 61 2_10.9	10.9	257	1050	30	2530	6590	128	1350	19.1	2940	8210	
C 61 2_12.1	12.1	231	1150	29	2670	6670	116	1350	17.2	3600	8730	
C 61 2_14.3	14.3	196	1150	25	2450	7220	98	1350	14.6	3590	9430	
C 61 2_15.9	15.9	176	1250	24	2660	7350	88	1350	13.1	3780	9990	
C 61 2_17.7	17.7	158	1200	21	2540	7850	79	1350	11.8	3700	10400	
C 61 2_19.6	19.6	143	1300	20	2780	8000	71	1350	10.6	3890	11000	
C 61 2_22.4	22.4	125	1250	17.2	2630	8650	63	1350	9.3	3810	11600	
C 61 2_24.8	24.8	113	1350	16.8	2840	8840	56	1350	8.4	3980	12300	
C 61 2_27.4	27.4	102	1300	14.6	2600	9390	51	1350	7.6	3880	12800	
C 61 2_30.4	30.4	92	1350	13.7	2900	9770	46	1350	6.9	4050	13500	
C 61 2_34.2	34.2	82	1165	10.5	3020	10900	41	1225	5.5	4090	14500	
C 61 2_38.0	38.0	74	1280	10.4	3030	11100	37	1350	5.5	4100	14800	
C 61 3_26.8	26.8	104	1140	13.4	3740	9810	52	1435	8.4	4700	12400	
C 61 3_29.4	29.4	95	1160	12.4	3780	10200	48	1465	7.9	4700	12900	
C 61 3_33.0	33.0	85	1210	11.6	3750	10600	42	1525	7.3	4700	13300	
C 61 3_36.1	36.1	78	1235	10.8	3800	11000	39	1555	6.8	4700	13800	
C 61 3_43.4	43.4	65	1315	9.6	3760	11600	32	1600	5.8	4700	14800	
C 61 3_47.6	47.6	59	1340	8.9	3810	12100	29.4	1600	5.3	4700	15500	
C 61 3_53.5	53.5	52	1400	8.2	3760	12500	26.2	1600	4.7	4700	16000	
C 61 3_58.6	58.6	48	1430	7.7	3810	13000	23.9	1600	4.3	4700	16000	
C 61 3_67.7	67.7	41	1505	7.0	3750	13500	20.7	1600	3.7	4700	16000	
C 61 3_74.2	74.2	38	1535	6.5	3800	14100	18.9	1600	3.4	4700	16000	
C 61 3_83.0	83.0	34	1600	6.1	3740	14500	16.9	1600	3.0	4700	16000	
C 61 3_91.0	91.0	31	1600	5.5	3800	15200	15.4	1600	2.8	4700	16000	
C 61 3_103.6	103.6	27.0	1600	4.9	3760	16000	13.5	1600	2.4	4700	16000	
C 61 3_113.6	113.6	24.6	1600	4.4	3820	16000	12.3	1600	2.2	4700	16000	
C 61 3_128.1	128.1	21.9	1600	3.9	3790	16000	10.9	1600	2.0	4700	16000	
C 61 3_140.5	140.5	19.9	1600	3.6	3840	16000	10.0	1600	1.8	4700	16000	
C 61 3_150.0	150.0	18.7	1600	3.4	3800	16000	9.3	1600	1.7	4700	16000	
C 61 3_164.5	164.5	17.0	1600	3.1	3850	16000	8.5	1600	1.5	4700	16000	
C 61 3_178.6	178.6	15.7	1600	2.8	3800	16000	7.8	1600	1.4	4700	16000	
C 61 3_195.8	195.8	14.3	1600	2.6	3860	16000	7.2	1600	1.3	4700	16000	
C 61 4_217.4	217.4	12.9	1600	2.4	3020	16000	6.4	1600	1.2	3500	16000	
C 61 4_238.3	238.3	11.7	1600	2.2	3060	16000	5.9	1600	1.1	3500	16000	
C 61 4_275.3	275.3	10.2	1600	1.9	3100	16000	5.1	1600	0.94	3500	16000	
C 61 4_301.7	301.7	9.3	1600	1.7	3130	16000	4.6	1600	0.85	3500	16000	
C 61 4_337.7	337.7	8.3	1600	1.5	3160	16000	4.1	1600	0.76	3500	16000	
C 61 4_370.1	370.1	7.6	1600	1.4	3180	16000	3.8	1600	0.70	3500	16000	
C 61 4_421.5	421.5	6.6	1600	1.2	3200	16000	3.3	1600	0.61	3500	16000	
C 61 4_462.0	462.0	6.1	1600	1.1	3220	16000	3.0	1600	0.56	3500	16000	
C 61 4_521.1	521.1	5.4	1600	0.99	3240	16000	2.7	1600	0.49	3500	16000	
C 61 4_571.2	571.2	4.9	1600	0.90	3250	16000	2.5	1600	0.45	3500	16000	
C 61 4_610.1	610.1	4.6	1600	0.84	3260	16000	2.3	1600	0.42	3500	16000	
C 61 4_668.8	668.8	4.2	1600	0.77	3280	16000	2.1	1600	0.39	3500	16000	
C 61 4_726.3	726.3	3.9	1600	0.71	3290	16000	1.9	1600	0.35	3500	16000	
C 61 4_796.1	796.1	3.5	1600	0.65	3300	16000	1.8	1600	0.32	3500	16000	

(—) Contact our technical service department advising radial load data (rotation direction, orientation, position)

Bonfiglioli Riduttori

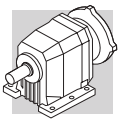

C 61 — 1600 Nm

	i	n_1 = 900 min^{-1}					n_1 = 500 min^{-1}					
		n_2 min^{-1}	M_{n2} Nm	P_{n1} kW	R_{n1} N	R_{n2} N	n_2 min^{-1}	M_{n2} Nm	P_{n1} kW	R_{n1} N	R_{n2} N	
C 61 2_2.8	2.8	321	565	20	2840	7150	179	665	13.1	4050	8790	153
C 61 2_3.7	3.7	243	625	16.8	3000	7800	135	665	9.9	4700	9860	
C 61 2_4.6	4.6	196	665	14.3	3170	8380	109	665	8.0	4700	10760	
C 61 2_6.0	6.0	150	665	11.0	4120	9440	83	665	6.1	4700	12000	
C 61 2_6.7	6.7	134	1350	20	2850	8050	75	1350	11.1	4700	10800	
C 61 2_7.5	7.5	120	1350	17.9	4010	8560	67	1350	9.9	4700	11400	
C 61 2_8.8	8.8	102	1350	15.2	4070	9240	57	1350	8.5	4700	12200	
C 61 2_9.8	9.8	92	1350	13.7	4310	9790	51	1350	7.6	4700	12900	
C 61 2_10.9	10.9	83	1350	12.3	4270	10200	46	1350	6.8	4700	13400	
C 61 2_12.1	12.1	74	1350	11.1	4480	10800	41	1350	6.1	4700	14100	
C 61 2_14.3	14.3	63	1350	9.4	4470	11600	35	1350	5.2	4700	15100	
C 61 2_15.9	15.9	57	1350	8.4	4660	12300	31	1350	4.7	4700	15900	
C 61 2_17.7	17.7	51	1350	7.6	4580	12800	28.2	1350	4.2	4700	16000	
C 61 2_19.6	19.6	46	1350	6.8	4700	13500	25.5	1350	3.8	4700	16000	
C 61 2_22.4	22.4	40	1350	6.0	4690	14200	22.3	1350	3.3	4700	16000	
C 61 2_24.8	24.8	36	1350	5.4	4700	14900	20.2	1350	3.0	4700	16000	
C 61 2_27.4	27.4	33	1350	4.9	4700	15500	18.2	1350	2.7	4700	16000	
C 61 2_30.4	30.4	29.6	1350	4.4	4700	16000	16.4	1350	2.4	4700	16000	
C 61 2_34.2	34.2	26.3	1265	3.7	4700	16000	14.6	1325	2.1	4700	16000	
C 61 2_38.0	38.0	23.7	1350	3.5	4700	16000	13.2	1350	2.0	4700	16000	
C 61 3_26.8	26.8	34	1600	6.0	4700	14500	18.7	1600	3.4	4700	16000	
C 61 3_29.4	29.4	31	1600	5.5	4700	15200	17.0	1600	3.1	4700	16000	
C 61 3_33.0	33.0	27.3	1600	4.9	4700	15900	15.2	1600	2.7	4700	16000	
C 61 3_36.1	36.1	24.9	1600	4.5	4700	16000	13.9	1600	2.5	4700	16000	
C 61 3_43.4	43.4	20.7	1600	3.7	4700	16000	11.5	1600	2.1	4700	16000	
C 61 3_47.6	47.6	18.9	1600	3.4	4700	16000	10.5	1600	1.9	4700	16000	
C 61 3_53.5	53.5	16.8	1600	3.0	4700	16000	9.3	1600	1.7	4700	16000	
C 61 3_58.6	58.6	15.4	1600	2.8	4700	16000	8.5	1600	1.5	4700	16000	
C 61 3_67.7	67.7	13.3	1600	2.4	4700	16000	7.4	1600	1.3	4700	16000	
C 61 3_74.2	74.2	12.1	1600	2.2	4700	16000	6.7	1600	1.2	4700	16000	
C 61 3_83.0	83.0	10.8	1600	2.0	4700	16000	6.0	1600	1.1	4700	16000	
C 61 3_91.0	91.0	9.9	1600	1.8	4700	16000	5.5	1600	0.99	4700	16000	
C 61 3_103.6	103.6	8.7	1600	1.6	4700	16000	4.8	1600	0.87	4700	16000	
C 61 3_113.6	113.6	7.9	1600	1.4	4700	16000	4.4	1600	0.79	4700	16000	
C 61 3_128.1	128.1	7.0	1600	1.3	4700	16000	3.9	1600	0.70	4700	16000	
C 61 3_140.5	140.5	6.4	1600	1.2	4700	16000	3.6	1600	0.64	4700	16000	
C 61 3_150.0	150.0	6.0	1600	1.1	4700	16000	3.3	1600	0.60	4700	16000	
C 61 3_164.5	164.5	5.5	1600	0.99	4700	16000	3.0	1600	0.55	4700	16000	
C 61 3_178.6	178.6	5.0	1600	0.91	4700	16000	2.8	1600	0.50	4700	16000	
C 61 3_195.8	195.8	4.6	1600	0.83	4700	16000	2.6	1600	0.46	4700	16000	
C 61 4_217.4	217.4	4.1	1600	0.76	3500	16000	2.3	1600	0.42	3500	16000	
C 61 4_238.3	238.3	3.8	1600	0.70	3500	16000	2.1	1600	0.39	3500	16000	
C 61 4_275.3	275.3	3.3	1600	0.60	3500	16000	1.8	1600	0.33	3500	16000	
C 61 4_301.7	301.7	3.0	1600	0.55	3500	16000	1.7	1600	0.31	3500	16000	
C 61 4_337.7	337.7	2.7	1600	0.49	3500	16000	1.5	1600	0.27	3500	16000	
C 61 4_370.1	370.1	2.4	1600	0.45	3500	16000	1.4	1600	0.25	3500	16000	
C 61 4_421.5	421.5	2.1	1600	0.39	3500	16000	1.2	1600	0.22	3500	16000	
C 61 4_462.0	462.0	1.9	1600	0.36	3500	16000	1.1	1600	0.20	3500	16000	
C 61 4_521.1	521.1	1.7	1600	0.32	3500	16000	1.0	1600	0.18	3500	16000	
C 61 4_571.2	571.2	1.6	1600	0.29	3500	16000	0.88	1600	0.16	3500	16000	
C 61 4_610.1	610.1	1.5	1600	0.27	3500	16000	0.82	1600	0.15	3500	16000	
C 61 4_668.8	668.8	1.3	1600	0.25	3500	16000	0.75	1600	0.14	3500	16000	
C 61 4_726.3	726.3	1.2	1600	0.23	3500	16000	0.69	1600	0.13	3500	16000	
C 61 4_796.1	796.1	1.1	1600	0.21	3500	16000	0.63	1600	0.12	3500	16000	

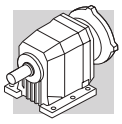

C 70 — 2300 Nm

	i	n_1 = 2800 min^{-1}					n_1 = 1400 min^{-1}					
		n_2 min^{-1}	M_{n2} Nm	P_{n1} kW	R_{n1} N	R_{n2} N	n_2 min^{-1}	M_{n2} Nm	P_{n1} kW	R_{n1} N	R_{n2} N	
C 70 2_4.6	4.6	613	1400	95	—	5590	306	1700	57	—	7100	156
C 70 2_5.9	5.9	479	1550	82	—	5610	239	1900	50	—	6990	
C 70 2_6.3	6.3	448	1600	79	1980	6570	224	1950	48	2630	8250	
C 70 2_7.5	7.5	375	1550	64	—	7130	188	1950	40	—	8400	
C 70 2_8.0	8.0	350	1750	68	1760	6840	175	2100	41	2670	8880	
C 70 2_9.5	9.5	294	1600	52	770	8260	147	2000	32	620	9910	
C 70 2_10.2	10.2	274	1900	57	2000	7200	137	2100	32	4470	10800	
C 70 2_11.2	11.2	250	1600	44	1130	9350	125	2000	28	1070	11300	
C 70 2_13.0	13.0	215	2050	49	1860	7700	107	2100	25	5600	12900	
C 70 2_14.1	14.1	199	1700	37	1100	10100	99	2100	23	1280	12400	
C 70 2_15.3	15.3	183	2100	42	1810	8540	91	2100	21	5860	14300	
C 70 2_16.7	16.7	168	1700	31	1570	11400	84	2050	18.9	2350	14300	
C 70 2_19.3	19.3	145	2100	34	2730	10400	73	2100	16.8	6000	16300	
C 70 2_22.9	22.9	123	2100	28	3160	11800	61	2100	14.2	6060	18000	
C 70 2_27.7	27.7	101	2100	23	3570	13400	51	2100	11.7	6120	19900	
C 70 2_34.7	34.7	81	2100	18.7	3960	15400	40	2100	9.3	6180	22200	
C 70 3_41.3	41.3	68	1900	14.5	5670	18400	34	2300	8.8	7000	22800	
C 70 3_44.7	44.7	63	1900	13.4	5700	19100	31	2300	8.1	7000	23800	
C 70 3_52.2	52.2	54	2050	12.4	5680	19600	26.8	2300	7.0	7000	25000	
C 70 3_56.5	56.5	50	2050	11.4	5710	20400	24.8	2300	6.4	7000	25000	
C 70 3_65.9	65.9	43	2200	10.5	5670	21000	21.3	2300	5.5	7000	25000	
C 70 3_71.3	71.3	39	2200	9.7	5710	21900	19.6	2300	5.1	7000	25000	
C 70 3_81.4	81.4	34	2300	8.9	5680	22700	17.2	2300	4.5	7000	25000	
C 70 3_88.2	88.2	32	2300	8.2	5710	23600	15.9	2300	4.1	7000	25000	
C 70 3_103.8	103.8	27.0	2300	7.0	5700	25000	13.5	2300	3.5	7000	25000	
C 70 3_112.4	112.4	24.9	2300	6.4	5740	25000	12.5	2300	3.2	7000	25000	
C 70 3_126.8	126.8	22.1	2300	5.7	5720	25000	11.0	2300	2.9	7000	25000	
C 70 3_137.4	137.4	20.4	2300	5.3	5750	25000	10.2	2300	2.6	7000	25000	
C 70 3_150.3	150.3	18.6	2300	4.8	5730	25000	9.3	2300	2.4	7000	25000	
C 70 3_162.8	162.8	17.2	2300	4.5	5760	25000	8.6	2300	2.2	7000	25000	
C 70 3_179.2	179.2	15.6	2300	4.0	5740	25000	7.8	2300	2.0	7000	25000	
C 70 3_194.1	194.1	14.4	2300	3.7	5770	25000	7.2	2300	1.9	7000	25000	
C 70 3_220.9	220.9	12.7	2250	3.2	5750	25000	6.3	2250	1.6	7000	25000	
C 70 3_239.3	239.3	11.7	2300	3.0	5770	25000	5.8	2300	1.5	7000	25000	
C 70 4_251.3	251.3	11.1	2300	2.9	2000	25000	5.6	2300	1.5	2620	25000	
C 70 4_272.2	272.2	10.3	2300	2.7	2030	25000	5.1	2300	1.4	2650	25000	
C 70 4_317.9	317.9	8.8	2300	2.3	2030	25000	4.4	2300	1.2	2650	25000	
C 70 4_344.3	344.3	8.1	2300	2.2	2050	25000	4.1	2300	1.1	2670	25000	
C 70 4_409.4	409.4	6.8	2300	1.8	2050	25000	3.4	2300	0.90	2670	25000	
C 70 4_443.5	443.5	6.3	2300	1.7	2070	25000	3.2	2300	0.80	2700	25000	
C 70 4_512.0	512.0	5.5	2300	1.4	2070	25000	2.7	2300	0.70	2680	25000	
C 70 4_554.7	554.7	5.0	2300	1.3	2090	25000	2.5	2300	0.70	2710	25000	
C 70 4_606.8	606.8	4.6	2300	1.2	2080	25000	2.3	2300	0.60	2700	25000	
C 70 4_657.3	657.3	4.3	2300	1.1	2100	25000	2.1	2300	0.60	2720	25000	
C 70 4_736.0	736.0	3.8	2300	1.0	2090	25000	1.9	2300	0.50	2700	25000	
C 70 4_797.3	797.3	3.5	2300	0.90	2110	25000	1.8	2300	0.50	2720	25000	
C 70 4_922.6	922.6	3.0	2300	0.80	2100	25000	1.5	2300	0.40	2710	25000	
C 70 4_999.5	999.5	2.8	2300	0.70	2110	25000	1.4	2300	0.40	2730	25000	
C 70 4_1069	1069	2.6	2300	0.70	2100	25000	1.3	2300	0.30	2720	25000	
C 70 4_1158	1158	2.4	2300	0.60	2100	25000	1.2	2300	0.30	2800	25000	
C 70 4_1362	1362	2.1	2300	0.50	2100	25000	1.0	2300	0.30	2800	25000	
C 70 4_1476	1476	1.9	2300	0.50	2100	25000	0.90	2300	0.30	2800	25000	

(—) Contact our technical service department advising radial load data (rotation direction, orientation, position)

Bonfiglioli Riduttori

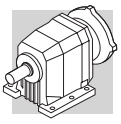

C 70 — 2300 Nm

	i	n_1 = 900 min^{-1}					n_1 = 500 min^{-1}					
		n_2 min^{-1}	M_{n2} Nm	P_{n1} kW	R_{n1} N	R_{n2} N	n_2 min^{-1}	M_{n2} Nm	P_{n1} kW	R_{n1} N	R_{n2} N	
C 70 2_4.6	4.6	197	1800	39	650	9360	109	1800	22	5500	13900	156
C 70 2_5.9	5.9	154	1950	33	560	9980	85	2150	20	2890	13400	
C 70 2_6.3	6.3	144	2100	33	4260	10400	80	2100	18.5	7000	15500	
C 70 2_7.5	7.5	121	2100	28	1120	10800	67	2150	15.9	5400	15600	
C 70 2_8.0	8.0	113	2100	26	5800	12500	63	2100	14.5	7000	17800	
C 70 2_9.5	9.5	95	2150	22	2140	12400	53	2150	12.4	6990	18100	
C 70 2_10.2	10.2	88	2100	20	6870	14600	49	2100	11.3	7000	20200	
C 70 2_11.2	11.2	80	2150	19.0	2620	14000	45	2150	10.6	7000	19800	
C 70 2_13.0	13.0	69	2100	16.0	7000	16900	38	2100	8.9	7000	22800	
C 70 2_14.1	14.1	64	2150	15.1	3900	16000	35	2150	8.4	7000	22300	
C 70 2_15.3	15.3	59	2100	13.6	7000	18400	33	2100	7.5	7000	24600	
C 70 2_16.7	16.7	54	2050	12.2	5470	18500	29.9	2050	6.8	7000	25000	
C 70 2_19.3	19.3	47	2100	10.8	7000	20700	25.9	2100	6.0	7000	25000	
C 70 2_22.9	22.9	39	2100	9.1	7000	22500	21.9	2100	5.1	7000	25000	
C 70 2_27.7	27.7	32	2100	7.5	7000	24600	18.0	2100	4.2	7000	25000	
C 70 2_34.7	34.7	25.9	2100	6.0	7000	25000	14.4	2100	3.3	7000	25000	
C 70 3_41.3	41.3	21.8	2300	5.6	7000	25000	12.1	2300	3.1	7000	25000	
C 70 3_44.7	44.7	20.1	2300	5.2	7000	25000	11.2	2300	2.9	7000	25000	
C 70 3_52.2	52.2	17.3	2300	4.5	7000	25000	9.6	2300	2.5	7000	25000	
C 70 3_56.5	56.5	15.9	2300	4.1	7000	25000	8.8	2300	2.3	7000	25000	
C 70 3_65.9	65.9	13.7	2300	3.5	7000	25000	7.6	2300	2.0	7000	25000	
C 70 3_71.3	71.3	12.6	2300	3.3	7000	25000	7.0	2300	1.8	7000	25000	
C 70 3_81.4	81.4	11.1	2300	2.9	7000	25000	6.1	2300	1.6	7000	25000	
C 70 3_88.2	88.2	10.2	2300	2.6	7000	25000	5.7	2300	1.5	7000	25000	
C 70 3_103.8	103.8	8.7	2300	2.2	7000	25000	4.8	2300	1.2	7000	25000	
C 70 3_112.4	112.4	8.0	2300	2.1	7000	25000	4.4	2300	1.2	7000	25000	
C 70 3_126.8	126.8	7.1	2300	1.8	7000	25000	3.9	2300	1.0	7000	25000	
C 70 3_137.4	137.4	6.6	2300	1.7	7000	25000	3.6	2300	0.90	7000	25000	
C 70 3_150.3	150.3	6.0	2300	1.6	7000	25000	3.3	2300	0.90	7000	25000	
C 70 3_162.8	162.8	5.5	2300	1.4	7000	25000	3.1	2300	0.80	7000	25000	
C 70 3_179.2	179.2	5.0	2300	1.3	7000	25000	2.8	2300	0.70	7000	25000	
C 70 3_194.1	194.1	4.6	2300	1.2	7000	25000	2.6	2300	0.70	7000	25000	
C 70 3_220.9	220.9	4.1	2250	1.0	7000	25000	2.3	2250	0.60	7000	25000	
C 70 3_239.3	239.3	3.8	2300	1.0	7000	25000	2.1	2300	0.50	7000	25000	
C 70 4_251.3	251.3	3.6	2300	0.90	2000	25000	2.0	2300	0.50	2620	25000	
C 70 4_272.2	272.2	3.3	2300	0.90	2030	25000	1.8	2300	0.50	2650	25000	
C 70 4_317.9	317.9	2.8	2300	0.70	2030	25000	1.6	2300	0.40	2650	25000	
C 70 4_344.3	344.3	2.6	2300	0.70	2050	25000	1.5	2300	0.40	2670	25000	
C 70 4_409.4	409.4	2.2	2300	0.60	2050	25000	1.2	2300	0.30	2670	25000	
C 70 4_443.5	443.5	2.0	2300	0.50	2070	25000	1.1	2300	0.30	2700	25000	
C 70 4_512.0	512.0	1.8	2300	0.50	2070	25000	1.0	2300	0.30	2680	25000	
C 70 4_554.7	554.7	1.6	2300	0.40	2090	25000	0.90	2300	0.20	2710	25000	
C 70 4_606.8	606.8	1.5	2300	0.40	2080	25000	0.80	2300	0.20	2700	25000	
C 70 4_657.3	657.3	1.4	2300	0.40	2100	25000	0.80	2300	0.20	2720	25000	
C 70 4_736.0	736.0	1.2	2300	0.30	2090	25000	0.70	2300	0.20	2700	25000	
C 70 4_797.3	797.3	1.1	2300	0.30	2110	25000	0.60	2300	0.20	2720	25000	
C 70 4_922.6	922.6	1.0	2300	0.30	2100	25000	0.50	2300	0.10	2710	25000	
C 70 4_999.5	999.5	0.90	2300	0.20	2110	25000	0.50	2300	0.10	2730	25000	
C 70 4_1069	1069	0.80	2300	0.20	2100	25000	0.50	2300	0.10	2720	25000	
C 70 4_1158	1158	0.80	2300	0.20	2100	25000	0.40	2300	0.10	2800	25000	
C 70 4_1362	1362	0.70	2300	0.20	2100	25000	0.40	2300	0.10	2800	25000	
C 70 4_1476	1476	0.60	2300	0.20	2100	25000	0.30	2300	0.10	2800	25000	

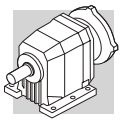

C 80 — 4000 Nm

	i	n_1 = 2800 min^{-1}					n_1 = 1400 min^{-1}					
		n_2 min^{-1}	M_{n2} Nm	P_{n1} kW	R_{n1} N	R_{n2} N	n_2 min^{-1}	M_{n2} Nm	P_{n1} kW	R_{n1} N	R_{n2} N	
C 80 2_5.6	5.6	496	2400	131	370	10900	248	3100	85	690	12300	159
C 80 2_6.1	6.1	458	2450	124	890	11000	229	3150	80	1380	12700	
C 80 2_7.0	7.0	398	2650	116	350	11000	199	3350	73	910	12900	
C 80 2_7.6	7.6	367	2700	109	890	11300	183	3400	69	1600	13300	
C 80 2_8.9	8.9	316	2800	98	420	12100	158	3500	61	1120	14500	
C 80 2_9.6	9.6	292	3000	96	520	11300	146	3700	59	1380	13900	
C 80 2_11.1	11.1	252	2800	78	1110	14200	126	3500	49	1950	17100	
C 80 2_12.0	12.0	233	3000	77	1200	13500	116	3700	48	2190	16600	
C 80 2_13.8	13.8	203	2800	63	1420	16400	102	3500	39	2330	19800	
C 80 2_14.9	14.9	188	3000	62	1510	15800	94	3700	38	2560	19300	
C 80 2_16.7	16.7	168	2800	52	1840	18500	84	3500	32	2840	22300	
C 80 2_18.1	18.1	155	3000	50	1930	17900	78	3700	32	3060	22000	
C 80 2_20.5	20.5	136	2850	43	2000	20500	68	3550	27	3060	24800	
C 80 2_22.2	22.2	126	3000	42	2210	20300	63	3700	26	3400	24900	
C 80 2_24.0	24.0	117	2850	37	2090	22400	58	3550	23	3180	27000	
C 80 2_25.9	25.9	108	3000	36	2300	22300	54	3700	22	3510	27200	
C 80 2_31.3	31.3	89	3000	30	2480	24700	45	3700	18.2	3730	30000	
C 80 2_39.1	39.1	72	2500	19.7	3820	31000	36	3200	12.6	5060	35000	
C 80 3_43.5	43.5	64	3100	23	5610	28700	32	3800	13.8	7000	34800	
C 80 3_47.4	47.4	59	3100	21	5660	30000	29.5	3800	12.6	7000	35000	
C 80 3_57.3	57.3	49	3400	18.7	5620	30500	24.4	4000	11.0	7000	35000	
C 80 3_62.5	62.5	45	3400	17.1	5670	31800	22.4	4000	10.1	7000	35000	
C 80 3_70.5	70.5	40	3650	16.3	5620	32200	19.9	4000	8.9	7000	35000	
C 80 3_76.9	76.9	36	3600	14.8	5670	33900	18.2	4000	8.2	7000	35000	
C 80 3_89.3	89.3	31	3900	13.8	5620	34700	15.7	4000	7.1	7000	35000	
C 80 3_97.4	97.4	28.7	3900	12.6	5670	35000	14.4	4000	6.5	7000	35000	
C 80 3_109.5	109.5	25.5	4000	11.5	5630	35000	12.8	4000	5.8	7000	35000	
C 80 3_119.5	119.5	23.4	4000	10.6	5680	35000	11.7	4000	5.3	7000	35000	
C 80 3_136.7	136.7	20.5	4000	9.2	5660	35000	10.2	4000	4.6	7000	35000	
C 80 3_149.1	149.1	18.8	4000	8.5	5700	35000	9.4	4000	4.2	7000	35000	
C 80 3_169.0	169.0	16.6	4000	7.5	5680	35000	8.3	4000	3.7	7000	35000	
C 80 3_184.4	184.4	15.2	4000	6.8	5720	35000	7.6	4000	3.4	7000	35000	
C 80 3_197.9	197.9	14.2	3800	6.1	5710	35000	7.1	3800	3.0	7000	35000	
C 80 3_215.8	215.8	13.0	4000	5.8	5730	35000	6.5	4000	2.9	7000	35000	
C 80 4_261.9	261.9	10.7	4000	4.9	1850	35000	5.3	4000	2.5	2470	35000	
C 80 4_285.7	285.7	9.8	4000	4.5	1890	35000	4.9	4000	2.3	2510	35000	
C 80 4_334.3	334.3	8.4	4000	3.9	1880	35000	4.2	4000	1.9	2500	35000	
C 80 4_364.7	364.7	7.7	4000	3.5	1920	35000	3.8	4000	1.8	2540	35000	
C 80 4_417.5	417.5	6.7	4000	3.1	1910	35000	3.4	4000	1.5	2530	35000	
C 80 4_455.4	455.4	6.1	4000	2.8	1950	35000	3.1	4000	1.4	2570	35000	
C 80 4_529.3	529.3	5.3	4000	2.4	1940	35000	2.6	4000	1.2	2550	35000	
C 80 4_577.4	577.4	4.8	4000	2.2	1970	35000	2.4	4000	1.1	2590	35000	
C 80 4_664.3	664.3	4.2	4000	1.9	1960	35000	2.1	4000	1.0	2570	35000	
C 80 4_724.7	724.7	3.9	4000	1.8	1990	35000	1.9	4000	0.90	2610	35000	
C 80 4_783.4	783.4	3.6	4000	1.6	1970	35000	1.8	4000	0.80	2590	35000	
C 80 4_854.6	854.6	3.3	4000	1.5	2000	35000	1.6	4000	0.80	2620	35000	
C 80 4_945.7	945.7	3.0	4000	1.4	1980	35000	1.5	4000	0.70	2600	35000	
C 80 4_1032	1032	2.7	4000	1.2	2010	35000	1.4	4000	0.60	2630	35000	
C 80 4_1168	1168	2.4	4000	1.1	1980	35000	1.2	4000	0.60	2600	35000	
C 80 4_1274	1274	2.2	4000	1.0	2020	35000	1.1	4000	0.50	2640	35000	
C 80 4_1358	1358	2.1	4000	0.90	1990	35000	1.0	4000	0.50	2610	35000	
C 80 4_1481	1481	1.9	4000	0.90	2030	35000	0.90	4000	0.40	2640	35000	

Bonfiglioli Riduttori

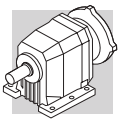

C 80 — 4000 Nm

	i	n_1 = 900 min^{-1}					n_1 = 500 min^{-1}					
		n_2 min^{-1}	M_{n2} Nm	P_{n1} kW	R_{n1} N	R_{n2} N	n_2 min^{-1}	M_{n2} Nm	P_{n1} kW	R_{n1} N	R_{n2} N	
C 80 2_5.6	5.6	160	3500	62	1480	14400	89	3500	34	4970	21600	159
C 80 2_6.1	6.1	147	3600	58	2100	14400	82	3700	33	5270	21200	
C 80 2_7.0	7.0	128	3500	49	2630	17000	71	3500	27	6130	24600	
C 80 2_7.6	7.6	118	3650	47	3060	16800	66	3650	26	6550	24600	
C 80 2_8.9	8.9	102	3500	39	3330	19900	56	3500	22	6800	27800	
C 80 2_9.6	9.6	94	3700	38	3590	19400	52	3700	21	7000	27700	
C 80 2_11.1	11.1	81	3500	31	4160	22800	45	3500	17.4	7000	31200	
C 80 2_12.0	12.0	75	3700	31	4400	22500	42	3700	17.0	7000	31200	
C 80 2_13.8	13.8	65	3500	25	4540	25700	36	3500	14.0	7000	34700	
C 80 2_14.9	14.9	60	3700	25	4770	25500	34	3700	13.7	7000	34700	
C 80 2_16.7	16.7	54	3500	21	5050	28500	30	3500	11.6	7000	35000	
C 80 2_18.1	18.1	50	3700	20	5280	28400	27.7	3700	11.3	7000	35000	
C 80 2_20.5	20.5	44	3550	17.2	5270	31400	24.4	3550	9.5	7000	35000	
C 80 2_22.2	22.2	40	3700	16.5	5610	31600	22.5	3700	9.2	7000	35000	
C 80 2_24.0	24.0	38	3550	14.7	5390	33800	20.9	3550	8.2	7000	35000	
C 80 2_25.9	25.9	35	3700	14.1	5730	34200	19.3	3700	7.9	7000	35000	
C 80 2_31.3	31.3	28.7	3700	11.7	5940	35000	16.0	3700	6.5	7000	35000	
C 80 2_39.1	39.1	23.0	3200	8.1	7000	35000	12.8	3200	4.5	7000	35000	
C 80 3_43.5	43.5	20.7	4000	9.3	7000	35000	11.5	4000	5.2	7000	35000	
C 80 3_47.4	47.4	19.0	4000	8.5	7000	35000	10.5	4000	4.7	7000	35000	
C 80 3_57.3	57.3	15.7	4000	7.1	7000	35000	8.7	4000	3.9	7000	35000	
C 80 3_62.5	62.5	14.4	4000	6.5	7000	35000	8.0	4000	3.6	7000	35000	
C 80 3_70.5	70.5	12.8	4000	5.7	7000	35000	7.1	4000	3.2	7000	35000	
C 80 3_76.9	76.9	11.7	4000	5.3	7000	35000	6.5	4000	2.9	7000	35000	
C 80 3_89.3	89.3	10.1	4000	4.5	7000	35000	5.6	4000	2.5	7000	35000	
C 80 3_97.4	97.4	9.2	4000	4.2	7000	35000	5.1	4000	2.3	7000	35000	
C 80 3_109.5	109.5	8.2	4000	3.7	7000	35000	4.6	4000	2.1	7000	35000	
C 80 3_119.5	119.5	7.5	4000	3.4	7000	35000	4.2	4000	1.9	7000	35000	
C 80 3_136.7	136.7	6.6	4000	3.0	7000	35000	3.7	4000	1.6	7000	35000	
C 80 3_149.1	149.1	6.0	4000	2.7	7000	35000	3.4	4000	1.5	7000	35000	
C 80 3_169.0	169.0	5.3	4000	2.4	7000	35000	3.0	4000	1.3	7000	35000	
C 80 3_184.4	184.4	4.9	4000	2.2	7000	35000	2.7	4000	1.2	7000	35000	
C 80 3_197.9	197.9	4.5	3800	1.9	7000	35000	2.5	3800	1.1	7000	35000	
C 80 3_215.8	215.8	4.2	4000	1.9	7000	35000	2.3	4000	1.0	7000	35000	
C 80 4_261.9	261.9	3.4	4000	1.6	2950	35000	1.9	4000	0.90	3500	35000	
C 80 4_285.7	285.7	3.2	4000	1.4	2990	35000	1.8	4000	0.80	3500	35000	
C 80 4_334.3	334.3	2.7	4000	1.2	2980	35000	1.5	4000	0.70	3500	35000	
C 80 4_364.7	364.7	2.5	4000	1.1	3020	35000	1.4	4000	0.60	3500	35000	
C 80 4_417.5	417.5	2.2	4000	1.0	3000	35000	1.2	4000	0.60	3500	35000	
C 80 4_455.4	455.4	2.0	4000	0.90	3050	35000	1.1	4000	0.50	3500	35000	
C 80 4_529.3	529.3	1.7	4000	0.80	3030	35000	0.90	4000	0.40	3500	35000	
C 80 4_577.4	577.4	1.6	4000	0.70	3070	35000	0.90	4000	0.40	3500	35000	
C 80 4_664.3	664.3	1.4	4000	0.60	3050	35000	0.80	4000	0.30	3500	35000	
C 80 4_724.7	724.7	1.2	4000	0.60	3090	35000	0.70	4000	0.30	3500	35000	
C 80 4_783.4	783.4	1.1	4000	0.50	3060	35000	0.60	4000	0.30	3500	35000	
C 80 4_854.6	854.6	1.1	4000	0.50	3100	35000	0.60	4000	0.30	3500	35000	
C 80 4_945.7	945.7	1.0	4000	0.40	3070	35000	0.50	4000	0.20	3500	35000	
C 80 4_1032	1032	0.90	4000	0.40	3110	35000	0.50	4000	0.20	3500	35000	
C 80 4_1168	1168	0.80	4000	0.40	3080	35000	0.40	4000	0.20	3500	35000	
C 80 4_1274	1274	0.70	4000	0.30	3110	35000	0.40	4000	0.20	3500	35000	
C 80 4_1358	1358	0.70	4000	0.30	3090	35000	0.40	4000	0.20	3500	35000	
C 80 4_1481	1481	0.60	4000	0.30	3120	35000	0.30	4000	0.20	3500	35000	

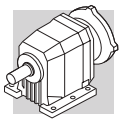

C 90 — 7200 Nm

	i	n_1 = 2800 min^{-1}					n_1 = 1400 min^{-1}					
		n_2 min^{-1}	M_{n2} Nm	P_{n1} kW	R_{n1} N	R_{n2} N	n_2 min^{-1}	M_{n2} Nm	P_{n1} kW	R_{n1} N	R_{n2} N	
C 90 2_5.2	5.2	542	3500	209	1700	12800	271	4300	128	2170	15800	
C 90 2_5.6	5.6	500	3600	198	3240	12800	250	4400	121	4250	16000	
C 90 2_6.8	6.8	414	3850	176	1860	13400	207	4750	108	2210	16400	
C 90 2_7.3	7.3	383	3950	167	3470	13500	191	4850	102	4360	16700	
C 90 2_8.3	8.3	336	4150	154	2010	13800	168	5100	94	2540	17100	
C 90 2_9.0	9.0	310	4250	145	3660	14000	155	5200	89	4720	17500	
C 90 2_10.4	10.4	270	4500	134	990	14200	135	5550	83	1150	17400	
C 90 2_11.2	11.2	249	4600	126	2750	14400	125	5650	78	3460	17800	
C 90 2_12.8	12.8	219	4850	117	580	14700	109	5950	72	840	18200	
C 90 2_13.9	13.9	202	4900	109	2700	15300	101	6050	67	3220	18700	
C 90 2_16.0	16.0	175	5050	98	690	16800	88	6200	60	950	20800	
C 90 2_17.3	17.3	162	5300	94	1670	15900	81	6500	58	2200	19800	
C 90 2_18.7	18.7	150	5050	83	1140	19600	75	6200	51	1500	24300	
C 90 2_20.2	20.2	138	5400	82	1540	17900	69	6600	50	2160	22500	
C 90 2_22.9	22.9	122	5050	68	2110	22400	61	6200	42	2700	27600	
C 90 2_24.8	24.8	113	5400	67	2500	21900	56	6600	41	3340	27300	
C 90 2_27.2	27.2	103	4500	51	6160	26000	52	5500	31	7820	32200	
C 90 2_29.4	29.4	95	4800	50	6560	26000	48	5900	31	8130	32000	
C 90 2_35.1	35.1	80	4400	39	8090	29400	40	5400	24	11100	36300	
C 90 3_39.4	39.4	71	6350	51	10800	23900	36	7100	28	13700	32900	
C 90 3_43.0	43.0	65	6500	48	10800	24700	33	7200	26	13800	34000	
C 90 3_50.3	50.3	56	6800	43	10800	26000	27.8	7100	22	13800	37000	
C 90 3_54.9	54.9	51	7000	40	10900	26500	25.5	7200	21	13900	38300	
C 90 3_59.2	59.2	47	7100	38	10800	27700	23.6	7100	18.9	13900	40000	
C 90 3_64.6	64.6	43	7200	35	10900	29100	21.7	7200	17.6	14000	41300	
C 90 3_74.4	74.4	38	7100	30	10900	31900	18.8	7100	15.0	14000	44400	
C 90 3_81.2	81.2	34	7200	28	10900	33000	17.2	7200	14.0	14100	45900	162
C 90 3_88.2	88.2	32	7100	25	11000	34800	15.9	7100	12.7	14000	47900	
C 90 3_96.2	96.2	29.1	7200	24	11000	35900	14.5	7200	11.8	14100	49400	
C 90 3_107.0	107.0	26.2	7100	21	11000	38100	13.1	7100	10.5	14100	52100	
C 90 3_116.7	116.7	24.0	7200	19.4	11000	39400	12.0	7200	9.7	14100	53700	
C 90 3_134.1	134.1	20.9	7100	16.7	11000	42400	10.4	7100	8.3	14100	57300	
C 90 3_146.3	146.3	19.1	7200	15.5	11000	43800	9.6	7200	7.8	14200	59000	
C 90 3_157.8	157.8	17.7	7100	14.2	11000	45600	8.9	7100	7.1	14100	60000	
C 90 3_172.1	172.1	16.3	7200	13.2	11000	47100	8.1	7200	6.6	14200	60000	
C 90 4_212.4	212.4	13.2	7200	10.9	—	60000	6.6	7200	5.5	1180	60000	
C 90 4_231.7	231.7	12.1	7200	10.0	—	60000	6.0	7200	5.0	1560	60000	
C 90 4_268.5	268.5	10.4	7200	8.6	—	60000	5.2	7200	4.3	1540	60000	
C 90 4_292.9	292.9	9.6	7200	7.9	—	60000	4.8	7200	4.0	1880	60000	
C 90 4_339.0	339.0	8.3	7200	6.8	—	60000	4.1	7200	3.4	1720	60000	
C 90 4_369.8	369.8	7.6	7200	6.3	—	60000	3.8	7200	3.1	2050	60000	
C 90 4_419.0	419.0	6.7	7200	5.5	—	60000	3.3	7200	2.8	1890	60000	
C 90 4_457.1	457.1	6.1	7200	5.1	—	60000	3.1	7200	2.5	2210	60000	
C 90 4_534.2	534.2	5.2	7200	4.3	—	60000	2.6	7200	2.2	2090	60000	
C 90 4_582.8	582.8	4.8	7200	4.0	—	60000	2.4	7200	2.0	2270	60000	
C 90 4_652.8	652.8	4.3	7200	3.6	—	60000	2.1	7200	1.8	2160	60000	
C 90 4_712.2	712.2	3.9	7200	3.3	—	60000	2.0	7200	1.6	2290	60000	
C 90 4_773.6	773.6	3.3	7200	3.0	—	60000	1.8	7200	1.5	2250	60000	
C 90 4_844.0	844.0	3.0	7200	2.7	—	60000	1.7	7200	1.4	2310	60000	
C 90 4_922.3	922.3	2.8	7200	2.5	—	60000	1.5	7200	1.3	2260	60000	
C 90 4_1006	1006	2.5	7200	2.3	—	60000	1.4	7200	1.2	2320	60000	
C 90 4_1137	1137	2.3	7200	2.0	—	60000	1.2	7200	1.0	2270	60000	
C 90 4_1240	1240	2.2	7200	1.9	—	60000	1.1	7200	0.90	2230	60000	

(—) Contact our technical service department advising radial load data (rotation direction, orientation, position)

Bonfiglioli Riduttori

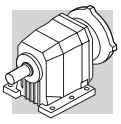

C 90 — 7200 Nm

	i	n_1 = 900 min^{-1}					n_1 = 500 min^{-1}					
		n_2 min^{-1}	M_{n2} Nm	P_{n1} kW	R_{n1} N	R_{n2} N	n_2 min^{-1}	M_{n2} Nm	P_{n1} kW	R_{n1} N	R_{n2} N	
C 90 2_5.2	5.2	174	4900	94	2560	18200	97	5850	62	3010	21600	
C 90 2_5.6	5.6	161	5050	89	4640	18100	89	6000	59	5720	21800	
C 90 2_6.8	6.8	133	5450	80	2310	18500	74	6200	51	5130	24600	
C 90 2_7.3	7.3	123	5550	75	4890	18900	68	6550	49	6340	23200	
C 90 2_8.3	8.3	108	5850	70	2700	19300	60	6200	41	8870	27800	
C 90 2_9.0	9.0	100	5950	65	5300	19800	55	6600	40	9660	27600	
C 90 2_10.4	10.4	87	6200	59	2250	21000	48	6200	33	11000	31000	
C 90 2_11.2	11.2	80	6450	57	3960	20400	45	6600	32	11700	30800	
C 90 2_12.8	12.8	70	6250	48	4500	25300	39	6250	27	13200	34100	
C 90 2_13.9	13.9	65	6550	47	5830	24400	36	6550	26	14600	34300	
C 90 2_16.0	16.0	56	6200	38	6570	28700	31	6200	21	15000	38000	
C 90 2_17.3	17.3	52	6550	38	7530	28600	28.9	6550	21	15000	38100	
C 90 2_18.7	18.7	48	6200	33	7120	31000	26.7	6200	18.3	15000	40700	
C 90 2_20.2	20.2	44	6600	32	7780	30800	24.8	6600	18.0	15000	40700	
C 90 2_22.9	22.9	39	6200	27	8310	34200	21.8	6200	14.9	15000	44500	
C 90 2_24.8	24.8	36	6600	26	8950	34100	20.2	6600	14.6	15000	44600	
C 90 2_27.2	27.2	33	5500	20	13400	39200	18.4	5500	11.2	15000	50000	
C 90 2_29.4	29.4	31	5900	19.9	13700	39100	17.0	5900	11.0	15000	50200	
C 90 2_35.1	35.1	25.6	5400	15.3	14100	43800	14.2	5400	8.5	15000	55500	
C 90 3_39.4	39.4	22.8	7100	18.3	15000	40600	12.7	7100	10.1	15000	40600	
C 90 3_43.0	43.0	20.9	7200	17.0	15000	42000	11.6	7200	9.4	15000	42000	
C 90 3_50.3	50.3	17.9	7100	14.3	15000	45400	9.9	7100	7.9	15000	45400	
C 90 3_54.9	54.9	16.4	7200	13.3	15000	46900	9.1	7200	7.4	15000	46900	
C 90 3_59.2	59.2	15.2	7100	12.2	15000	48800	8.4	7100	6.8	15000	48800	
C 90 3_64.6	64.6	13.9	7200	11.3	15000	50400	7.7	7200	6.3	15000	50400	
C 90 3_74.4	74.4	12.1	7100	9.7	15000	53800	6.7	7100	5.4	15000	53800	
C 90 3_81.2	81.2	11.1	7200	9.0	15000	55500	6.2	7200	5.0	15000	55500	162
C 90 3_88.2	88.2	10.2	7100	8.2	15000	57800	5.7	7100	4.5	15000	57800	
C 90 3_96.2	96.2	9.4	7200	7.6	15000	59600	5.2	7200	4.2	15000	59600	
C 90 3_107.0	107.0	8.4	7100	6.7	15000	60000	4.7	7100	3.7	15000	60000	
C 90 3_116.7	116.7	7.7	7200	6.3	15000	60000	4.3	7200	3.5	15000	60000	
C 90 3_134.1	134.1	6.7	7100	5.4	15000	60000	3.7	7100	3.0	15000	60000	
C 90 3_146.3	146.3	6.2	7200	5.0	15000	60000	3.4	7200	2.8	15000	60000	
C 90 3_157.8	157.8	5.7	7100	4.6	15000	60000	3.2	7100	2.5	15000	60000	
C 90 3_172.1	172.1	5.2	7200	4.2	15000	60000	2.9	7200	2.4	15000	60000	
C 90 4_212.4	212.4	4.2	7200	3.5	2090	60000	2.4	7200	2.0	3210	60000	
C 90 4_231.7	231.7	3.9	7200	3.2	2460	60000	2.2	7200	1.8	3290	60000	
C 90 4_268.5	268.5	3.4	7200	2.8	2440	60000	1.9	7200	1.5	3300	60000	
C 90 4_292.9	292.9	3.1	7200	2.5	2620	60000	1.7	7200	1.4	3370	60000	
C 90 4_339.0	339.0	2.7	7200	2.2	2590	60000	1.5	7200	1.2	3340	60000	
C 90 4_369.8	369.8	2.4	7200	2.0	2660	60000	1.4	7200	1.1	3420	60000	
C 90 4_419.0	419.0	2.1	7200	1.8	2630	60000	1.2	7200	1.0	3390	60000	
C 90 4_457.1	457.1	2.0	7200	1.6	2700	60000	1.1	7200	0.90	3460	60000	
C 90 4_534.2	534.2	1.7	7200	1.4	2680	60000	0.90	7200	0.80	3380	60000	
C 90 4_582.8	582.8	1.5	7200	1.3	2750	60000	0.90	7200	0.70	3500	60000	
C 90 4_652.8	652.8	1.4	7200	1.1	2700	60000	0.80	7200	0.60	3450	60000	
C 90 4_712.2	712.2	1.3	7200	1.0	2760	60000	0.70	7200	0.60	3500	60000	
C 90 4_773.6	773.6	1.2	7200	1.0	2720	60000	0.60	7200	0.50	3480	60000	
C 90 4_844.0	844.0	1.1	7200	0.90	2790	60000	0.60	7200	0.50	3500	60000	
C 90 4_922.3	922.3	1.0	7200	0.80	2730	60000	0.50	7200	0.40	3490	60000	
C 90 4_1006	1006	0.90	7200	0.70	2800	60000	0.50	7200	0.40	3500	60000	
C 90 4_1137	1137	0.80	7200	0.70	2740	60000	0.40	7200	0.40	3500	60000	
C 90 4_1240	1240	0.70	7200	0.60	2800	60000	0.40	7200	0.30	3500	60000	

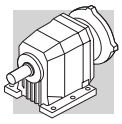

C 100 — 12000 Nm

	i	n_1 = 2800 min^{-1}					n_1 = 1400 min^{-1}					
		n_2 min^{-1}	M_{n2} Nm	P_{n1} kW	R_{n1} N	R_{n2} N	n_2 min^{-1}	M_{n2} Nm	P_{n1} kW	R_{n1} N	R_{n2} N	
C 100 2_4.9	4.9	569	5500	345	1900	20600	285	6800	213	3790	25300	
C 100 2_5.3	5.3	525	5650	327	2790	21000	263	6950	201	4940	25800	
C 100 2_6.5	6.5	429	6150	291	1920	21800	215	7550	179	3950	27000	
C 100 2_7.1	7.1	396	6200	271	3100	22700	198	7650	167	5270	27900	
C 100 2_8.4	8.4	335	6700	248	1870	22800	168	8200	152	3970	28500	
C 100 2_9.0	9.0	309	6800	232	2950	23500	155	8350	142	5190	29200	
C 100 2_10.1	10.1	278	7100	217	1930	24100	139	8750	134	3900	29500	
C 100 2_10.9	10.9	256	7100	200	3240	25700	128	8750	124	5460	31600	
C 100 2_12.5	12.5	225	7650	190	1360	24900	112	9400	117	3260	30800	
C 100 2_13.5	13.5	208	7700	176	2600	26300	104	9500	109	4680	32100	
C 100 2_15.2	15.2	184	8100	164	1270	26600	92	10000	101	2680	32500	
C 100 2_16.5	16.5	170	8250	154	2320	27200	85	10150	95	4420	33600	
C 100 2_18.7	18.7	150	8200	136	1500	30800	75	10000	83	3600	38000	
C 100 2_20.2	20.2	138	8100	124	3047	32200	69	10000	76	5210	39600	
C 100 2_22.2	22.2	126	7500	104	3570	35800	63	9200	64	5960	44100	
C 100 2_24.1	24.1	116	8100	104	3620	35200	58	10000	64	5900	43300	
C 100 2_29.6	29.6	95	6900	72	6380	42400	47	8500	44	9220	52200	
C 100 3_34.3	34.3	82	10350	95	9790	33300	41	11700	54	13000	46400	
C 100 3_36.9	36.9	76	10650	91	10200	34500	38	11800	50	13100	48000	
C 100 3_42.9	42.9	65	11350	83	9640	33200	33	12000	44	13100	51200	
C 100 3_46.2	46.2	61	11700	80	10100	33100	30	12000	41	13300	53100	
C 100 3_53.3	53.3	53	12000	71	9450	36400	26.3	12000	36	13200	56900	
C 100 3_57.4	57.4	49	12000	66	10200	39500	24.4	12000	33	13400	59000	
C 100 3_64.5	64.5	43	12000	59	9950	44100	21.7	12000	29	13400	62300	
C 100 3_69.4	69.4	40	12000	54	10400	45900	20.2	12000	27	13500	64500	
C 100 3_79.4	79.4	35	12000	48	10300	49200	17.6	12000	24	13500	68600	165
C 100 3_85.6	85.6	33	12000	44	10400	51100	16.4	12000	22	13600	70900	
C 100 3_92.7	92.7	30	12000	41	10400	53200	15.1	12000	20	13500	73500	
C 100 3_99.8	99.8	28.1	12000	38	10500	55200	14.0	12000	19.0	13600	75900	
C 100 3_111.9	111.9	25.0	12000	34	10400	58300	12.5	12000	16.9	13500	79800	
C 100 3_120.5	120.5	23.2	12000	31	10500	60400	11.6	12000	15.7	13700	82400	
C 100 3_139.7	139.7	20.0	11050	25	10600	67400	10.0	11050	12.5	13700	85000	
C 100 3_150.4	150.4	18.6	12000	25	10600	66900	9.3	12000	12.6	13700	85000	
C 100 4_162.1	162.1	17.3	12000	24	—	85000	8.6	12000	11.9	—	85000	
C 100 4_185.4	185.4	15.1	12000	21	—	85000	7.6	12000	10.4	—	85000	
C 100 4_199.6	199.6	14.0	12000	19.4	—	85000	7.0	12000	9.7	—	85000	
C 100 4_244.2	244.2	11.5	12000	15.8	—	85000	5.7	12000	7.9	—	85000	
C 100 4_263.0	263.0	10.6	12000	14.7	—	85000	5.3	12000	7.4	—	85000	
C 100 4_300.5	300.5	9.3	12000	12.9	—	85000	4.7	12000	6.4	—	85000	
C 100 4_323.6	323.6	8.7	12000	11.9	—	85000	4.3	12000	6.0	—	85000	
C 100 4_380.5	380.5	7.4	12000	10.2	—	85000	3.7	12000	5.1	—	85000	
C 100 4_409.8	409.8	6.8	12000	9.4	—	85000	3.4	12000	4.7	—	85000	
C 100 4_466.7	466.7	6.0	12000	8.3	—	85000	3.0	12000	4.1	—	85000	
C 100 4_502.6	502.6	5.6	12000	7.7	—	85000	2.8	12000	3.8	—	85000	
C 100 4_582.6	582.6	4.8	12000	6.6	—	85000	2.4	12000	3.3	—	85000	
C 100 4_627.4	627.4	4.5	12000	6.2	—	85000	2.2	12000	3.1	—	85000	
C 100 4_720.3	720.3	3.9	12000	5.4	—	85000	1.9	12000	2.7	—	85000	
C 100 4_775.7	775.7	3.6	12000	5.0	—	85000	1.8	12000	2.5	—	85000	
C 100 4_843.3	843.3	3.3	12000	4.6	—	85000	1.7	12000	2.3	—	85000	
C 100 4_908.2	908.2	3.1	12000	4.3	—	85000	1.5	12000	2.1	830	85000	
C 100 4_1004	1004	2.8	12000	3.9	—	85000	1.4	12000	1.9	—	85000	
C 100 4_1081	1081	2.6	12000	3.6	—	85000	1.3	12000	1.8	870	85000	

(—) Contact our technical service department advising radial load data (rotation direction, orientation, position)

Bonfiglioli Riduttori

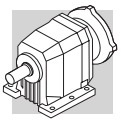

C 100 — 12000 Nm

	i	n_1 = 900 min^{-1}					n_1 = 500 min^{-1}					
		n_2 min^{-1}	M_{n2} Nm	P_{n1} kW	R_{n1} N	R_{n2} N	n_2 min^{-1}	M_{n2} Nm	P_{n1} kW	R_{n1} N	R_{n2} N	
C 100 2_4.9	4.9	183	7800	157	5310	28800	102	9300	104	6720	34400	165
C 100 2_5.3	5.3	169	7950	148	6680	29500	94	9450	98	9740	35200	
C 100 2_6.5	6.5	138	8600	131	5670	31000	77	10250	87	7540	37000	
C 100 2_7.1	7.1	127	8750	123	7050	31800	71	10450	81	10100	37800	
C 100 2_8.4	8.4	108	9350	111	5670	32600	60	10950	72	8530	40100	
C 100 2_9.0	9.0	99	9500	104	7080	33600	55	11350	69	10100	39900	
C 100 2_10.1	10.1	89	10000	98	5540	33600	50	10900	60	10600	44500	
C 100 2_10.9	10.9	82	10150	92	6980	34700	46	11500	58	11300	44300	
C 100 2_12.5	12.5	72	10700	85	3910	35400	40	10850	48	11700	49600	
C 100 2_13.5	13.5	67	10850	80	6440	36700	37	11450	47	12300	49500	
C 100 2_15.2	15.2	59	10800	70	5940	40800	33	10800	39	13000	54700	
C 100 2_16.5	16.5	55	11500	69	6320	39100	30	11500	38	13400	54500	
C 100 2_18.7	18.7	48	10900	58	6310	45100	26.8	10900	32	13400	59800	
C 100 2_20.2	20.2	45	11500	56	6890	45000	24.7	11500	31	14000	60100	
C 100 2_22.2	22.2	40	9850	44	9170	52200	22.5	9850	24	15000	67800	
C 100 2_24.1	24.1	37	10800	44	8930	51200	20.7	10800	25	15000	67200	
C 100 2_29.6	29.6	30	9100	31	12600	61400	16.9	9100	17.0	15000	78300	
C 100 3_34.3	34.3	26.2	11700	35	15000	57800	14.6	11700	19.2	15000	75500	
C 100 3_36.9	36.9	24.4	11800	32	15000	59600	13.5	11800	18.0	15000	77700	
C 100 3_42.9	42.9	21.0	12000	28	15000	63400	11.6	12000	15.7	15000	82300	
C 100 3_46.2	46.2	19.5	12000	26	15000	65600	10.8	12000	14.6	15000	84900	
C 100 3_53.3	53.3	16.9	12000	23	15000	69900	9.4	12000	12.7	15000	85000	
C 100 3_57.4	57.4	15.7	12000	21	15000	72300	8.7	12000	11.8	15000	85000	
C 100 3_64.5	64.5	14.0	12000	18.6	15000	76100	7.8	12000	10.5	15000	85000	
C 100 3_69.4	69.4	13.0	12000	17.5	15000	78600	7.2	12000	9.7	15000	85000	
C 100 3_79.4	79.4	11.3	12000	15.3	15000	83300	6.3	12000	8.5	15000	85000	
C 100 3_85.6	85.6	10.5	12000	14.2	15000	85000	5.8	12000	7.9	15000	85000	
C 100 3_92.7	92.7	9.7	12000	13.1	15000	85000	5.4	12000	7.3	15000	85000	
C 100 3_99.8	99.8	9.0	12000	12.2	15000	85000	5.0	12000	6.8	15000	85000	
C 100 3_111.9	111.9	8.0	12000	10.9	15000	85000	4.5	12000	6.0	15000	85000	
C 100 3_120.5	120.5	7.5	12000	10.1	15000	85000	4.1	12000	5.6	15000	85000	
C 100 3_139.7	139.7	6.4	11500	8.0	15000	85000	3.6	11050	4.5	15000	85000	
C 100 3_150.4	150.4	6.0	12000	8.1	15000	85000	3.3	12000	4.5	15000	85000	
C 100 4_162.1	162.1	5.6	12000	7.7	—	85000	3.1	12000	4.3	—	85000	
C 100 4_185.4	185.4	4.9	12000	6.7	—	85000	2.7	12000	3.7	920	85000	
C 100 4_199.6	199.6	4.5	12000	6.2	—	85000	2.5	12000	3.5	1430	85000	
C 100 4_244.2	244.2	3.7	12000	5.1	—	85000	2.0	12000	2.8	1490	85000	
C 100 4_263.0	263.0	3.4	12000	4.7	—	85000	1.9	12000	2.6	1950	85000	
C 100 4_300.5	300.5	3.0	12000	4.1	—	85000	1.7	12000	2.3	1840	85000	
C 100 4_323.6	323.6	2.8	12000	3.8	850	85000	1.5	12000	2.1	2280	85000	
C 100 4_380.5	380.5	2.4	12000	3.3	700	85000	1.3	12000	1.8	2130	85000	
C 100 4_409.8	409.8	2.2	12000	3.0	1120	85000	1.2	12000	1.7	2550	85000	
C 100 4_466.7	466.7	1.9	12000	2.7	910	85000	1.1	12000	1.5	2340	85000	
C 100 4_502.6	502.6	1.8	12000	2.5	1320	85000	1.0	12000	1.4	2740	85000	
C 100 4_582.6	582.6	1.5	12000	2.1	1100	85000	0.90	12000	1.2	2520	85000	
C 100 4_627.4	627.4	1.4	12000	2.0	1490	85000	0.80	12000	1.1	2910	85000	
C 100 4_720.3	720.3	1.2	12000	1.7	1270	85000	0.70	12000	1.0	2700	85000	
C 100 4_775.7	775.7	1.2	12000	1.6	1650	85000	0.60	12000	0.90	3070	85000	
C 100 4_843.3	843.3	1.1	12000	1.5	1360	85000	0.60	12000	0.80	2790	85000	
C 100 4_908.2	908.2	1.0	12000	1.4	1730	85000	0.60	12000	0.80	3160	85000	
C 100 4_1004	1004	0.90	12000	1.2	1400	85000	0.50	12000	0.70	2830	85000	
C 100 4_1081	1081	0.90	12000	1.1	1770	85000	0.50	12000	0.60	3170	85000	

(—) Contact our technical service department advising radial load data (rotation direction, orientation, position)

27 MOTOR AVAILABILITY

Please be aware that motor-gearbox combinations resulting from the following charts are purely based on geometrical compatibility.

When selecting a gearmotor, refer to procedure specified at paragraph 12 and observe particularly the condition $S \geq f_S$.

(B 22)

		IEC_ BN (IM B5)												
		BN										IEC		
P_{n1}(#) [kW]	2p	0.37	0.75	1.5	2.2	4	4	9.2	18.5	22	30	45	55	90
	4p	0.25	0.55	1.1	1.85	3	4	9.2	15	22	30	47	55	90
	6p	0.12	0.37	0.75	1.1	1.85	2.2	5.5	11	15	18.5	30	37	55
		P63	P71	P80	P90	P100	P112	P132	P160	P180	P200	P225	P250	P280
C 12 2	i =	2.8_66.2		2.8_47.6		2.8_47.6								
C 22 2		3.7_63.3 ⊖ (7.1_8.7)		2.7_54.7		2.7_54.7								
C 22 3		60.0_261.0		60.0_261.0		60.0_261.0								
C 32 2		5.0_66.8 ⊖ (7.2_11.2)		2.9_66.8		2.9_66.8		2.9_25.1						
C 32 3		74.7_274.7		74.7_274.7		74.7_274.7								
C 36 2		4.6_19.0 ⊖ (6.8_10.6)		2.7_19.0		2.7_19.0		2.7_19.0						
C 36 3		38.1_206.4		22.1_206.4		22.1_206.4		22.1_77.6						
C 36 4		230.9_848.5		230.9_848.5		230.9_848.5								
C 41 2		14.2_44.8		2.7_44.8		2.7_44.8		2.7_31.4						
C 41 3		47.0_209.1		28.5_209.1		28.5_209.1		28.5_102.3						
C 41 4		239.9_855.5		239.9_855.5		239.9_855.5								
C 51 2		18.9_57.0		2.6_57.0		2.6_57.0		2.6_40.4	2.6_40.4	2.6_40.4				
C 51 3		59.0_216.7		21.8_216.7		21.8_216.7		21.8_124.4	21.8_124.4	21.8_124.4				
C 51 4		240.9_884.9		240.9_884.9		240.9_884.9								
C 61 2		22.4_38.0		3.7_38.0 ⊖ (6.7_7.5)		3.7_38.0 ⊖ (6.7_7.5)		2.8_38.0	2.8_38.0	2.8_38.0				
C 61 3		67.7_195.8		26.8_195.8		26.8_195.8		26.8_140.5	26.8_140.5	26.8_140.5				
C 61 4		217.4_796.1		217.4_796.1		217.4_796.1								
C 70 2				14.1_34.7 ⊖ (15.3)		14.1_34.7 ⊖ (15.3)		7.5_34.7 ⊖ (8.0)	4.6_34.7	4.6_34.7*	4.6_10.2* ⊖ (9.5)			
C 70 3				41.3_239.3		41.3_239.3		41.3_137.4	41.3_137.4	41.3_137.4*				
C 70 4		251.3_1476		251.3_1476		251.3_1476		251.3_554.7						
C 80 2				20.5_39.1		20.5_39.1		11.1_39.1	7.0_39.1	5.6_39.1	5.6_25.9*	5.6_25.9*		
C 80 3				43.5_215.8		43.5_215.8		43.5_184.4	43.5_184.4	43.5_184.4				
C 80 4		334.3_1481		261.9_1481		261.9_1481		261.9_724.7						
C 90 2				22.9_35.1		22.9_35.1		12.8_35.1	10.4_35.1	10.4_35.1	5.2_29.4	5.2_29.4*	5.2_29.4*	
C 90 3				74.4_172.1		74.4_172.1		39.4_172.1	39.4_172.1	39.4_172.1	39.4_96.2	39.4_96.2*	39.4_96.2*	
C 90 4		339.0_1240		212.4_1240		212.4_1240		212.4_712.2	212.4_712.2	212.4_712.2				
C 100 2						29.6		15.2_29.6	12.5_29.6	12.5_29.6	4.9_29.6	4.9_29.6	4.9_29.6*	4.9_29.6*
C 100 3						79.4_150.4		42.9_150.4	34.3_150.4	34.3_150.4	34.3_99.8	34.3_99.8*	34.3_99.8	34.3_99.8*
C 100 4		380.5_1081		162.1_1081		162.1_1081		162.1_775.7	162.1_775.7	162.1_775.7				

(#) P_{n1} = maximum installable power on input P_

For mounting position B3-B5 B6-B7-B8 the motor marked with * will be supplied in B3/B5

Bonfiglioli Riduttori

(B 23)

		M0	M05	M1	M2	M3	M4	M5
C 05 2		27.1_44.7	5.5_44.7	5.5_44.7				
C 12 2			2.8_66.2	2.8_37.0	2.8_47.7	2.8_47.7		
C 22 2			3.7_63.3 ⛔ (7.1_8.7)	3.7_43.3 ⛔ (7.1_8.7)	2.7_54.7	2.7_54.7		
C 22 3			60.0_261.0	60.0_261.0	60.0_261.0	60.0_261.0		
C 32 2				5.0_52.4 ⛔ (7.2_11.2)	2.9_66.8	2.9_66.8	2.9_25.1	
C 32 3			74.7_274.7	74.7_274.7	74.7_274.7	74.7_274.7		
C 36 2				4.6_19.0 ⛔ (6.8_10.6)	2.7_19.0	2.7_19.0	2.7_19.0	
C 36 3				38.1_162.0	22.1_206.4	22.1_206.4	22.1_77.6	
C 36 4			230.9_848.5	230.9_848.5	230.9_848.5	230.9_848.5		
C 41 2				14.2_44.8	2.7_44.8	2.7_44.8	2.7_31.4	
C 41 3				47.0_209.1	28.5_209.1	28.5_209.1	28.5_102.3	
C 41 4			239.9_855.5	239.9_855.5	239.9_855.5	239.9_855.5		
C 51 2				18.9_57.0	2.6_57.0	2.6_57.0	2.6_40.4	2.6_40.4
C 51 3				59.0_216.7	21.8_216.7	21.8_216.7	21.8_124.4	21.8_124.4
C 51 4	**i =**			240.9_884.9	240.9_884.9	240.9_884.9		
C 61 2					3.7_38.0 ⛔ (6.7_7.5)	3.7_38.0 ⛔ (6.7_7.5)	2.8_38.0	2.8_38.0
C 61 3					26.8_195.8	26.8_195.8	26.8_140.5	26.8_140.5
C 61 4				217.4_796.1	217.4_796.1	217.4_796.1		
C 70 2					14.1_34.7 ⛔ (15.3)	14.1_34.7 ⛔ (15.3)	7.5_34.7 ⛔ (8.0)	7.5_34.7 ⛔ (8.0)
C 70 3					41.3_239.3	41.3_239.3	41.3_137.4	41.3_137.4
C 70 4				251.3_1476	251.3_1476	251.3_1476	251.3_554.7	
C 80 2						20.5_39.1	11.1_39.1	11.1_39.1
C 80 3						43.5_215.8	43.5_184.4	43.5_184.4
C 80 4				334.3_1481	261.9_1481	261.9_1481	261.9_724.7	
C 90 2						22.9_35.1	12.8_35.1	12.8_35.1
C 90 3						74.4_172.1	39.4_172.1	39.4_172.1
C 90 4				339.0_1240	212.4_1240	212.4_1240	212.4_712.2	
C 100 2							15.2_29.6	15.2_29.6
C 100 3							42.9_150.4	42.9_150.4
C 100 4				380.5_1081	162.1_1081	162.1_1081	162.1_775.7	

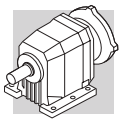

Motor adapters matching the most popular brands of servomotors are available for units size C12… C61. Dimensions of servomotor inputs are provided within the drawing section for each frame size. The code **SK** applies for inputs featuring a conventional keyway, while through the specification of the **SC** code the input shaft will feature a clamping device instead.

(B 24)

		SERVO INPUT							
		SK60A	SK60B	SK80A	SK80B	SK80C	SK95A	SK95B	SK95C
		SC60A	SC60B	SC80A	SC80B	SC80C	SC95A	SC95B	SC95C
C 12 2	i =	2.8_66.2	2.8_66.2	2.8_66.2		2.8_47.6	2.8_66.2	2.8_47.6	2.8_47.6
C 22 2		3.7_63.3 ⊖ (7.1_8.7)	3.7_63.3 ⊖ (7.1_8.7)	3.7_63.3 ⊖ (7.1_8.7)		2.7_54.7	3.7_63.3 ⊖ (7.1_8.7)	2.7_54.7	2.7_54.7
C 22 3		60.0_261.0	60.0_261.0	60.0_261.0		60.0_261.0	60.0_261.0	60.0_261.0	60.0_261.0
C 32 2		5.0_66.8 ⊖ (7.2_11.2)	5.0_66.8 ⊖ (7.2_11.2)	5.0_66.8 ⊖ (7.2_11.2)		2.9_66.8	5.0_66.8 ⊖ (7.2_11.2)	2.9_66.8	2.9_66.8
C 32 3		74.7_274.7	74.7_274.7	74.7_274.7		74.7_274.7	74.7_274.7	74.7_274.7	74.7_274.7
C 36 2		4.6_19.0 ⊖ (6.8_10.6)	4.6_19.0 ⊖ (6.8_10.6)	4.6_19.0 ⊖ (6.8_10.6)		2.7_19.0	4.6_19.0 ⊖ (6.8_10.6)	2.7_19.0	2.7_19.0
C 36 3		38.1_206.4	38.1_206.4	38.1_206.4		22.1_206.4	38.1_206.4	22.1_206.4	22.1_206.4
C 36 4		230.9_848.5	230.9_848.5	230.9_848.5		230.9_848.5	230.9_848.5	230.9_848.5	230.9_848.5
C 41 2					6.0_44.8 ⊖ (6.4_12.4)	2.7_44.8	6.0_44.8 ⊖ (6.4_12.4)	2.7_44.8	2.7_44.8
C 41 3					47.0_209.1	28.5_209.1	47.0_209.1	28.5_209.1	28.5_209.1
C 41 4		239.9_855.5	239.9_855.5	239.9_855.5		239.9_855.5	239.9_855.5	239.9_855.5	239.9_855.5
C 51 2					18.9_57.0	2.6_57.0	18.9_57.0	2.6_57.0	2.6_57.0
C 51 3					59.0_216.7	21.8_216.7	59.0_216.7	21.8_216.7	21.8_216.7
C 51 4						240.9_884.9	240.9_884.9	240.9_884.9	240.9_884.9
C 61 2						3.7_38.0 ⊖ (6.7_7.5)	22.4_38.0	3.7_38.0 ⊖ (6.7_7.5)	3.7_38.0 ⊖ (6.7_7.5)
C 61 3						26.8_195.8	67.7_195.8	26.8_195.8	26.8_195.8
C 61 4					217.4_796.1	217.4_796.1	217.4_796.1	217.4_796.1	217.4_796.1

(B 25)

		SK110A	SK110B	SK130A	SK130B	SK180A	SK180B
		SC110A	SC110B	SC130A	SC130B	SC180A	SC180B
C 12 2	i =	2.8_47.6	2.8_47.6				
C 22 2		2.7_54.7	2.7_54.7				
C 22 3		60.0_261.0	60.0_261.0				
C 32 2		2.9_66.8	2.9_66.8	2.9_66.8			
C 32 3		74.7_274.7	74.7_274.7				
C 36 2		2.7_19.0	2.7_19.0	2.7_19.0			
C 36 3		22.1_206.4	22.1_206.4	22.1_206.4			
C 36 4		230.9_848.5	230.9_848.5				
C 41 2		2.7_44.8	2.7_44.8	2.7_44.8	2.7_31.4	2.7_31.4	2.7_31.4
C 41 3		28.5_209.1	28.5_209.1	28.5_209.1	28.5_102.3	28.5_102.3	28.5_102.3
C 41 4		239.9_855.5	239.9_855.5				
C 51 2		2.6_57.0	2.6_57.0	2.6_57.0	2.6_40.4	2.6_40.4	2.6_40.4
C 51 3		21.8_216.7	21.8_216.7	21.8_216.7	21.8_124.4	21.8_124.4	21.8_124.4
C 51 4		240.9_884.9	240.9_884.9	240.9_884.9			
C 61 2		3.7_38.0 ⊖ (6.7_7.5)	3.7_38.0 ⊖ (6.7_7.5)	3.7_38.0 ⊖ (6.7_7.5)	2.8_38.0	2.8_38.0	2.8_38.0
C 61 3		26.8_195.8	26.8_195.8	26.8_195.8	26.8_140.5	26.8_140.5	26.8_140.5
C 61 4		217.4_796.1	217.4_796.1	217.4_796.1			

28 MOMENT OF INERTIA

The following charts indicate moment of inertia values Jr [kgm^2] referred to the gear unit high speed shaft. A key to the symbols used follows:

Values under this icon refer to compact gear units, without motor. To obtain the overall moment of inertia for the gearmotor just add the value of the inertia for the specific compact motor, given in the relevant rating chart.

Values under this symbol refer to gearboxes with IEC motor adaptor (IEC size...).

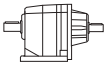

This symbol refers to gearbox values.

Values under this symbol refer to gear unit with servomotor input adapter.

C 05

	i	J (•10^{-4}) [kgm^2]
C 05_5.5	5.5	0.29
C 05_6.7	6.7	0.29
C 05_7.4	7.4	0.28
C 05_9.3	9.3	0.17
C 05_11.2	11.2	0.16
C 05_12.5	12.5	0.16
C 05_15.6	15.6	0.09
C 05_18.9	18.9	0.09
C 05_21.0	21.0	0.08
C 05_27.1	27.1	0.04
C 05_32.8	32.8	0.04
C 05_36.4	36.4	0.04
C 05_40.3	40.3	0.03
C 05_44.7	44.7	0.03

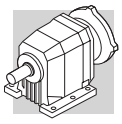

C 12

	i	J (•10-4) [kgm2]							
			IEC						
			63	71	80	90	100	112	
C 12 2_2.8	2.8	0.44	1.9	1.9	3.3	3.2	4.5	4.5	1.3
C 12 2_3.2	3.2	0.34	1.8	1.8	3.2	3.1	4.4	4.4	1.2
C 12 2_3.7	3.7	0.29	1.8	1.7	3.1	3.1	4.4	4.4	1.2
C 12 2_4.3	4.3	0.21	1.7	1.7	3.1	3.0	4.3	4.3	1.1
C 12 2_4.9	4.9	0.19	1.7	1.7	3.0	3.0	4.3	4.3	1.1
C 12 2_5.6	5.6	0.15	1.6	1.6	3.0	2.9	4.2	4.2	1.0
C 12 2_6.2	6.2	0.12	1.6	1.6	3.0	2.9	4.2	4.2	1.0
C 12 2_7.6	7.6	0.33	1.8	1.8	3.2	3.1	4.4	4.4	1.2
C 12 2_8.8	8.8	0.32	1.8	1.8	3.2	3.1	4.4	4.4	1.2
C 12 2_10.1	10.1	0.23	1.7	1.7	3.1	3.0	4.3	4.3	1.1
C 12 2_11.9	11.9	0.17	1.6	1.6	3.0	3.0	4.2	4.2	1.1
C 12 2_13.4	13.4	0.16	1.6	1.6	3.0	2.9	4.2	4.2	1.1
C 12 2_15.4	15.4	0.12	1.6	1.6	3.0	2.9	4.2	4.2	1.0
C 12 2_17.2	17.2	0.10	1.6	1.6	2.9	2.9	4.2	4.2	1.0
C 12 2_18.4	18.4	0.08	1.6	1.5	2.9	2.9	4.2	4.2	0.98
C 12 2_20.6	20.6	0.08	1.5	1.5	2.9	2.9	4.2	4.2	0.98
C 12 2_23.2	23.2	0.07	1.5	1.5	2.9	2.9	4.1	4.1	0.97
C 12 2_25.4	25.4	0.06	1.5	1.5	2.9	2.8	4.1	4.1	0.96
C 12 2_29.5	29.5	0.05	1.5	1.5	2.9	2.8	4.1	4.1	0.95
C 12 2_32.8	32.8	0.04	1.5	1.5	2.9	2.8	4.1	4.1	0.94
C 12 2_37.0	37.0	0.03	1.5	1.5	2.9	2.8	4.1	4.1	0.93
C 12 2_42.3	42.3	0.03	1.5	1.5	2.9	2.8	4.1	4.1	0.93
C 12 2_47.6	47.6	0.02	1.5	1.5	2.9	2.8	4.1	4.1	0.92
C 12 2_55.2	55.2	0.02	1.5	1.5	—	—	—	—	0.92
C 12 2_66.2	66.2	0.01	1.5	1.5	—	—	—	—	0.91

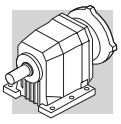

C 12

	i	J (•10-4) [kgm2]									
		SERVO									
		60A		60B 80A		95A		80C 95B 110A		95C 110B	
		SK	SC	SK	SC	SK	SC	SK	SC	SK	SC
C 12 2_2.8	2.8	0.71	0.97	0.73	1.2	3.3	3.7	3.3	3.8	3.2	4.2
C 12 2_3.2	3.2	0.61	0.87	0.63	1.1	3.2	3.6	3.2	3.7	3.1	4.1
C 12 2_3.7	3.7	0.56	0.82	0.58	1.0	3.1	3.5	3.1	3.6	3.1	4.1
C 12 2_4.3	4.3	0.48	0.74	0.50	0.94	3.0	3.5	3.1	3.6	3.0	4.0
C 12 2_4.9	4.9	0.46	0.72	0.48	0.92	3.0	3.4	3.0	3.5	3.0	4.0
C 12 2_5.6	5.6	0.42	0.68	0.44	0.88	3.0	3.4	3.0	3.5	2.9	3.9
C 12 2_6.2	6.2	0.39	0.65	0.41	0.85	2.9	3.4	3.0	3.5	2.9	3.9
C 12 2_7.6	7.6	0.60	0.86	0.62	1.1	3.2	3.6	3.2	3.7	3.1	4.1
C 12 2_8.8	8.8	0.59	0.85	0.61	1.0	3.1	3.6	3.2	3.7	3.1	4.1
C 12 2_10.1	10.1	0.50	0.76	0.52	0.96	3.1	3.5	3.1	3.6	3.0	4.0
C 12 2_11.9	11.9	0.44	0.70	0.46	0.90	3.0	3.4	3.0	3.5	3.0	4.0
C 12 2_13.4	13.4	0.43	0.69	0.45	0.83	3.0	3.4	3.0	3.5	2.9	3.9
C 12 2_15.4	15.4	0.39	0.65	0.41	0.85	2.9	3.4	3.0	3.5	2.9	3.9
C 12 2_17.2	17.2	0.37	0.63	0.39	0.83	2.9	3.4	2.9	3.4	2.9	3.9
C 12 2_18.4	18.4	0.35	0.61	0.37	0.81	2.9	3.3	2.9	3.4	2.9	3.9
C 12 2_20.6	20.6	0.35	0.61	0.37	0.81	2.9	3.3	2.9	3.4	2.9	3.9
C 12 2_23.2	23.2	0.34	0.60	0.36	0.80	2.9	3.3	2.9	3.4	2.9	3.9
C 12 2_25.4	25.4	0.33	0.59	0.35	0.79	2.9	3.3	2.9	3.4	2.8	3.8
C 12 2_29.5	29.5	0.32	0.58	0.34	0.78	2.9	3.3	2.9	3.4	2.8	3.8
C 12 2_32.8	32.8	0.34	0.60	0.33	0.77	2.9	3.3	2.9	3.4	2.8	3.8
C 12 2_37.0	37.0	0.30	0.56	0.32	0.76	2.9	3.3	2.9	3.4	2.8	3.8
C 12 2_42.3	42.3	0.30	0.56	0.32	0.76	2.9	3.3	2.9	3.4	2.8	3.8
C 12 2_47.6	47.6	0.29	0.55	0.31	0.75	2.8	3.3	2.9	3.4	2.8	3.8
C 12 2_55.2	55.2	0.29	0.55	0.31	0.75	2.8	3.3	—	—	—	—
C 12 2_66.2	66.2	0.28	0.54	0.30	0.74	2.8	3.3	—	—	—	—

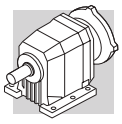

C 22

	i	J (•10-4) [kgm2]							
			IEC						
			63	71	80	90	100	112	
C 22 2_2.7	2.7	1.2	—	—	4.0	4.0	5.3	5.3	3.1
C 22 2_3.3	3.3	0.83	—	—	3.7	3.6	4.9	4.9	2.7
C 22 2_3.7	3.7	0.72	2.2	2.2	3.6	3.5	4.8	4.8	2.6
C 22 2_4.3	4.3	0.56	2.0	2.0	3.4	3.3	4.6	4.6	2.4
C 22 2_4.8	4.8	0.48	2.0	1.9	3.3	3.3	4.6	4.6	2.4
C 22 2_5.6	5.6	0.36	1.8	1.8	3.2	3.2	4.4	4.4	2.2
C 22 2_6.1	6.1	0.29	1.8	1.7	3.1	3.1	4.4	4.4	2.2
C 22 2_7.1	7.1	0.77	—	—	3.6	3.6	4.8	4.8	2.6
C 22 2_8.7	8.7	0.55	—	—	3.4	3.3	4.6	4.6	2.4
C 22 2_9.6	9.6	0.50	2.0	2.0	3.3	3.3	4.6	4.6	2.4
C 22 2_11.1	11.1	0.39	1.9	1.8	3.2	3.2	4.5	4.5	2.3
C 22 2_12.4	12.4	0.35	1.8	1.8	3.2	3.1	4.4	4.4	2.2
C 22 2_14.5	14.5	0.36	1.7	1.7	3.1	3.1	4.3	4.3	2.1
C 22 2_15.8	15.8	0.20	1.7	1.7	3.1	3.0	4.3	4.3	2.1
C 22 2_18.1	18.1	0.18	1.6	1.6	3.0	3.0	4.3	4.3	2.0
C 22 2_20.0	20.0	0.15	1.6	1.6	3.0	2.9	4.2	4.2	2.0
C 22 2_21.5	21.5	0.13	1.6	1.6	3.0	2.9	4.2	4.2	2.0
C 22 2_24.3	24.3	0.12	1.6	1.6	3.0	2.9	4.2	4.2	2.0
C 22 2_27.2	27.2	0.10	1.6	1.6	3.0	2.9	4.2	4.2	2.0
C 22 2_29.6	29.6	0.09	1.6	1.5	2.9	2.9	4.2	4.2	2.0
C 22 2_33.1	33.1	0.07	1.5	1.5	2.9	2.9	4.2	4.2	1.9
C 22 2_36.8	36.8	0.06	1.5	1.5	2.9	2.8	4.1	4.1	1.9
C 22 2_43.3	43.3	0.05	1.5	1.5	2.9	2.8	4.1	4.1	1.9
C 22 2_48.6	48.6	0.04	1.5	1.5	2.9	2.8	4.1	4.1	1.9
C 22 2_54.7	54.7	0.03	1.5	1.5	2.9	2.8	4.1	4.1	1.9
C 22 2_63.3	63.3	0.02	1.5	1.5	—	—	—	—	1.9
C 22 3_60.0	60.0	0.04	1.5	1.5	2.9	2.8	4.1	4.1	0.94
C 22 3_65.3	65.3	0.03	1.5	1.5	2.9	2.8	4.1	4.1	0.93
C 22 3_74.8	74.8	0.03	1.5	1.5	2.9	2.8	4.1	4.1	0.93
C 22 3_82.6	82.6	0.03	1.5	1.5	2.9	2.8	4.1	4.1	0.93
C 22 3_88.5	88.5	0.03	1.5	1.5	2.9	2.8	4.1	4.1	0.93
C 22 3_100.2	100.2	0.03	1.5	1.5	2.9	2.8	4.1	4.1	0.93
C 22 3_112.0	112.0	0.03	1.5	1.5	2.9	2.8	4.1	4.1	0.93
C 22 3_122.2	122.2	0.03	1.5	1.5	2.9	2.8	4.1	4.1	0.93
C 22 3_136.5	136.5	0.02	1.5	1.5	2.9	2.8	4.1	4.1	0.92
C 22 3_151.7	151.7	0.02	1.5	1.5	2.9	2.8	4.1	4.1	0.92
C 22 3_178.5	178.5	0.02	1.5	1.5	2.9	2.8	4.1	4.1	0.92
C 22 3_200.7	200.7	0.02	1.5	1.5	2.9	2.8	4.1	4.1	0.92
C 22 3_225.8	225.8	0.02	1.5	1.5	2.9	2.8	4.1	4.1	0.92
C 22 3_261.0	261.0	0.02	1.5	1.5	2.9	2.8	4.1	4.1	0.92

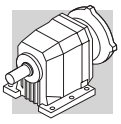

C 22

	i	J (•10-4) [kgm2]									
		SERVO									
		60A		60B 80A		95A		80C 95B 110A		95C 110B	
		SK	SC	SK	SC	SK	SC	SK	SC	SK	SC
C 22 2_2.7	2.7	—	—	—	—	—	—	4.0	4.5	4.0	5.0
C 22 2_3.3	3.3	—	—	—	—	—	—	3.7	4.2	3.6	4.6
C 22 2_3.7	3.7	0.99	1.3	1.0	1.4	3.5	4.0	3.6	4.1	3.5	4.5
C 22 2_4.3	4.3	0.83	1.1	0.85	1.3	3.4	3.8	3.4	3.9	3.3	4.3
C 22 2_4.8	4.8	0.75	1.0	0.77	1.2	3.3	3.7	3.3	3.8	3.3	4.3
C 22 2_5.6	5.6	0.63	0.89	0.65	1.1	3.2	3.6	3.2	3.7	3.2	4.2
C 22 2_6.1	6.1	0.56	0.82	0.58	1.0	3.1	3.5	3.1	3.6	3.1	4.1
C 22 2_7.1	7.1	—	—	—	—	—	—	3.6	4.1	3.6	4.6
C 22 2_8.7	8.7	—	—	—	—	—	—	3.4	3.9	3.3	4.3
C 22 2_9.6	9.6	0.77	1.0	0.79	1.2	3.3	3.8	3.3	3.8	3.3	4.3
C 22 2_11.1	11.1	0.66	0.92	0.68	1.1	3.2	3.6	3.2	3.7	3.2	4.2
C 22 2_12.4	12.4	0.62	0.88	0.64	1.1	3.2	3.6	3.2	3.7	3.1	4.1
C 22 2_14.5	14.5	0.63	0.89	0.65	1.1	3.2	3.6	3.1	3.6	3.1	4.1
C 22 2_15.8	15.8	0.47	0.73	0.49	0.93	3.0	3.5	3.1	3.6	3.0	4.0
C 22 2_18.1	18.1	0.45	0.71	0.47	0.91	3.0	3.4	3.0	3.5	3.0	4.0
C 22 2_20.0	20.0	0.42	0.68	0.44	0.88	3.0	3.4	3.0	3.5	2.9	3.9
C 22 2_21.5	21.5	0.40	0.66	0.42	0.86	3.0	3.4	3.0	3.5	2.9	3.9
C 22 2_24.3	24.3	0.39	0.65	0.41	0.85	2.9	3.4	3.0	3.5	2.9	3.9
C 22 2_27.2	27.2	0.37	0.63	0.39	0.83	2.9	3.4	3.0	3.5	2.9	3.9
C 22 2_29.6	29.6	0.36	0.62	0.38	0.82	2.9	3.3	2.9	3.4	2.9	3.9
C 22 2_33.1	33.1	0.34	0.60	0.36	0.80	2.9	3.3	2.9	3.4	2.9	3.9
C 22 2_36.8	36.8	0.33	0.59	0.35	0.79	2.9	3.3	2.9	3.4	2.8	3.8
C 22 2_43.3	43.3	0.32	0.58	0.34	0.78	2.9	3.3	2.9	3.4	2.8	3.8
C 22 2_48.6	48.6	0.31	0.57	0.33	0.77	2.9	3.3	2.9	3.4	2.8	3.8
C 22 2_54.7	54.7	0.30	0.56	0.32	0.76	2.9	3.3	2.9	3.4	2.8	3.8
C 22 2_63.3	63.3	0.29	0.55	0.31	0.75	2.8	3.3	—	—	—	—
C 22 3_60.0	60.0	0.31	0.57	0.33	0.77	2.9	3.3	2.9	3.4	2.8	3.8
C 22 3_65.3	65.3	0.30	0.56	0.32	0.76	2.9	3.3	2.9	3.4	2.8	3.8
C 22 3_74.8	74.8	0.30	0.56	0.32	0.76	2.9	3.3	2.9	3.4	2.8	3.8
C 22 3_82.6	82.6	0.30	0.56	0.32	0.76	2.9	3.3	2.9	3.4	2.8	3.8
C 22 3_88.5	88.5	0.30	0.56	0.32	0.76	2.9	3.3	2.9	3.4	2.8	3.8
C 22 3_100.2	100.2	0.30	0.56	0.32	0.76	2.9	3.3	2.9	3.4	2.8	3.8
C 22 3_112.0	112.0	0.30	0.56	0.32	0.76	2.9	3.3	2.9	3.4	2.8	3.8
C 22 3_122.2	122.2	0.30	0.56	0.32	0.76	2.9	3.3	2.9	3.4	2.8	3.8
C 22 3_136.5	136.5	0.29	0.55	0.31	0.75	2.8	3.3	2.9	3.4	2.8	3.8
C 22 3_151.7	151.7	0.29	0.55	0.31	0.75	2.8	3.3	2.9	3.4	2.8	3.8
C 22 3_178.5	178.5	0.29	0.55	0.31	0.75	2.8	3.3	2.9	3.4	2.8	3.8
C 22 3_200.7	200.7	0.29	0.55	0.31	0.75	2.8	3.3	2.9	3.4	2.8	3.8
C 22 3_225.8	225.8	0.29	0.55	0.31	0.75	2.8	3.3	2.9	3.4	2.8	3.8
C 22 3_261.0	261.0	0.29	0.55	0.31	0.75	2.8	3.3	2.9	3.4	2.8	3.8

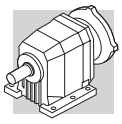

C 32

	i	J (•10-4) [kgm2]								
			IEC							
			63	71	80	90	100	112	132	
C 32 2_2.9	2.9	2.3	—	—	5.2	5.1	6.4	6.4	20	4.6
C 32 2_3.4	3.4	1.8	—	—	4.6	4.6	5.9	5.9	20	4.0
C 32 2_3.7	3.7	1.6	—	—	4.4	4.3	5.6	5.6	20	3.8
C 32 2_4.5	4.5	1.2	—	—	4.0	4.0	5.2	5.2	19	3.4
C 32 2_5.0	5.0	0.87	2.3	2.3	3.7	3.7	5.0	5.0	19	3.1
C 32 2_5.7	5.7	0.82	2.3	2.3	3.7	3.6	4.9	4.9	19	3.0
C 32 2_6.3	6.3	0.63	2.1	2.1	3.5	3.4	4.7	4.7	18	2.8
C 32 2_7.2	7.2	1.5	—	—	4.4	4.3	5.6	5.6	19	3.7
C 32 2_8.5	8.5	1.2	—	—	4.1	4.0	5.3	5.3	19	3.4
C 32 2_9.3	9.3	1.1	—	—	3.9	3.9	5.1	5.1	19	3.3
C 32 2_11.2	11.2	0.83	—	—	3.7	3.6	4.9	4.9	19	3.0
C 32 2_12.3	12.3	0.60	2.1	2.1	3.4	3.4	4.7	4.7	18	2.8
C 32 2_14.1	14.1	0.61	2.1	2.1	3.5	3.4	4.7	4.7	18	2.8
C 32 2_15.6	15.6	0.46	1.9	1.9	3.3	3.2	4.5	4.5	18	2.7
C 32 2_18.2	18.2	0.42	1.9	1.9	3.3	3.2	4.5	4.5	18	2.6
C 32 2_20.1	20.1	0.34	1.8	1.8	3.2	3.1	4.4	4.4	18	2.6
C 32 2_22.9	22.9	0.31	1.8	1.8	3.2	3.1	4.4	4.4	17	2.5
C 32 2_25.1	25.1	0.25	1.7	1.7	3.1	3.0	4.3	4.3	17	2.5
C 32 2_26.9	26.9	0.24	1.7	1.7	3.1	3.0	4.3	4.3	—	2.5
C 32 2_29.8	29.8	0.19	1.7	1.7	3.0	3.0	4.3	4.3	—	2.4
C 32 2_33.1	33.1	0.19	1.7	1.7	3.0	3.0	4.3	4.3	—	2.4
C 32 2_36.1	36.1	0.14	1.6	1.6	3.0	2.9	4.2	4.2	—	2.4
C 32 2_40.7	40.7	0.14	1.6	1.6	3.0	2.9	4.2	4.2	—	2.4
C 32 2_45.3	45.3	0.10	1.6	1.6	3.0	2.9	4.2	4.2	—	2.3
C 32 2_52.4	52.4	0.08	1.6	1.6	2.9	2.9	4.2	4.2	—	2.3
C 32 2_59.4	59.4	0.07	1.5	1.5	2.9	2.9	4.2	4.2	—	2.3
C 32 2_66.8	66.8	0.05	1.5	1.5	2.9	2.8	4.1	4.1	—	2.3
C 32 3_74.7	74.7	0.06	1.5	1.5	2.9	2.9	4.1	4.1	—	0.96
C 32 3_82.6	82.6	0.06	1.5	1.5	2.9	2.8	4.1	4.1	—	0.96
C 32 3_94.2	94.2	0.06	1.5	1.5	2.9	2.8	4.1	4.1	—	0.96
C 32 3_103.3	103.3	0.05	1.5	1.5	2.9	2.8	4.1	4.1	—	0.95
C 32 3_110.6	110.6	0.05	1.5	1.5	2.9	2.8	4.1	4.1	—	0.95
C 32 3_122.4	122.4	0.05	1.5	1.5	2.9	2.8	4.1	4.1	—	0.95
C 32 3_136.0	136.0	0.05	1.5	1.5	2.9	2.8	4.1	4.1	—	0.95
C 32 3_148.4	148.4	0.05	1.5	1.5	2.9	2.8	4.1	4.1	—	0.95
C 32 3_167.4	167.4	0.05	1.5	1.5	2.9	2.8	4.1	4.1	—	0.95
C 32 3_186.0	186.0	0.04	1.5	1.5	2.9	2.8	4.1	4.1	—	0.94
C 32 3_215.6	215.6	0.04	1.5	1.5	2.9	2.8	4.1	4.1	—	0.94
C 32 3_244.2	244.2	0.04	1.5	1.5	2.9	2.8	4.1	4.1	—	0.94
C 32 3_274.7	274.7	0.04	1.5	1.5	2.9	2.8	4.1	4.1	—	0.94

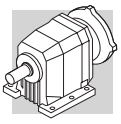

C 32

	i	J (•10-4) [kgm2]											
		SERVO											
		60A		60B 80A		95A		80C 95B 110A		95C 110B		130A	
		SK	SC	SK	SC	SK	SC	SK	SC	SK	SC	SK	SC
C 32 2_2.9	2.9	—	—	—	—	—	—	5.2	5.7	5.1	6.1	5.1	6.1
C 32 2_3.4	3.4	—	—	—	—	—	—	4.6	5.1	4.6	5.6	4.6	5.6
C 32 2_3.7	3.7	—	—	—	—	—	—	4.4	4.9	4.3	5.3	4.3	5.3
C 32 2_4.5	4.5	—	—	—	—	—	—	4.0	4.5	4.0	5.0	4.0	5.0
C 32 2_5.0	5.0	1.1	1.4	1.2	1.6	3.7	4.1	3.7	4.2	3.7	4.7	3.7	4.7
C 32 2_5.7	5.7	1.1	1.4	1.1	1.5	3.6	4.1	3.7	4.2	3.6	4.6	3.6	4.6
C 32 2_6.3	6.3	0.90	1.2	0.92	1.4	3.5	3.9	3.5	4.0	3.4	4.4	3.4	4.4
C 32 2_7.2	7.2	—	—	—	—	—	—	4.4	4.9	4.3	5.3	4.3	5.3
C 32 2_8.5	8.5	—	—	—	—	—	—	4.1	4.6	4.0	5.0	4.0	5.0
C 32 2_9.3	9.3	—	—	—	—	—	—	3.9	4.4	3.9	4.9	3.9	4.9
C 32 2_11.2	11.2	—	—	—	—	—	—	3.7	4.2	3.6	4.6	3.6	4.6
C 32 2_12.3	12.3	0.87	1.1	0.89	1.3	3.4	3.9	3.4	3.9	3.4	4.4	3.4	4.4
C 32 2_14.1	14.1	0.88	1.1	0.90	1.3	3.4	3.9	3.5	4.0	3.4	4.4	3.4	4.4
C 32 2_15.6	15.6	0.73	0.99	0.75	1.2	3.3	3.7	3.3	3.8	3.2	4.2	3.2	4.2
C 32 2_18.2	18.2	0.69	0.95	0.71	1.1	3.2	3.7	3.3	3.8	3.2	4.2	3.2	4.2
C 32 2_20.1	20.1	0.61	0.87	0.63	1.1	3.2	3.6	3.2	3.7	3.1	4.1	3.1	4.1
C 32 2_22.9	22.9	0.58	0.84	0.60	1.0	3.1	3.6	3.2	3.7	3.1	4.1	3.1	4.1
C 32 2_25.1	25.1	0.52	0.78	0.54	0.98	3.1	3.5	3.1	3.6	3.0	4.0	3.0	4.0
C 32 2_26.9	26.9	0.51	0.77	0.53	0.97	3.1	3.5	3.1	3.6	3.0	4.0	3.0	4.0
C 32 2_29.8	29.8	0.46	0.72	0.48	0.92	3.0	3.4	3.0	3.5	3.0	4.0	3.0	4.0
C 32 2_33.1	33.1	0.46	0.72	0.48	0.92	3.0	3.4	3.0	3.5	3.0	4.0	3.0	4.0
C 32 2_36.1	36.1	0.41	0.67	0.43	0.87	3.0	3.4	3.0	3.5	2.9	3.9	2.9	3.9
C 32 2_40.7	40.7	0.41	0.67	0.43	0.87	3.0	3.4	3.0	3.5	2.9	3.9	2.9	3.9
C 32 2_45.3	45.3	0.37	0.63	0.39	0.83	2.9	3.4	3.0	3.5	2.9	3.9	2.9	3.9
C 32 2_52.4	52.4	0.35	0.61	0.37	0.81	2.9	3.3	2.9	3.4	2.9	3.9	2.9	3.9
C 32 2_59.4	59.4	0.34	0.60	0.36	0.80	2.9	3.3	2.9	3.4	2.9	3.9	2.9	3.9
C 32 2_66.8	66.8	0.32	0.58	0.34	0.78	2.9	3.3	2.9	3.4	2.8	3.8	2.8	3.8
C 32 3_74.7	74.7	0.33	0.59	0.35	0.79	2.9	3.3	2.9	3.4	2.9	3.9	—	—
C 32 3_82.6	82.6	0.33	0.59	0.35	0.79	2.9	3.3	2.9	3.4	2.8	3.8	—	—
C 32 3_94.2	94.2	0.33	0.59	0.35	0.79	2.9	3.3	2.9	3.4	2.8	3.8	—	—
C 32 3_103.3	103.3	0.32	0.58	0.34	0.78	2.9	3.3	2.9	3.4	2.8	3.8	—	—
C 32 3_110.6	110.6	0.32	0.58	0.34	0.78	2.9	3.3	2.9	3.4	2.8	3.8	—	—
C 32 3_122.4	122.4	0.32	0.58	0.34	0.78	2.9	3.3	2.9	3.4	2.8	3.8	—	—
C 32 3_136.0	136.0	0.32	0.58	0.34	0.78	2.9	3.3	2.9	3.4	2.8	3.8	—	—
C 32 3_148.4	148.4	0.32	0.58	0.34	0.78	2.9	3.3	2.9	3.4	2.8	3.8	—	—
C 32 3_167.4	167.4	0.32	0.58	0.34	0.78	2.9	3.3	2.9	3.4	2.8	3.8	—	—
C 32 3_186.0	186.0	0.31	0.57	0.33	0.77	2.9	3.3	2.9	3.4	2.8	3.8	—	—
C 32 3_215.6	215.6	0.31	0.57	0.33	0.77	2.9	3.3	2.9	3.4	2.8	3.8	—	—
C 32 3_244.2	244.2	0.31	0.57	0.33	0.77	2.9	3.3	2.9	3.4	2.8	3.8	—	—
C 32 3_274.7	274.7	0.31	0.57	0.33	0.77	2.9	3.3	2.9	3.4	2.8	3.8	—	—

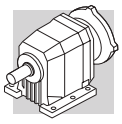

C 36

	i	J (•10-4) [kgm2]								
			IEC							
			63	71	80	90	100	112	132	
C 36 2_2.7	2.7	3.6	—	—	6.5	6.4	7.7	7.7	22	14
C 36 2_3.2	3.2	2.5	—	—	5.4	5.3	6.6	6.6	21	13
C 36 2_3.5	3.5	2.4	—	—	5.3	5.2	6.5	6.5	20	13
C 36 2_4.2	4.2	1.6	—	—	4.5	4.4	5.7	5.7	20	12
C 36 2_4.6	4.6	1.5	3.0	3.0	4.4	4.3	5.6	5.6	19	12
C 36 2_5.3	5.3	1.1	2.6	2.6	4.0	3.9	5.2	5.2	19	12
C 36 2_5.8	5.8	0.98	2.5	2.5	3.9	3.8	5.1	5.1	19	12
C 36 2_6.8	6.8	2.2	—	—	5.1	5.0	6.3	6.3	20	13
C 36 2_8.0	8.0	1.6	—	—	4.4	4.3	5.6	5.6	20	12
C 36 2_8.8	8.8	1.5	—	—	4.4	4.3	5.6	5.6	19	12
C 36 2_10.6	10.6	1.1	—	—	3.9	3.8	5.1	5.1	19	12
C 36 2_11.7	11.7	1.0	2.5	2.5	3.9	3.8	5.1	5.1	19	12
C 36 2_13.3	13.3	0.69	2.2	2.2	3.6	3.5	4.8	4.8	19	11
C 36 2_14.8	14.8	0.68	2.2	2.2	3.6	3.5	4.8	4.8	19	11
C 36 2_17.2	17.2	0.47	2.0	2.0	3.4	3.3	4.6	4.6	18	11
C 36 2_19.0	19.0	0.47	2.0	2.0	3.4	3.3	4.6	4.6	18	11
C 36 3_22.1	22.1	1.8	—	—	4.7	4.6	5.9	5.9	19	12
C 36 3_26.2	26.2	1.3	—	—	4.2	4.1	5.4	5.4	19	12
C 36 3_28.7	28.7	1.3	—	—	4.2	4.1	5.4	5.4	19	12
C 36 3_34.6	34.6	0.88	—	—	3.8	3.7	5.0	5.0	19	11
C 36 3_38.1	38.1	0.90	2.4	2.4	3.8	3.7	5.0	5.0	19	11
C 36 3_43.5	43.5	0.59	2.1	2.1	3.5	3.4	4.7	4.7	19	11
C 36 3_48.2	48.2	0.60	2.1	2.1	3.5	3.4	4.7	4.7	19	11
C 36 3_56.2	56.2	0.41	1.9	1.9	3.3	3.2	4.5	4.5	18	11
C 36 3_62.0	62.0	0.42	1.9	1.9	3.3	3.2	4.5	4.5	18	11
C 36 3_70.8	70.8	0.30	1.8	1.8	3.2	3.1	4.4	4.4	18	11
C 36 3_77.6	77.6	0.28	1.8	1.8	3.2	3.1	4.4	4.4	17	11
C 36 3_83.1	83.1	0.24	1.7	1.7	3.1	3.0	4.3	4.3	—	11
C 36 3_91.9	91.9	0.21	1.7	1.7	3.1	3.0	4.3	4.3	—	11
C 36 3_102.2	102.2	0.19	1.7	1.7	3.1	3.0	4.3	4.3	—	11
C 36 3_111.5	111.5	0.16	1.7	1.7	3.1	3.0	4.3	4.3	—	11
C 36 3_125.8	125.8	0.14	1.6	1.6	3.0	2.9	4.2	4.2	—	11
C 36 3_139.8	139.8	0.11	1.6	1.6	3.0	2.9	4.2	4.2	—	11
C 36 3_162.0	162.0	0.09	1.6	1.6	3.0	2.9	4.2	4.2	—	11
C 36 3_183.5	183.5	0.07	1.6	1.6	3.0	2.9	4.2	4.2	—	11
C 36 3_206.4	206.4	0.06	1.6	1.6	3.0	2.9	4.2	4.2	—	11
C 36 4_230.9	230.9	0.08	—	—	—	—	—	—	—	—
C 36 4_255.0	255.0	0.08	1.6	1.6	3.0	2.9	4.2	4.2	—	0.90
C 36 4_290.9	290.9	0.07	1.6	1.6	3.0	2.9	4.2	4.2	—	0.89
C 36 4_318.9	318.9	0.07	1.6	1.6	3.0	2.9	4.2	4.2	—	0.89
C 36 4_341.7	341.7	0.07	1.6	1.6	3.0	2.9	4.2	4.2	—	0.89
C 36 4_377.9	377.9	0.07	1.6	1.6	3.0	2.9	4.2	4.2	—	0.89
C 36 4_420.2	420.2	0.06	1.6	1.6	3.0	2.9	4.2	4.2	—	0.88
C 36 4_458.4	458.4	0.06	1.6	1.6	3.0	2.9	4.2	4.2	—	0.88
C 36 4_517.2	517.2	0.06	1.6	1.6	3.0	2.9	4.2	4.2	—	0.88
C 36 4_574.7	574.7	0.06	1.6	1.6	3.0	2.9	4.2	4.2	—	0.88
C 36 4_665.9	665.9	0.06	1.6	1.6	3.0	2.9	4.2	4.2	—	0.88
C 36 4_754.2	754.2	0.06	1.6	1.6	3.0	2.9	4.2	4.2	—	0.88
C 36 4_848.5	848.5	0.06	1.6	1.6	3.0	2.9	4.2	4.2	—	0.88

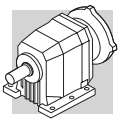

C 36

	i	J (•10-4) [kgm2]											
		SERVO											
		60A		60B 80A		95A		80C 95B 110A		95C 110B		130A	
		SK	SC	SK	SC	SK	SC	SK	SC	SK	SC	SK	SC
C 36 2_2.7	2.7	—	—	—	—	—	—	6.5	7.0	6.4	7.4	6.4	7.4
C 36 2_3.2	3.2	—	—	—	—	—	—	5.4	5.9	5.3	6.3	5.3	6.3
C 36 2_3.5	3.5	—	—	—	—	—	—	5.3	5.8	5.2	6.2	5.2	6.2
C 36 2_4.2	4.2	—	—	—	—	—	—	4.5	5.0	4.4	5.4	4.4	5.4
C 36 2_4.6	4.6	1.8	2.0	1.8	2.2	4.3	4.7	4.4	4.9	4.3	5.3	4.3	5.3
C 36 2_5.3	5.3	1.4	1.6	1.4	1.8	3.9	4.4	4.0	4.5	3.9	4.9	3.9	4.9
C 36 2_5.8	5.8	1.3	1.5	1.3	1.7	3.8	4.2	3.9	4.4	3.8	4.8	3.8	4.8
C 36 2_6.8	6.8	—	—	—	—	—	—	5.1	5.6	5.0	6.0	5.0	6.0
C 36 2_8.0	8.0	—	—	—	—	—	—	4.4	4.9	4.3	5.3	4.3	5.3
C 36 2_8.8	8.8	—	—	—	—	—	—	4.4	4.9	4.3	5.3	4.3	5.3
C 36 2_10.6	10.6	—	—	—	—	—	—	3.9	4.4	3.8	4.8	3.8	4.8
C 36 2_11.7	11.7	1.3	1.5	1.3	1.7	3.8	4.3	3.9	4.4	3.8	4.8	3.8	4.8
C 36 2_13.3	13.3	0.96	1.2	0.98	1.4	3.5	3.9	3.6	4.1	3.5	4.5	3.5	4.5
C 36 2_14.8	14.8	0.95	1.2	0.97	1.4	3.5	3.9	3.6	4.1	3.5	4.5	3.5	4.5
C 36 2_17.2	17.2	0.74	1.0	0.76	1.2	3.3	3.7	3.4	3.9	3.3	4.3	3.3	4.3
C 36 2_19.0	19.0	0.74	1.0	0.76	1.2	3.3	3.7	3.4	3.9	3.3	4.3	3.3	4.3
C 36 3_22.1	22.1	—	—	—	—	—	—	4.7	5.2	4.6	5.6	4.6	5.6
C 36 3_26.2	26.2	—	—	—	—	—	—	4.2	4.7	4.1	5.1	4.1	5.1
C 36 3_28.7	28.7	—	—	—	—	—	—	4.2	4.7	4.1	5.1	4.1	5.1
C 36 3_34.6	34.6	—	—	—	—	—	—	3.8	4.3	3.7	4.7	3.7	4.7
C 36 3_38.1	38.1	1.2	1.4	1.2	1.6	3.7	4.2	3.8	4.3	3.7	4.7	3.7	4.7
C 36 3_43.5	43.5	0.86	1.1	0.88	1.3	3.4	3.8	3.5	4.0	3.4	4.4	3.4	4.4
C 36 3_48.2	48.2	0.87	1.1	0.89	1.3	3.4	3.9	3.5	4.0	3.4	4.4	3.4	4.4
C 36 3_56.2	56.2	0.68	0.94	0.70	1.1	3.2	3.7	3.3	3.8	3.2	4.2	3.2	4.2
C 36 3_62.0	62.0	0.69	0.95	0.71	1.1	3.2	3.7	3.3	3.8	3.2	4.2	3.2	4.2
C 36 3_70.8	70.8	0.57	0.83	0.59	1.0	3.1	3.6	3.2	3.7	3.1	4.1	3.1	4.1
C 36 3_77.6	77.6	0.55	0.81	0.57	1.0	3.1	3.5	3.2	3.7	3.1	4.1	3.1	4.1
C 36 3_83.1	83.1	0.51	0.77	0.53	0.97	3.1	3.5	3.1	3.6	3.0	4.0	3.0	4.0
C 36 3_91.9	91.9	0.48	0.74	0.50	0.94	3.0	3.5	3.1	3.6	3.0	4.0	3.0	4.0
C 36 3_102.2	102.2	0.46	0.72	0.48	0.92	3.0	3.4	3.1	3.6	3.0	4.0	3.0	4.0
C 36 3_111.5	111.5	0.43	0.69	0.45	0.89	3.0	3.4	3.1	3.6	3.0	4.0	3.0	4.0
C 36 3_125.8	125.8	0.41	0.67	0.43	0.87	3.0	3.4	3.0	3.5	2.9	3.9	2.9	3.9
C 36 3_139.8	139.8	0.38	0.64	0.40	0.84	2.9	3.4	3.0	3.5	2.9	3.9	2.9	3.9
C 36 3_162.0	162.0	0.36	0.62	0.38	0.82	2.9	3.3	3.0	3.5	2.9	3.9	2.9	3.9
C 36 3_183.5	183.5	0.34	0.60	0.36	0.80	2.9	3.3	3.0	3.5	2.9	3.9	2.9	3.9
C 36 3_206.4	206.4	0.33	0.59	0.35	0.79	2.9	3.3	3.0	3.5	2.9	3.9	2.9	3.9
C 36 4_230.9	230.9	0.35	0.61	0.37	0.81	2.9	3.3	3.0	3.5	2.9	3.9	—	—
C 36 4_255.0	255.0	0.35	0.61	0.37	0.81	2.9	3.3	3.0	3.5	2.9	3.9	—	—
C 36 4_290.9	290.9	0.34	0.60	0.36	0.80	2.9	3.3	3.0	3.5	2.9	3.9	—	—
C 36 4_318.9	318.9	0.34	0.60	0.36	0.80	2.9	3.3	3.0	3.5	2.9	3.9	—	—
C 36 4_341.7	341.7	0.34	0.60	0.36	0.80	2.9	3.3	3.0	3.5	2.9	3.9	—	—
C 36 4_377.9	377.9	0.34	0.60	0.36	0.80	2.9	3.3	3.0	3.5	2.9	3.9	—	—
C 36 4_420.2	420.2	0.33	0.59	0.35	0.79	2.9	3.3	3.0	3.5	2.9	3.9	—	—
C 36 4_458.4	458.4	0.33	0.59	0.35	0.79	2.9	3.3	3.0	3.5	2.9	3.9	—	—
C 36 4_517.2	517.2	0.33	0.59	0.35	0.79	2.9	3.3	3.0	3.5	2.9	3.9	—	—
C 36 4_574.7	574.7	0.33	0.59	0.35	0.79	2.9	3.3	3.0	3.5	2.9	3.9	—	—
C 36 4_665.9	665.9	0.33	0.59	0.35	0.79	2.9	3.3	3.0	3.5	2.9	3.9	—	—
C 36 4_754.2	754.2	0.33	0.59	0.35	0.79	2.9	3.3	3.0	3.5	2.9	3.9	—	—
C 36 4_848.5	848.5	0.33	0.59	0.35	0.79	2.9	3.3	3.0	3.5	2.9	3.9	—	—

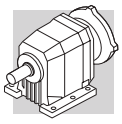

C 41

	i	J (•10-4) [kgm2]								
			IEC							
			63	71	80	90	100	112	132	
C 41 2_2.7	2.7	10	—	—	13	13	14	14	29	21
C 41 2_3.6	3.6	6.0	—	—	8.9	8.8	10	10	25	17
C 41 2_4.7	4.7	3.7	—	—	6.6	6.5	7.8	7.8	23	14
C 41 2_6.0	6.0	2.5	—	—	5.4	5.3	6.6	6.6	21	13
C 41 2_6.4	6.4	4.3	—	—	7.2	7.1	8.4	8.4	23	15
C 41 2_7.1	7.1	4.1	—	—	7.0	6.9	8.2	8.2	23	15
C 41 2_8.6	8.6	2.9	—	—	5.8	5.7	7.0	7.0	22	13
C 41 2_9.6	9.6	2.8	—	—	5.7	5.6	6.9	6.9	22	13
C 41 2_11.2	11.2	1.8	—	—	4.7	4.6	5.9	5.9	21	12
C 41 2_12.4	12.4	1.8	—	—	4.7	4.6	5.9	5.9	21	12
C 41 2_14.2	14.2	1.4	2.9	2.9	4.3	4.2	5.5	5.5	20	12
C 41 2_15.8	15.8	1.3	2.8	2.8	4.2	4.1	5.4	5.4	20	12
C 41 2_17.8	17.8	1.0	2.5	2.5	3.9	3.8	5.1	5.1	20	12
C 41 2_19.8	19.8	0.98	2.5	2.5	3.9	3.8	5.1	5.1	20	12
C 41 2_22.6	22.6	0.60	2.1	2.1	3.5	3.4	4.7	4.7	20	11
C 41 2_25.0	25.0	0.60	2.1	2.1	3.5	3.4	4.7	4.7	20	11
C 41 2_28.3	28.3	0.44	1.9	1.9	3.3	3.2	4.5	4.5	19	11
C 41 2_31.4	31.4	0.43	1.9	1.9	3.3	3.2	4.5	4.5	19	11
C 41 2_33.4	33.4	0.34	1.8	1.8	3.2	3.1	4.4	4.4	—	11
C 41 2_37.1	37.1	0.33	1.8	1.8	3.2	3.1	4.4	4.4	—	11
C 41 2_44.8	44.8	0.27	1.8	1.8	3.2	3.1	4.4	4.4	—	11
C 41 3_28.5	28.5	2.5	—	—	5.4	5.3	6.6	6.6	21	13
C 41 3_31.2	31.2	2.5	—	—	5.4	5.3	6.6	6.6	21	13
C 41 3_36.8	36.8	1.6	—	—	4.5	4.4	5.7	5.7	21	12
C 41 3_40.3	40.3	1.6	—	—	4.5	4.4	5.7	5.7	21	12
C 41 3_47.0	47.0	1.2	2.7	2.7	4.1	4.0	5.3	5.3	20	12
C 41 3_51.5	51.5	1.2	2.7	2.7	4.1	4.0	5.3	5.3	20	12
C 41 3_58.7	58.7	0.90	2.4	2.4	3.8	3.7	5.0	5.0	20	11
C 41 3_64.3	64.3	0.90	2.4	2.4	3.8	3.7	5.0	5.0	20	11
C 41 3_74.4	74.4	0.60	2.1	2.1	3.5	3.4	4.7	4.7	20	11
C 41 3_81.5	81.5	0.60	2.1	2.1	3.5	3.4	4.7	4.7	20	11
C 41 3_93.9	93.9	0.40	1.9	1.9	3.3	3.2	4.5	4.5	19	11
C 41 3_102.3	102.3	0.40	1.9	1.9	3.3	3.2	4.5	4.5	19	11
C 41 3_110.1	110.1	0.30	1.8	1.8	3.2	3.1	4.4	4.4	—	11
C 41 3_120.6	120.6	0.30	1.8	1.8	3.2	3.1	4.4	4.4	—	11
C 41 3_132.9	132.9	0.30	1.8	1.8	3.2	3.1	4.4	4.4	—	11
C 41 3_145.6	145.6	0.30	1.8	1.8	3.2	3.1	4.4	4.4	—	11
C 41 3_164.1	164.1	0.20	1.7	1.7	3.1	3.0	4.3	4.3	—	11
C 41 3_179.9	179.9	0.20	1.7	1.7	3.1	3.0	4.3	4.3	—	11
C 41 3_190.8	190.8	0.10	1.6	1.6	3.0	2.9	4.2	4.2	—	11
C 41 3_209.1	209.1	0.10	1.6	1.6	3.0	2.9	4.2	4.2	—	11
C 41 4_239.9	239.9	0.15	1.7	1.7	3.1	3.0	4.3	4.3	—	2.1
C 41 4_263.0	263.0	0.15	1.7	1.7	3.1	3.0	4.3	4.3	—	2.1
C 41 4_304.2	304.2	0.13	1.6	1.6	3.0	2.9	4.2	4.2	—	2.0
C 41 4_333.4	333.4	0.13	1.6	1.6	3.0	2.9	4.2	4.2	—	2.0
C 41 4_382.0	382.0	0.12	1.6	1.6	3.0	2.9	4.2	4.2	—	2.0
C 41 4_419.0	419.0	0.12	1.6	1.6	3.0	2.9	4.2	4.2	—	2.0
C 41 4_450.2	450.2	0.12	1.6	1.6	3.0	2.9	4.2	4.2	—	2.0
C 41 4_493.5	493.5	0.12	1.6	1.6	3.0	2.9	4.2	4.2	—	2.0
C 41 4_543.5	543.5	0.12	1.6	1.6	3.0	2.9	4.2	4.2	—	2.0
C 41 4_595.8	595.8	0.12	1.6	1.6	3.0	2.9	4.2	4.2	—	2.0
C 41 4_671.3	671.3	0.10	1.6	1.6	3.0	2.9	4.2	4.2	—	2.0
C 41 4_735.9	735.9	0.10	1.6	1.6	3.0	2.9	4.2	4.2	—	2.0
C 41 4_780.4	780.4	0.10	1.6	1.6	3.0	2.9	4.2	4.2	—	2.0
C 41 4_855.5	855.5	0.10	1.6	1.6	3.0	2.9	4.2	4.2	—	2.0

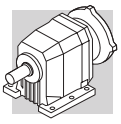

C 41

	i	J (•10-4) [kgm2]																	
		SERVO																	
		60A		60B 80A		80B		95A		80C 95B 110A		95C 110B		130A		130B 180A		180B	
		SK	SC	SK	SC	SK	SC	SK	SC	SK	SC	SK	SC	SK	SC	SK	SC	SK	SC
C 41 2_2.7	2.7	—	—	—	—	—	—	—	—	13	14	13	14	13	14	27	29	29	34
C 41 2_3.6	3.6	—	—	—	—	—	—	—	—	8.9	9.4	8.8	9.8	8.8	9.8	23	25	25	30
C 41 2_4.7	4.7	—	—	—	—	—	—	—	—	6.6	7.1	6.5	7.5	6.5	7.5	21	23	23	28
C 41 2_6.0	6.0	—	—	—	—	5.3	5.8	5.3	5.8	5.4	5.9	5.3	6.3	5.3	6.3	19	22	21	26
C 41 2_6.4	6.4	—	—	—	—	—	—	—	—	7.2	7.7	7.1	8.1	7.1	8.1	21	24	23	28
C 41 2_7.1	7.1	—	—	—	—	—	—	—	—	7.0	7.5	6.9	7.9	6.9	7.9	21	24	23	28
C 41 2_8.6	8.6	—	—	—	—	—	—	—	—	5.8	6.3	5.7	6.7	5.7	6.7	20	22	22	27
C 41 2_9.6	9.6	—	—	—	—	—	—	—	—	5.7	6.2	5.6	6.6	5.6	6.6	20	22	22	27
C 41 2_11.2	11.2	—	—	—	—	—	—	—	—	4.7	5.2	4.6	5.6	4.6	5.6	19	21	21	26
C 41 2_12.4	12.4	—	—	—	—	—	—	—	—	4.7	5.2	4.6	5.6	4.6	5.6	19	21	21	26
C 41 2_14.2	14.2	—	—	—	—	4.2	4.7	4.2	4.7	4.3	4.8	4.2	5.2	4.2	5.2	18	21	20	25
C 41 2_15.8	15.8	—	—	—	—	4.1	4.6	4.1	4.6	4.2	4.7	4.1	5.1	4.1	5.1	18	21	20	25
C 41 2_17.8	17.8	—	—	—	—	3.8	5.3	3.8	5.3	3.9	4.4	3.8	4.8	3.8	4.8	18	20	20	25
C 41 2_19.8	19.8	—	—	—	—	3.8	4.2	3.8	4.2	3.9	4.4	3.8	4.8	3.8	4.8	18	20	20	25
C 41 2_22.6	22.6	—	—	—	—	3.4	3.9	3.4	3.9	3.5	4.0	3.4	4.4	3.4	4.4	18	20	20	25
C 41 2_25.0	25.0	—	—	—	—	3.4	3.9	3.4	3.9	3.5	4.0	3.4	4.4	3.4	4.4	18	20	20	25
C 41 2_28.3	28.3	—	—	—	—	3.3	3.7	3.3	3.7	3.3	3.8	3.2	4.2	3.2	4.2	17	20	19	24
C 41 2_31.4	31.4	—	—	—	—	3.3	3.7	3.3	3.7	3.3	3.8	3.2	4.2	3.2	4.2	17	20	19	24
C 41 2_33.4	33.4	—	—	—	—	3.2	3.6	3.2	3.6	3.2	3.7	3.1	4.1	3.1	4.1	—	—	—	—
C 41 2_37.1	37.1	—	—	—	—	3.2	3.6	3.2	3.6	3.2	3.7	3.1	4.1	3.1	4.1	—	—	—	—
C 41 2_44.8	44.8	—	—	—	—	3.1	3.5	3.1	3.5	3.2	3.7	3.1	4.1	3.1	4.1	—	—	—	—
C 41 3_28.5	28.5	—	—	—	—	—	—	—	—	5.4	5.9	5.3	6.3	5.3	6.3	19	22	21	26
C 41 3_31.2	31.2	—	—	—	—	—	—	—	—	5.4	5.9	5.3	6.3	5.3	6.3	19	22	21	26
C 41 3_36.8	36.8	—	—	—	—	—	—	—	—	4.5	5.0	4.4	5.4	4.4	5.4	19	21	21	26
C 41 3_40.3	40.3	—	—	—	—	—	—	—	—	4.5	5.0	4.4	5.4	4.4	5.4	19	21	21	26
C 41 3_47.0	47.0	—	—	—	—	4.0	4.5	4.0	4.5	4.1	4.6	4.0	5.0	4.0	5.0	18	21	20	25
C 41 3_51.5	51.5	—	—	—	—	4.0	4.5	4.0	4.5	4.1	4.6	4.0	5.0	4.0	5.0	18	21	20	25
C 41 3_58.7	58.7	—	—	—	—	3.7	4.2	3.7	4.2	3.8	4.3	3.7	4.7	3.7	4.7	18	20	20	25
C 41 3_64.3	64.3	—	—	—	—	3.7	4.2	3.7	4.2	3.8	4.3	3.7	4.7	3.7	4.7	18	20	20	25
C 41 3_74.4	74.4	—	—	—	—	3.4	3.9	3.4	3.9	3.5	4.0	3.4	4.4	3.4	4.4	18	20	20	25
C 41 3_81.5	81.5	—	—	—	—	3.4	3.9	3.4	3.9	3.5	4.0	3.4	4.4	3.4	4.4	18	20	20	25
C 41 3_93.9	93.9	—	—	—	—	3.2	3.7	3.2	3.7	3.3	3.8	3.2	4.2	3.2	4.2	17	20	19	24
C 41 3_102.3	102.3	—	—	—	—	3.2	3.7	3.2	3.7	3.3	3.8	3.2	4.2	3.2	4.2	17	20	19	24
C 41 3_110.1	110.1	—	—	—	—	3.1	3.6	3.1	3.6	3.2	3.7	3.1	4.1	3.1	4.1	—	—	—	—
C 41 3_120.6	120.6	—	—	—	—	3.1	3.6	3.1	3.6	3.2	3.7	3.1	4.1	3.1	4.1	—	—	—	—
C 41 3_132.9	132.9	—	—	—	—	3.1	3.6	3.1	3.6	3.2	3.7	3.1	4.1	3.1	4.1	—	—	—	—
C 41 3_145.6	145.6	—	—	—	—	3.1	3.6	3.1	3.6	3.2	3.7	3.1	4.1	3.1	4.1	—	—	—	—
C 41 3_164.1	164.1	—	—	—	—	3.0	3.5	3.0	3.5	3.1	3.6	3.0	4.0	3.0	4.0	—	—	—	—
C 41 3_179.9	179.9	—	—	—	—	3.0	3.5	3.0	3.5	3.1	3.6	3.0	4.0	3.0	4.0	—	—	—	—
C 41 3_190.8	190.8	—	—	—	—	2.9	3.4	2.9	3.4	3.0	3.5	2.9	3.9	2.9	3.9	—	—	—	—
C 41 3_209.1	209.1	—	—	—	—	2.9	3.4	2.9	3.4	3.0	3.5	2.9	3.9	2.9	3.9	—	—	—	—
C 41 4_239.9	239.9	0.42	0.68	0.44	0.88	—	—	3.0	3.4	3.1	3.6	3.0	4.0	—	—	—	—	—	—
C 41 4_263.0	263.0	0.42	0.68	0.44	0.88	—	—	3.0	3.4	3.1	3.6	3.0	4.0	—	—	—	—	—	—
C 41 4_304.2	304.2	0.40	0.66	0.42	0.86	—	—	3.0	3.4	3.0	3.5	2.9	3.9	—	—	—	—	—	—
C 41 4_333.4	333.4	0.40	0.66	0.42	0.86	—	—	3.0	3.4	3.0	3.5	2.9	3.9	—	—	—	—	—	—
C 41 4_382.0	382.0	0.39	0.65	0.41	0.85	—	—	2.9	3.4	3.0	3.5	2.9	3.9	—	—	—	—	—	—
C 41 4_419.0	419.0	0.39	0.65	0.41	0.85	—	—	2.9	3.4	3.0	3.5	2.9	3.9	—	—	—	—	—	—
C 41 4_450.2	450.2	0.39	0.65	0.41	0.85	—	—	2.9	3.4	3.0	3.5	2.9	3.9	—	—	—	—	—	—
C 41 4_493.5	493.5	0.39	0.65	0.41	0.85	—	—	2.9	3.4	3.0	3.5	2.9	3.9	—	—	—	—	—	—
C 41 4_543.5	543.5	0.39	0.65	0.41	0.85	—	—	2.9	3.4	3.0	3.5	2.9	3.9	—	—	—	—	—	—
C 41 4_595.8	595.8	0.39	0.65	0.41	0.85	—	—	2.9	3.4	3.0	3.5	2.9	3.9	—	—	—	—	—	—
C 41 4_671.3	671.3	0.37	0.63	0.39	0.83	—	—	2.9	3.4	3.0	3.5	2.9	3.9	—	—	—	—	—	—
C 41 4_735.9	735.9	0.37	0.63	0.39	0.83	—	—	2.9	3.4	3.0	3.5	2.9	3.9	—	—	—	—	—	—
C 41 4_780.4	780.4	0.37	0.63	0.39	0.83	—	—	2.9	3.4	3.0	3.5	2.9	3.9	—	—	—	—	—	—
C 41 4_855.5	855.5	0.37	0.63	0.39	0.83	—	—	2.9	3.4	3.0	3.5	2.9	3.9	—	—	—	—	—	—

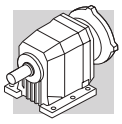

C 51

	i	J (•10-4) [kgm2]										
			IEC									
			63	71	80	90	100	112	132	160	180	
C 51 2_2.6	2.6	15	—	—	17	17	19	19	33	79	76	25
C 51 2_3.3	3.3	10	—	—	13	13	14	14	29	75	72	21
C 51 2_4.5	4.5	6.3	—	—	9.2	9.1	10	10	25	71	68	17
C 51 2_5.6	5.6	4.1	—	—	7.0	6.9	8.2	8.2	23	69	66	15
C 51 2_7.0	7.0	8.1	—	—	11	11	12	12	27	73	70	19
C 51 2_7.8	7.8	7.8	—	—	11	11	12	12	27	73	70	18
C 51 2_8.8	8.8	6.0	—	—	8.9	8.8	10	10	25	71	68	17
C 51 2_9.8	9.8	5.8	—	—	8.7	8.6	9.9	9.9	25	71	68	16
C 51 2_11.8	11.8	4.1	—	—	7.0	6.9	8.2	8.2	23	69	66	15
C 51 2_13.1	13.1	4.0	—	—	6.9	6.8	8.1	8.1	23	69	66	15
C 51 2_15.0	15.0	2.7	—	—	5.6	5.5	6.8	6.8	22	68	65	13
C 51 2_16.6	16.6	2.6	—	—	5.5	5.4	6.7	6.7	22	68	65	13
C 51 2_18.9	18.9	2.0	3.5	3.5	4.9	4.8	6.1	6.1	21	67	64	13
C 51 2_21.0	21.0	1.9	3.4	3.4	4.8	4.7	6.0	6.0	21	67	64	12
C 51 2_23.4	23.4	1.5	3.0	3.0	4.4	4.3	5.6	5.6	20	66	63	12
C 51 2_25.9	25.9	1.4	2.9	2.9	4.3	4.2	5.5	5.5	20	66	63	12
C 51 2_29.8	29.8	0.90	2.4	2.4	3.8	3.7	5.0	5.0	20	66	63	11
C 51 2_33.0	33.0	0.90	2.4	2.4	3.8	3.7	5.0	5.0	20	66	63	11
C 51 2_36.4	36.4	0.70	2.2	2.2	3.6	3.5	4.8	4.8	20	66	63	11
C 51 2_40.4	40.4	0.70	2.2	2.2	3.6	3.5	4.8	4.8	20	66	63	11
C 51 2_43.1	43.1	0.50	2.0	2.0	3.4	3.3	4.6	4.6	—	—	—	11
C 51 2_47.8	47.8	0.50	2.0	2.0	3.4	3.3	4.6	4.6	—	—	—	11
C 51 2_51.4	51.4	0.40	1.9	1.9	3.3	3.2	4.5	4.5	—	—	—	11
C 51 2_57.0	57.0	0.40	1.9	1.9	3.3	3.2	4.5	4.5	—	—	—	11
C 51 3_21.8	21.8	6.8	—	—	9.7	9.6	11	11	26	72	69	17
C 51 3_23.9	23.9	6.8	—	—	9.7	9.6	11	11	26	72	69	17
C 51 3_27.4	27.4	5.2	—	—	8.1	8.0	9.3	9.3	24	70	67	16
C 51 3_30.1	30.1	5.2	—	—	8.1	8.0	9.3	9.3	24	70	67	16
C 51 3_37.0	37.0	3.6	—	—	6.5	6.4	7.7	7.7	23	69	66	14
C 51 3_40.5	40.5	3.6	—	—	6.5	6.4	7.7	7.7	23	69	66	14
C 51 3_46.7	46.7	2.4	—	—	5.3	5.2	6.5	6.5	21	67	64	13
C 51 3_51.2	51.2	2.4	—	—	5.3	5.2	6.5	6.5	21	67	64	13
C 51 3_59.0	59.0	1.8	3.3	3.3	4.7	4.6	5.9	5.9	21	67	64	12
C 51 3_64.6	64.6	1.8	3.3	3.3	4.7	4.6	5.9	5.9	21	67	64	12
C 51 3_72.9	72.9	1.3	2.8	2.8	4.2	4.1	5.4	5.4	20	66	63	12
C 51 3_79.9	79.9	1.3	2.8	2.8	4.2	4.1	5.4	5.4	20	66	63	12
C 51 3_93.0	93.0	0.80	2.3	2.3	3.7	3.6	4.9	4.9	20	66	63	11
C 51 3_101.8	101.8	0.80	2.3	2.3	3.7	3.6	4.9	4.9	20	66	63	11
C 51 3_113.6	113.6	0.60	2.1	2.1	3.5	3.4	4.7	4.7	20	66	63	11
C 51 3_124.4	124.4	0.60	2.1	2.1	3.5	3.4	4.7	4.7	20	66	63	11
C 51 3_134.6	134.6	0.50	2.0	2.0	3.4	3.3	4.6	4.6	—	—	—	11
C 51 3_147.4	147.4	0.50	2.0	2.0	3.4	3.3	4.6	4.6	—	—	—	11
C 51 3_160.5	160.5	0.40	1.9	1.9	3.3	3.2	4.5	4.5	—	—	—	11
C 51 3_175.8	175.8	0.40	1.9	1.9	3.3	3.2	4.5	4.5	—	—	—	11
C 51 3_197.9	197.9	0.30	1.8	1.8	3.2	3.1	4.4	4.4	—	—	—	11
C 51 3_216.7	216.7	0.30	1.8	1.8	3.2	3.1	4.4	4.4	—	—	—	11
C 51 4_240.9	240.9	0.30	1.8	1.8	3.2	3.1	4.4	4.4	—	—	—	1.2
C 51 4_263.8	263.8	0.30	1.8	1.8	3.2	3.1	4.4	4.4	—	—	—	1.2
C 51 4_297.8	297.8	0.30	1.8	1.8	3.2	3.1	4.4	4.4	—	—	—	1.2
C 51 4_326.1	326.1	0.30	1.8	1.8	3.2	3.1	4.4	4.4	—	—	—	1.2
C 51 4_380.0	380.0	0.20	1.7	1.7	3.1	3.0	4.3	4.3	—	—	—	1.1
C 51 4_416.0	416.0	0.20	1.7	1.7	3.1	3.0	4.3	4.3	—	—	—	1.1
C 51 4_463.9	463.9	0.20	1.7	1.7	3.1	3.0	4.3	4.3	—	—	—	1.1
C 51 4_508.0	508.0	0.20	1.7	1.7	3.1	3.0	4.3	4.3	—	—	—	1.1
C 51 4_549.7	549.7	0.20	1.7	1.7	3.1	3.0	4.3	4.3	—	—	—	1.1
C 51 4_602.0	602.0	0.20	1.7	1.7	3.1	3.0	4.3	4.3	—	—	—	1.1
C 51 4_655.4	655.4	0.20	1.7	1.7	3.1	3.0	4.3	4.3	—	—	—	1.1
C 51 4_717.7	717.7	0.20	1.7	1.7	3.1	3.0	4.3	4.3	—	—	—	1.1
C 51 4_808.0	808.0	0.20	1.7	1.7	3.1	3.0	4.3	4.3	—	—	—	1.1
C 51 4_884.9	884.9	0.20	1.7	1.7	3.1	3.0	4.3	4.3	—	—	—	1.1

Bonfiglioli Riduttori

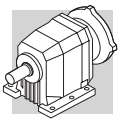

C 51

	i	J (•10-4) [kgm2]											
		SERVO											
		80B		95A		80C 95B 110A		95C 110B 130A		130B 180A		180B	
		SK	SC	SK	SC	SK	SC	SK	SC	SK	SC	SK	SC
C 51 2_2.6	2.6	—	—	—	—	17	18	17	18	32	34	33	38
C 51 2_3.3	3.3	—	—	—	—	13	14	13	14	27	29	29	34
C 51 2_4.5	4.5	—	—	—	—	9.2	9.7	9.1	10	23	26	25	30
C 51 2_5.6	5.6	—	—	—	—	7.0	7.5	6.9	7.9	21	24	23	28
C 51 2_7.0	7.0	—	—	—	—	11	12	11	12	25	28	27	32
C 51 2_7.8	7.8	—	—	—	—	11	12	11	12	25	27	27	32
C 51 2_8.8	8.8	—	—	—	—	8.9	9.4	8.8	9.8	23	25	25	30
C 51 2_9.8	9.8	—	—	—	—	8.7	9.2	8.6	9.6	23	25	25	30
C 51 2_11.8	11.8	—	—	—	—	7.0	7.5	6.9	7.9	21	24	23	28
C 51 2_13.1	13.1	—	—	—	—	6.9	7.4	6.8	7.8	21	23	23	28
C 51 2_15.0	15.0	—	—	—	—	5.6	6.1	5.5	6.5	20	22	22	27
C 51 2_16.6	16.6	—	—	—	—	5.5	6.0	5.4	6.4	20	22	22	27
C 51 2_18.9	18.9	4.8	5.3	4.8	5.3	4.9	5.4	4.8	5.8	19	21	21	26
C 51 2_21.0	21.0	4.7	5.2	4.7	5.2	4.8	5.3	4.7	5.7	19	21	21	26
C 51 2_23.4	23.4	4.3	4.8	4.3	4.8	4.4	4.3	4.3	5.3	18	21	20	25
C 51 2_25.9	25.9	4.2	4.7	4.2	4.7	4.3	4.8	4.2	5.2	18	21	20	25
C 51 2_29.8	29.8	3.7	4.2	3.7	4.2	3.8	4.3	3.7	4.7	18	20	20	25
C 51 2_33.0	33.0	3.7	4.2	3.7	4.2	3.8	4.3	3.7	4.7	18	20	20	25
C 51 2_36.4	36.4	3.5	4.0	3.5	4.0	3.6	4.1	3.5	4.5	18	20	20	25
C 51 2_40.4	40.4	3.5	4.0	3.5	4.0	3.6	4.1	3.5	4.5	18	20	20	25
C 51 2_43.1	43.1	3.3	3.8	3.3	3.8	3.4	3.9	3.3	4.3	—	—	—	—
C 51 2_47.8	47.8	3.3	3.8	3.3	3.8	3.4	3.9	3.3	4.3	—	—	—	—
C 51 2_51.4	51.4	3.2	3.7	3.2	3.7	3.3	3.8	3.2	4.2	—	—	—	—
C 51 2_57.0	57.0	3.2	3.7	3.2	3.7	3.3	3.8	3.2	4.2	—	—	—	—
C 51 3_21.8	21.8	—	—	—	—	9.7	10	9.6	11	24	26	26	31
C 51 3_23.9	23.9	—	—	—	—	9.7	10	9.6	11	24	26	26	31
C 51 3_27.4	27.4	—	—	—	—	8.1	8.6	8.0	9.0	22	25	24	29
C 51 3_30.1	30.1	—	—	—	—	8.1	8.6	8.0	9.0	22	25	24	29
C 51 3_37.0	37.0	—	—	—	—	6.5	7.0	6.4	7.4	21	23	23	28
C 51 3_40.5	40.5	—	—	—	—	6.5	7.0	6.4	7.4	21	23	23	28
C 51 3_46.7	46.7	—	—	—	—	5.3	5.8	5.2	6.2	19	22	21	26
C 51 3_51.2	51.2	—	—	—	—	5.3	5.8	5.2	6.2	19	22	21	26
C 51 3_59.0	59.0	4.6	5.1	4.6	5.1	4.7	5.2	4.6	5.6	19	21	21	26
C 51 3_64.6	64.6	4.6	5.1	4.6	5.1	4.7	5.2	4.6	5.6	19	21	21	26
C 51 3_72.9	72.9	4.1	4.6	4.1	4.6	4.2	5.2	4.1	5.1	18	21	20	25
C 51 3_79.9	79.9	4.1	4.6	4.1	4.6	4.2	5.2	4.1	5.1	18	21	20	25
C 51 3_93.0	93.0	3.6	4.1	3.6	4.1	3.7	4.2	3.6	4.6	18	20	20	25
C 51 3_101.8	101.8	3.6	4.1	3.6	4.1	3.7	4.2	3.6	4.6	18	20	20	25
C 51 3_113.6	113.6	3.4	3.9	3.4	3.9	3.5	4.0	3.4	4.4	18	20	20	25
C 51 3_124.4	124.4	3.4	3.9	3.4	3.9	3.5	4.0	3.4	4.4	18	20	20	25
C 51 3_134.6	134.6	3.3	3.8	3.3	3.8	3.4	3.9	3.3	4.3	—	—	—	—
C 51 3_147.4	147.4	3.3	3.8	3.3	3.8	3.4	3.9	3.3	4.3	—	—	—	—
C 51 3_160.5	160.5	3.2	3.7	3.2	3.7	3.3	3.8	3.2	4.2	—	—	—	—
C 51 3_175.8	175.8	3.2	3.7	3.2	3.7	3.3	3.8	3.2	4.2	—	—	—	—
C 51 3_197.9	197.9	3.1	3.6	3.1	3.6	3.2	3.7	3.1	4.1	—	—	—	—
C 51 3_216.7	216.7	3.1	3.6	3.1	3.6	3.2	3.7	3.1	4.1	—	—	—	—
C 51 4_240.9	240.9	—	—	3.1	3.6	3.2	3.7	3.1	4.1	—	—	—	—
C 51 4_263.8	263.8	—	—	3.1	3.6	3.2	3.7	3.1	4.1	—	—	—	—
C 51 4_297.8	297.8	—	—	3.1	3.6	3.2	3.7	3.1	4.1	—	—	—	—
C 51 4_326.1	326.1	—	—	3.1	3.6	3.2	3.7	3.1	4.1	—	—	—	—
C 51 4_380.0	380.0	—	—	3.0	3.5	3.1	3.6	3.0	4.0	—	—	—	—
C 51 4_416.0	416.0	—	—	3.0	3.5	3.1	3.6	3.0	4.0	—	—	—	—
C 51 4_463.9	463.9	—	—	3.0	3.5	3.1	3.6	3.0	4.0	—	—	—	—
C 51 4_508.0	508.0	—	—	3.0	3.5	3.1	3.6	3.0	4.0	—	—	—	—
C 51 4_549.7	549.7	—	—	3.0	3.5	3.1	3.6	3.0	4.0	—	—	—	—
C 51 4_602.0	602.0	—	—	3.0	3.5	3.1	3.6	3.0	4.0	—	—	—	—
C 51 4_655.4	655.4	—	—	3.0	3.5	3.1	3.6	3.0	4.0	—	—	—	—
C 51 4_717.7	717.7	—	—	3.0	3.5	3.1	3.6	3.0	4.0	—	—	—	—
C 51 4_808.0	808.0	—	—	3.0	3.5	3.1	3.6	3.0	4.0	—	—	—	—
C 51 4_884.9	884.9	—	—	3.0	3.5	3.1	3.6	3.0	4.0	—	—	—	—

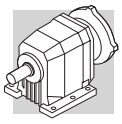

C 61

	i	J (•10-4) [kgm2]										
			IEC									
			63	71	80	90	100	112	132	160	180	
C 61 2_2.8	2.8	30	—	—	—	—	—	—	49	78	76	52
C 61 2_3.7	3.7	19	—	—	22	22	23	23	38	78	76	41
C 61 2_4.6	4.6	14	—	—	17	17	18	18	33	78	76	36
C 61 2_6.0	6.0	8.8	—	—	12	12	13	13	28	78	76	31
C 61 2_6.7	6.7	14	—	—	—	—	—	—	33	78	76	36
C 61 2_7.5	7.5	13	—	—	—	—	—	—	32	78	76	35
C 61 2_8.8	8.8	13	—	—	16	16	17	17	32	78	76	35
C 61 2_9.8	9.8	12	—	—	15	15	16	16	31	78	76	34
C 61 2_10.9	10.9	9.6	—	—	13	12	14	14	29	78	76	31
C 61 2_12.1	12.1	9.2	—	—	12	12	13	13	28	78	76	31
C 61 2_14.3	14.3	5.8	—	—	8.7	8.6	9.9	9.9	25	78	76	28
C 61 2_15.9	15.9	5.6	—	—	8.5	8.4	9.7	9.7	25	78	76	27
C 61 2_17.7	17.7	4.4	—	—	7.3	7.2	8.5	8.5	23	78	76	26
C 61 2_19.6	19.6	4.3	—	—	7.2	7.1	8.4	8.4	23	78	76	26
C 61 2_22.4	22.4	3.2	4.7	4.7	6.1	6.0	7.3	7.3	22	78	76	25
C 61 2_24.8	24.8	3.1	4.6	4.6	6.0	5.9	7.2	7.2	22	78	76	25
C 61 2_27.4	27.4	2.1	3.6	3.6	5.0	4.9	6.2	6.2	21	78	76	24
C 61 2_30.4	30.4	2.2	3.7	3.7	5.1	5.0	6.3	6.3	21	78	76	24
C 61 2_34.2	34.2	1.5	3.0	3.0	4.4	4.3	5.6	5.6	20	78	76	23
C 61 2_38.0	38.0	1.5	3.0	3.0	4.4	4.3	5.6	5.6	20	78	76	23
C 61 3_26.8	26.8	10	—	—	13	13	14	14	29	78	76	32
C 61 3_29.4	29.4	10	—	—	13	13	14	14	29	78	76	32
C 61 3_33.0	33.0	8.1	—	—	11	11	12	12	27	78	76	30
C 61 3_36.1	36.1	8.1	—	—	11	11	12	12	27	78	76	30
C 61 3_43.4	43.4	5.0	—	—	7.9	7.8	9.1	9.1	24	78	76	27
C 61 3_47.6	47.6	5.0	—	—	7.9	7.8	9.1	9.1	24	78	76	27
C 61 3_53.5	53.5	3.9	—	—	6.8	6.7	8.0	8.0	23	78	76	26
C 61 3_58.6	58.6	3.8	—	—	6.7	6.6	7.9	7.9	23	78	76	26
C 61 3_67.7	67.7	2.8	4.3	4.3	5.7	5.6	6.9	6.9	22	78	76	25
C 61 3_74.2	74.2	2.8	4.3	4.3	5.7	5.6	6.9	6.9	22	78	76	25
C 61 3_83.0	83.0	1.9	3.4	3.4	4.8	4.7	6.0	6.0	21	78	76	24
C 61 3_91.0	91.0	1.9	3.4	3.4	4.8	4.7	6.0	6.0	21	78	76	24
C 61 3_103.6	103.6	1.3	2.8	2.8	4.2	4.1	5.4	5.4	20	78	76	23
C 61 3_113.6	113.6	1.3	2.8	2.8	4.2	4.1	5.4	5.4	20	78	76	23
C 61 3_128.1	128.1	1.0	2.5	2.5	3.9	3.8	5.1	5.1	20	78	76	23
C 61 3_140.5	140.5	1.0	2.5	2.5	3.9	3.8	5.1	5.1	20	78	76	23
C 61 3_150.0	150.0	0.70	2.2	2.2	3.6	3.5	4.8	4.8	—	—	—	23
C 61 3_164.5	164.5	0.70	2.2	2.2	3.6	3.5	4.8	4.8	—	—	—	23
C 61 3_178.6	178.6	0.60	2.1	2.1	3.5	3.4	4.7	4.7	—	—	—	22
C 61 3_195.8	195.8	0.60	2.1	2.1	3.5	3.4	4.7	4.7	—	—	—	22
C 61 4_217.4	217.4	0.67	2.2	2.2	3.6	3.5	4.8	4.8	—	—	—	11
C 61 4_238.3	238.3	0.67	2.2	2.2	3.6	3.5	4.8	4.8	—	—	—	11
C 61 4_275.3	275.3	0.81	2.3	2.3	3.7	3.6	4.9	4.9	—	—	—	11
C 61 4_301.7	301.7	0.81	2.3	2.3	3.7	3.6	4.9	4.9	—	—	—	11
C 61 4_337.7	337.7	0.56	2.1	2.1	3.5	3.4	4.7	4.7	—	—	—	11
C 61 4_370.1	370.1	0.56	2.1	2.1	3.5	3.4	4.7	4.7	—	—	—	11
C 61 4_421.5	421.5	0.53	2.0	2.0	3.4	3.3	4.6	4.6	—	—	—	11
C 61 4_462.0	462.0	0.53	2.0	2.0	3.4	3.3	4.6	4.6	—	—	—	11
C 61 4_521.1	521.1	0.51	2.0	2.0	3.4	3.3	4.6	4.6	—	—	—	11
C 61 4_571.2	571.2	0.51	2.0	2.0	3.4	3.3	4.6	4.6	—	—	—	11
C 61 4_610.1	610.1	0.49	2.0	2.0	3.4	3.3	4.6	4.6	—	—	—	11
C 61 4_668.8	668.8	0.49	2.0	2.0	3.4	3.3	4.6	4.6	—	—	—	11
C 61 4_726.3	726.3	0.48	2.0	2.0	3.4	3.3	4.6	4.6	—	—	—	11
C 61 4_796.1	796.1	0.48	2.0	2.0	3.4	3.3	4.6	4.6	—	—	—	11

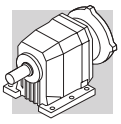

C 61

	i	J (•10-4) [kgm2]											
		SERVO											
		80B		95A		80C 95B 110A		95C 110B 130A		130B 180A		180B	
		SK	SC	SK	SC	SK	SC	SK	SC	SK	SC	SK	SC
C 61 2_2.8	2.8	—	—	—	—	—	—	—	—	47	49	49	54
C 61 2_3.7	3.7	—	—	—	—	22	23	22	23	36	38	38	43
C 61 2_4.6	4.6	—	—	—	—	17	18	17	18	31	33	33	38
C 61 2_6.0	6.0	—	—	—	—	12	13	12	13	26	28	28	33
C 61 2_6.7	6.7	—	—	—	—	—	—	—	—	31	33	33	38
C 61 2_7.5	7.5	—	—	—	—	—	—	—	—	30	32	32	37
C 61 2_8.8	8.8	—	—	—	—	16	17	16	17	30	32	32	37
C 61 2_9.8	9.8	—	—	—	—	15	16	15	16	23	31	31	36
C 61 2_10.9	10.9	—	—	—	—	13	14	12	13	27	29	29	34
C 61 2_12.1	12.1	—	—	—	—	12	13	12	13	26	29	28	33
C 61 2_14.3	14.3	—	—	—	—	8.7	9.2	8.6	9.6	23	25	25	30
C 61 2_15.9	15.9	—	—	—	—	8.5	9.0	8.4	9.4	23	25	25	30
C 61 2_17.7	17.7	—	—	—	—	7.3	7.8	7.2	8.2	21	24	23	28
C 61 2_19.6	19.6	—	—	—	—	7.2	7.7	7.1	8.1	21	24	23	28
C 61 2_22.4	22.4	—	—	6.0	6.5	6.1	6.6	6.0	7.0	20	23	22	27
C 61 2_24.8	24.8	—	—	5.9	6.4	6.0	6.5	5.9	6.9	20	23	22	27
C 61 2_27.4	27.4	—	—	4.9	5.4	5.0	5.5	4.9	5.9	19	22	21	26
C 61 2_30.4	30.4	—	—	5.0	5.5	5.1	5.6	5.0	6.0	19	22	21	26
C 61 2_34.2	34.2	—	—	4.3	4.8	4.4	4.9	4.3	5.3	18	21	20	25
C 61 2_38.0	38.0	—	—	4.3	4.8	4.4	4.9	4.3	5.3	18	21	20	25
C 61 3_26.8	26.8	—	—	—	—	13	14	13	14	27	29	29	34
C 61 3_29.4	29.4	—	—	—	—	13	14	13	14	27	29	29	34
C 61 3_33.0	33.0	—	—	—	—	11	12	11	12	25	28	27	32
C 61 3_36.1	36.1	—	—	—	—	11	12	11	12	25	28	27	32
C 61 3_43.4	43.4	—	—	—	—	7.9	8.4	7.8	8.8	22	24	24	29
C 61 3_47.6	47.6	—	—	—	—	7.9	8.4	7.8	8.8	22	24	24	29
C 61 3_53.5	53.5	—	—	—	—	6.8	7.3	6.7	7.7	21	23	23	28
C 61 3_58.6	58.6	—	—	—	—	6.7	7.2	6.6	7.6	21	23	23	28
C 61 3_67.7	67.7	—	—	5.6	6.1	5.7	6.2	5.6	6.6	20	22	22	27
C 61 3_74.2	74.2	—	—	5.6	6.1	5.7	6.2	5.6	6.6	20	22	22	27
C 61 3_83.0	83.0	—	—	4.7	5.2	4.8	5.3	4.7	5.7	19	21	21	26
C 61 3_91.0	91.0	—	—	4.7	5.2	4.8	5.3	4.7	5.7	19	21	21	26
C 61 3_103.6	103.6	—	—	4.1	4.6	4.2	4.7	4.1	5.1	18	21	20	25
C 61 3_113.6	113.6	—	—	4.1	4.6	4.2	4.7	4.1	5.1	18	21	20	25
C 61 3_128.1	128.1	—	—	3.8	4.3	3.9	4.4	3.8	4.8	18	20	20	25
C 61 3_140.5	140.5	—	—	3.8	4.3	3.9	4.4	3.8	4.8	18	20	20	25
C 61 3_150.0	150.0	—	—	3.5	4.0	3.6	4.1	3.5	4.5	—	—	—	—
C 61 3_164.5	164.5	—	—	3.5	4.0	3.6	4.1	3.5	4.5	—	—	—	—
C 61 3_178.6	178.6	—	—	3.4	3.9	3.5	4.0	3.4	4.4	—	—	—	—
C 61 3_195.8	195.8	—	—	3.4	3.9	3.5	4.0	3.4	4.4	—	—	—	—
C 61 4_217.4	217.4	3.5	3.9	3.5	3.9	3.6	4.1	3.5	4.5	—	—	—	—
C 61 4_238.3	238.3	3.5	3.9	3.5	3.9	3.6	4.1	3.5	4.5	—	—	—	—
C 61 4_275.3	275.3	3.6	4.1	3.6	4.1	3.7	4.2	3.6	4.6	—	—	—	—
C 61 4_301.7	301.7	3.6	4.1	3.6	4.1	3.7	4.2	3.6	4.6	—	—	—	—
C 61 4_337.7	337.7	3.4	3.8	3.4	3.8	3.5	4.0	3.4	4.4	—	—	—	—
C 61 4_370.1	370.1	3.4	3.8	3.4	3.8	3.5	4.0	3.4	4.4	—	—	—	—
C 61 4_421.5	421.5	3.4	3.8	3.4	3.8	3.4	3.9	3.3	4.3	—	—	—	—
C 61 4_462.0	462.0	3.4	3.8	3.4	3.8	3.4	3.9	3.3	4.3	—	—	—	—
C 61 4_521.1	521.1	3.3	3.8	3.3	3.8	3.4	3.9	3.3	4.3	—	—	—	—
C 61 4_571.2	571.2	3.3	3.8	3.3	3.8	3.4	3.9	3.3	4.3	—	—	—	—
C 61 4_610.1	610.1	3.3	3.7	3.3	3.7	3.4	3.9	3.3	4.3	—	—	—	—
C 61 4_668.8	668.8	3.3	3.7	3.3	3.7	3.4	3.9	3.3	4.3	—	—	—	—
C 61 4_726.3	726.3	3.3	3.7	3.3	3.7	3.4	3.9	3.3	4.3	—	—	—	—
C 61 4_796.1	796.1	3.3	3.7	3.3	3.7	3.4	3.9	3.3	4.3	—	—	—	—

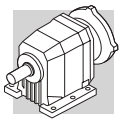

C 70

	i	J (•10-4) [kgm2]													
			IEC												
			63	71	80	90	100 112	132	160	180	200	225	250	280	
C 70 2_4.6	4.6	—	—	—	—	—	—	—	136	133	143	—	—	—	99
C 70 2_5.9	5.9	—	—	—	—	—	—	—	119	117	126	—	—	—	32
C 70 2_6.3	6.3	—	—	—	—	—	—	—	129	127	136	—	—	—	93
C 70 2_7.5	7.5	26	—	—	—	—	—	45	105	102	112	—	—	—	68
C 70 2_8.0	8.0	—	—	—	—	—	—	—	115	113	122	—	—	—	78
C 70 2_9.5	9.5	19	—	—	—	—	—	38	97	95	—	—	—	—	60
C 70 2_10.2	10.2	24	—	—	—	—	—	43	102	100	109	—	—	—	65
C 70 2_11.2	11.2	15	—	—	—	—	—	34	94	91	—	—	—	—	56
C 70 2_13.0	13.0	17	—	—	—	—	—	36	95	93	—	—	—	—	58
C 70 2_14.1	14.1	9.9	—	—	12	12	14	29	88	86	—	—	—	—	51
C 70 2_15.3	15.3	14	—	—	—	—	—	33	93	90	—	—	—	—	55
C 70 2_16.7	16.7	6.9	—	—	9.5	9.4	11	26	85	83	—	—	—	—	48
C 70 2_19.3	19.3	9.1	—	—	12	12	13	28	87	85	—	—	—	—	50
C 70 2_22.9	22.9	6.4	—	—	9.0	8.9	10	25	85	83	—	—	—	—	48
C 70 2_27.7	27.7	5.2	—	—	8.0	7.9	9.2	24	84	81	—	—	—	—	46
C 70 2_34.7	34.7	3.2	—	—	6.1	6.0	7.3	22	82	79	—	—	—	—	44
C 70 3_41.3	41.3	4.4	—	—	7.2	7.2	8.5	23	83	80	—	—	—	—	46
C 70 3_44.7	44.7	4.2	—	—	7.0	7.0	8.2	23	83	80	—	—	—	—	45
C 70 3_52.2	52.2	3.0	—	—	5.8	5.8	7.0	22	81	79	—	—	—	—	44
C 70 3_56.5	56.5	2.8	—	—	5.7	5.6	6.9	22	81	79	—	—	—	—	44
C 70 3_65.9	65.9	2.0	—	—	4.9	4.8	6.1	21	80	78	—	—	—	—	43
C 70 3_71.3	71.3	2.0	—	—	4.8	4.8	6.0	21	80	78	—	—	—	—	43
C 70 3_81.4	81.4	1.5	—	—	4.3	4.3	5.6	20	80	78	—	—	—	—	43
C 70 3_88.2	88.2	1.4	—	—	4.3	4.2	5.5	20	80	76	—	—	—	—	43
C 70 3_103.8	103.8	1.0	—	—	3.8	3.8	5.1	20	79	77	—	—	—	—	42
C 70 3_112.4	112.4	0.90	—	—	3.8	3.7	5.0	20	79	77	—	—	—	—	42
C 70 3_126.8	126.8	0.70	—	—	3.5	3.5	4.8	20	79	77	—	—	—	—	42
C 70 3_137.4	137.4	0.70	—	—	3.5	3.5	4.7	20	79	77	—	—	—	—	42
C 70 3_150.3	150.3	0.50	—	—	3.4	3.4	9.6	—	—	—	—	—	—	—	42
C 70 3_162.8	162.8	0.50	—	—	3.4	3.4	4.6	—	—	—	—	—	—	—	42
C 70 3_179.2	179.2	0.40	—	—	3.2	3.3	4.5	—	—	—	—	—	—	—	42
C 70 3_194.1	194.1	0.40	—	—	3.2	3.2	4.5	—	—	—	—	—	—	—	42
C 70 3_220.9	220.9	0.30	—	—	3.1	3.1	4.3	—	—	—	—	—	—	—	41
C 70 3_239.3	239.3	0.30	—	—	3.1	3.1	4.3	—	—	—	—	—	—	—	41
C 70 4_251.3	251.3	0.70	2.2	2.2	3.5	3.5	4.8	20	—	—	—	—	—	—	11
C 70 4_272.2	272.2	0.70	2.2	2.1	3.5	3.5	4.8	20	—	—	—	—	—	—	11
C 70 4_317.9	317.9	0.50	2.0	2.0	3.4	3.3	4.6	19	—	—	—	—	—	—	11
C 70 4_344.3	344.3	0.50	2.0	2.0	3.4	3.3	4.6	19	—	—	—	—	—	—	11
C 70 4_409.4	409.4	0.40	1.8	1.8	3.2	3.2	4.5	19	—	—	—	—	—	—	7.9
C 70 4_443.5	443.5	0.40	1.8	1.8	3.2	3.2	4.5	19	—	—	—	—	—	—	7.9
C 70 4_512.0	512.0	0.30	1.7	1.7	3.1	3.1	4.4	19	—	—	—	—	—	—	7.8
C 70 4_554.7	554.7	0.30	1.7	1.7	3.1	3.1	4.4	19	—	—	—	—	—	—	7.8
C 70 4_606.8	606.8	0.20	1.7	1.7	3.1	3.0	4.3	—	—	—	—	—	—	—	7.8
C 70 4_657.3	657.3	0.20	1.7	1.7	3.1	3.0	4.3	—	—	—	—	—	—	—	7.7
C 70 4_736.0	736.0	0.20	1.6	1.6	3.0	2.9	4.3	—	—	—	—	—	—	—	7.7
C 70 4_797.3	797.3	0.20	1.6	1.6	3.0	2.9	4.3	—	—	—	—	—	—	—	7.7
C 70 4_922.6	922.6	0.10	1.6	1.6	3.0	2.9	4.2	—	—	—	—	—	—	—	7.7
C 70 4_999.5	999.5	0.10	1.6	1.6	3.0	2.9	4.2	—	—	—	—	—	—	—	7.6
C 70 4_1069	1069	0.80	1.6	1.5	2.9	2.9	4.2	—	—	—	—	—	—	—	7.6
C 70 4_1158	1158	0.80	1.6	1.5	2.9	2.9	4.2	—	—	—	—	—	—	—	7.6
C 70 4_1362	1362	0.60	1.5	1.5	2.9	2.9	4.1	—	—	—	—	—	—	—	7.6
C 70 4_1476	1476	0.60	1.5	1.5	2.9	2.9	4.1	—	—	—	—	—	—	—	7.6

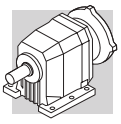

C 80

	i	J (•10-4) [kgm2]													
			IEC												
			63	71	80	90	100 112	132	160	180	200	225	250	280	
C 80 2_5.6	5.6	—	—	—	—	—	—	—	—	197	211	489	—	—	164
C 80 2_6.1	6.1	—	—	—	—	—	—	—	—	193	210	485	—	—	159
C 80 2_7.0	7.0	—	—	—	—	—	—	—	160	161	174	452	—	—	127
C 80 2_7.6	7.6	—	—	—	—	—	—	—	158	158	172	449	—	—	124
C 80 2_8.9	8.9	—	—	—	—	—	—	—	137	135	146	429	—	—	101
C 80 2_9.6	9.6	—	—	—	—	—	—	—	136	133	144	427	—	—	99
C 80 2_11.1	11.1	38	—	—	—	—	—	56	116	113	124	408	—	—	79
C 80 2_12.0	12.0	36	—	—	—	—	—	55	115	112	123	407	—	—	78
C 80 2_13.8	13.8	28	—	—	—	—	—	47	106	104	135	398	—	—	69
C 80 2_14.9	14.9	27	—	—	—	—	—	46	106	103	134	397	—	—	69
C 80 2_16.7	16.7	21	—	—	—	—	—	40	100	97	127	391	—	—	63
C 80 2_18.1	18.1	21	—	—	—	—	—	40	99	97	127	390	—	—	62
C 80 2_20.5	20.5	14	—	—	17	17	18	33	93	90	120	383	—	—	55
C 80 2_22.2	22.2	14	—	—	16	16	18	33	92	90	120	383	—	—	55
C 80 2_24.0	24.0	13	—	—	16	16	17	32	91	89	119	382	—	—	54
C 80 2_25.9	25.9	13	—	—	16	15	17	32	91	89	118	382	—	—	54
C 80 2_31.3	31.3	8.7	—	—	12	11	13	28	87	85	—	—	—	—	50
C 80 2_39.1	39.1	5.2	—	—	8.0	8.0	9.2	24	84	81	—	—	—	—	46
C 80 3_43.5	43.5	9.6	—	—	12	12	14	29	88	86	—	—	—	—	51
C 80 3_47.4	47.4	9.1	—	—	12	12	13	28	87	85	—	—	—	—	50
C 80 3_57.3	57.3	5.7	—	—	8.5	8.5	9.7	25	84	82	—	—	—	—	47
C 80 3_62.5	62.5	5.4	—	—	8.2	8.2	9.5	24	84	82	—	—	—	—	47
C 80 3_70.5	70.5	4.3	—	—	7.1	7.0	8.3	23	83	80	—	—	—	—	45
C 80 3_76.9	76.9	4.1	—	—	7.0	6.9	8.2	23	82	80	—	—	—	—	45
C 80 3_89.3	89.3	3.0	—	—	5.9	5.8	7.1	22	81	79	—	—	—	—	44
C 80 3_97.4	97.4	2.9	—	—	5.8	5.7	7.0	22	81	79	—	—	—	—	44
C 80 3_109.5	109.5	2.0	—	—	4.8	4.8	6.1	21	80	78	—	—	—	—	43
C 80 3_119.5	119.5	1.9	—	—	4.8	4.7	6.0	21	80	79	—	—	—	—	43
C 80 3_136.7	136.7	1.4	—	—	4.3	4.2	5.5	20	80	78	—	—	—	—	43
C 80 3_149.1	149.1	1.4	—	—	4.2	4.2	5.5	20	80	77	—	—	—	—	43
C 80 3_169.0	169.0	1.0	—	—	3.9	3.8	5.1	20	80	77	—	—	—	—	42
C 80 3_184.4	184.4	1.0	—	—	3.9	3.8	5.1	20	80	77	—	—	—	—	42
C 80 3_197.9	197.9	0.80	—	—	3.7	3.6	4.9	—	—	—	—	—	—	—	42
C 80 3_215.8	215.8	0.80	—	—	3.6	3.6	4.9	—	—	—	—	—	—	—	42
C 80 4_261.9	261.9	1.7	—	—	4.6	4.5	5.8	21	—	—	—	—	—	—	12
C 80 4_285.7	285.7	1.7	—	—	4.6	4.5	5.8	21	—	—	—	—	—	—	12
C 80 4_334.3	334.3	1.2	2.7	2.7	4.0	4.0	5.3	20	—	—	—	—	—	—	11
C 80 4_364.7	364.7	1.2	2.7	2.6	4.0	4.0	5.3	20	—	—	—	—	—	—	11
C 80 4_417.5	417.5	0.90	2.4	2.3	3.7	3.7	5.0	20	—	—	—	—	—	—	11
C 80 4_455.4	455.4	0.90	2.3	2.3	3.7	3.7	5.5	20	—	—	—	—	—	—	11
C 80 4_529.3	529.3	0.50	2.0	2.0	3.4	3.3	4.6	19	—	—	—	—	—	—	11
C 80 4_577.4	577.4	0.50	2.0	2.0	3.4	3.3	4.6	19	—	—	—	—	—	—	11
C 80 4_664.3	664.3	0.40	2.0	1.9	3.3	3.2	4.5	19	—	—	—	—	—	—	11
C 80 4_724.7	724.7	0.40	2.0	1.9	3.3	3.2	4.5	19	—	—	—	—	—	—	11
C 80 4_783.4	783.4	0.30	2.0	1.8	3.2	3.1	4.4	—	—	—	—	—	—	—	9.4
C 80 4_854.6	854.6	0.30	2.0	1.8	3.2	3.1	4.4	—	—	—	—	—	—	—	9.4
C 80 4_945.7	945.7	0.20	1.7	1.7	3.1	3.0	4.3	—	—	—	—	—	—	—	9.3
C 80 4_1032	1032	0.20	1.7	1.7	3.1	3.0	4.3	—	—	—	—	—	—	—	9.3
C 80 4_1168	1168	0.20	1.6	1.6	3.0	3.0	4.2	—	—	—	—	—	—	—	9.2
C 80 4_1274	1274	0.20	1.6	1.6	3.0	3.0	4.2	—	—	—	—	—	—	—	9.2
C 80 4_1358	1358	0.10	1.6	1.6	3.0	2.9	4.2	—	—	—	—	—	—	—	9.2
C 80 4_1481	1481	0.10	1.6	1.6	3.0	2.9	4.2	—	—	—	—	—	—	—	9.2

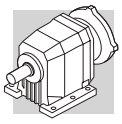

C 90

	i	J (•10-4) [kgm2]													
			IEC												
			63	71	80	90	100 112	132	160	180	200	225	250	280	
C 90 2_5.2	5.2	—	—	—	—	—	—	—	—	—	332	610	637	—	619
C 90 2_5.6	5.6	—	—	—	—	—	—	—	—	—	321	599	626	—	609
C 90 2_6.8	6.8	—	—	—	—	—	—	—	—	—	252	530	557	—	540
C 90 2_7.3	7.3	—	—	—	—	—	—	—	—	—	246	524	551	—	533
C 90 2_8.3	8.3	—	—	—	—	—	—	—	—	—	212	490	517	—	499
C 90 2_9.0	9.0	—	—	—	—	—	—	—	—	—	208	485	513	—	495
C 90 2_10.4	10.4	—	—	—	—	—	—	—	167	164	175	458	484	—	461
C 90 2_11.2	11.2	—	—	—	—	—	—	—	164	162	173	455	482	—	458
C 90 2_12.8	12.8	65	—	—	—	—	—	84	143	141	152	436	462	—	439
C 90 2_13.9	13.9	63	—	—	—	—	—	82	141	139	200	434	460	—	437
C 90 2_16.0	16.0	47	—	—	—	—	—	66	125	123	154	417	443	—	420
C 90 2_17.3	17.3	46	—	—	—	—	—	65	124	122	153	416	442	—	419
C 90 2_18.7	18.7	42	—	—	—	—	—	61	121	119	148	412	433	—	415
C 90 2_20.2	20.2	41	—	—	—	—	—	61	199	118	147	411	438	—	414
C 90 2_22.9	22.9	28	—	—	30	30	31	47	106	104	133	397	423	—	400
C 90 2_24.8	24.8	27	—	—	29	29	31	46	105	103	133	396	422	—	399
C 90 2_27.2	27.2	22	—	—	25	25	26	41	101	99	128	391	418	—	394
C 90 2_29.4	29.4	22	—	—	25	24	26	41	100	98	127	391	417	—	394
C 90 2_35.1	35.1	14	—	—	17	17	18	33	93	90	—	—	—	—	386
C 90 3_39.4	39.4	27	—	—	—	—	—	46	105	103	112	398	424	—	412
C 90 3_43.0	43.0	26	—	—	—	—	—	45	104	102	111	396	422	—	410
C 90 3_50.3	50.3	19	—	—	—	—	—	38	98	95	126	389	415	—	403
C 90 3_54.9	54.9	19	—	—	—	—	—	37	97	95	125	389	415	—	401
C 90 3_59.2	59.2	16	—	—	—	—	—	35	94	92	122	385	411	—	398
C 90 3_64.6	64.6	15	—	—	—	—	—	34	94	91	121	384	410	—	398
C 90 3_74.4	74.4	10	—	—	13	13	14	29	88	86	116	379	405	—	393
C 90 3_81.2	81.2	9.8	—	—	12	12	13	29	88	86	115	379	405	—	392
C 90 3_88.2	88.2	7.1	—	—	9.7	9.6	11	26	85	83	113	376	402	—	389
C 90 3_96.2	96.2	6.9	—	—	9.4	9.4	11	26	85	83	112	376	402	—	389
C 90 3_107.0	107.0	5.7	—	—	8.4	8.4	9.6	25	84	82	—	—	—	—	388
C 90 3_116.7	116.7	5.5	—	—	8.3	8.2	9.5	24	84	82	—	—	—	—	388
C 90 3_134.1	134.1	3.5	—	—	6.4	6.3	7.6	22	82	80	—	—	—	—	386
C 90 3_146.3	146.3	3.4	—	—	6.3	6.2	7.5	22	82	80	—	—	—	—	386
C 90 3_157.8	157.8	2.5	—	—	5.4	5.3	6.6	21	81	79	—	—	—	—	385
C 90 3_172.1	172.1	2.4	—	—	5.3	5.2	6.5	21	81	79	—	—	—	—	385
C 90 4_212.4	212.4	4.2	—	—	7.0	7.0	8.3	23	83	80	—	—	—	—	14
C 90 4_231.7	231.7	4.1	—	—	7.0	6.9	8.2	23	82	80	—	—	—	—	14
C 90 4_268.5	268.5	2.8	—	—	5.7	5.6	6.9	22	81	79	—	—	—	—	13
C 90 4_292.9	292.9	2.8	—	—	5.7	2.6	6.9	22	81	79	—	—	—	—	13
C 90 4_339.0	339.0	2.0	3.4	3.4	4.8	4.8	6.0	21	80	78	—	—	—	—	12
C 90 4_369.8	369.8	2.0	3.4	3.4	4.8	4.8	6.0	21	80	78	—	—	—	—	12
C 90 4_419.0	419.0	1.4	2.9	2.9	4.3	4.2	5.5	20	80	78	—	—	—	—	12
C 90 4_457.1	457.1	1.4	2.9	2.9	4.3	4.2	5.5	20	80	78	—	—	—	—	12
C 90 4_534.2	534.2	0.90	2.4	2.4	3.8	3.7	5.0	20	79	77	—	—	—	—	11
C 90 4_582.8	582.8	0.90	2.4	2.4	3.8	3.7	5.0	20	79	77	—	—	—	—	11
C 90 4_652.8	652.8	0.70	2.1	2.1	3.5	3.5	4.7	20	79	77	—	—	—	—	11
C 90 4_712.2	712.2	0.70	2.1	2.1	3.5	3.5	4.7	20	79	77	—	—	—	—	11
C 90 4_773.6	773.6	0.50	2.0	2.0	3.4	3.3	4.6	—	—	—	—	—	—	—	9.7
C 90 4_844.0	844.0	0.50	2.0	2.0	3.4	3.3	4.6	—	—	—	—	—	—	—	9.6
C 90 4_922.3	922.3	0.40	1.8	1.8	3.2	3.2	4.5	—	—	—	—	—	—	—	9.5
C 90 4_1006	1006	0.40	1.8	1.8	3.2	3.2	4.5	—	—	—	—	—	—	—	9.4
C 90 4_1137	1137	0.30	1.7	1.7	3.1	3.0	4.3	—	—	—	—	—	—	—	9.3
C 90 4_1240	1240	0.30	1.7	1.7	3.1	3.0	4.3	—	—	—	—	—	—	—	9.3

Bonfiglioli Riduttori

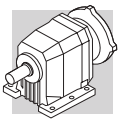

C 100

	i	J (•10-4) [kgm2]													
			IEC												
			63	71	80	90	100 112	132	160	180	200	225	250	280	
C 100 2_4.9	4.9	—	—	—	—	—	—	—	—	—	674	960	987	970	972
C 100 2_5.3	5.3	—	—	—	—	—	—	—	—	—	647	933	960	943	944
C 100 2_6.5	6.5	—	—	—	—	—	—	—	—	—	481	767	794	777	778
C 100 2_7.1	7.1	—	—	—	—	—	—	—	—	—	465	751	778	761	763
C 100 2_8.4	8.4	—	—	—	—	—	—	—	—	—	365	651	678	660	662
C 100 2_9.0	9.0	—	—	—	—	—	—	—	—	—	355	641	668	651	653
C 100 2_10.1	10.1	—	—	—	—	—	—	—	—	—	291	577	604	587	589
C 100 2_10.9	10.9	—	—	—	—	—	—	—	—	—	285	570	597	580	582
C 100 2_12.5	12.5	—	—	—	—	—	—	—	224	222	233	521	550	539	529
C 100 2_13.5	13.5	—	—	—	—	—	—	—	220	218	228	517	545	532	524
C 100 2_15.2	15.2	122	—	—	—	—	—	82	141	200	199	472	499	528	514
C 100 2_16.5	16.5	119	—	—	—	—	—	138	197	195	206	496	525	511	504
C 100 2_18.7	18.7	97	—	—	—	—	—	116	175	173	203	474	501	488	480
C 100 2_20.2	20.2	95	—	—	—	—	—	114	173	171	201	471	499	486	478
C 100 2_22.2	22.2	73	—	—	—	—	—	92	102	150	179	448	477	463	456
C 100 2_24.1	24.1	72	—	—	—	—	—	91	150	148	178	447	476	462	455
C 100 2_29.6	29.6	50	—	—	—	—	54	69	129	127	156	425	454	440	433
C 100 3_34.3	34.3	—	—	—	—	—	—	—	148	146	155	439	465	471	461
C 100 3_36.9	36.9	—	—	—	—	—	—	—	145	143	152	436	462	468	458
C 100 3_42.9	42.9	44	—	—	—	—	—	63	123	120	130	415	441	451	437
C 100 3_46.2	46.2	43	—	—	—	—	—	61	121	118	128	413	439	452	435
C 100 3_53.3	53.3	33	—	—	—	—	—	51	111	109	139	403	429	432	424
C 100 3_57.4	57.4	31	—	—	—	—	—	50	110	107	138	401	427	431	423
C 1003_64.5	64.5	24	—	—	—	—	—	43	103	101	130	394	420	422	415
C 100 3_69.4	69.4	24	—	—	—	—	—	43	102	100	129	393	419	421	414
C 100 3_79.4	79.4	16	—	—	—	—	20	35	95	92	122	385	411	413	407
C 100 3_85.6	85.6	16	—	—	—	—	19	35	94	92	121	385	411	413	406
C 100 3_92.7	92.7	15	—	—	—	—	18	34	93	91	120	384	410	412	405
C 100 3_99.8	99.8	14	—	—	—	—	18	33	93	90	119	383	409	411	404
C 100 3_111.9	111.9	9.9	—	—	—	—	14	29	88	86	—	—	—	—	392
C 100 3_120.5	120.5	9.6	—	—	—	—	14	29	88	86	—	—	—	—	392
C 100 3_139.7	139.7	6.0	—	—	—	—	10	25	84	82	—	—	—	—	388
C 100 3_150.4	150.4	5.8	—	—	—	—	9.8	25	84	82	—	—	—	—	388
C 100 4_162.1	162.1	13	—	—	16	16	17	32	100	89	—	—	—	—	23
C 100 4_185.4	185.4	9.6	—	—	13	12	14	29	88	86	—	—	—	—	20
C 100 4_199.6	199.6	8.5	—	—	12	12	14	28	88	86	—	—	—	—	20
C 100 4_244.2	244.2	5.7	—	—	8.5	8.5	9.8	25	84	82	—	—	—	—	16
C 100 4_263.0	263.0	5.6	—	—	8.5	8.4	9.7	25	84	82	—	—	—	—	16
C 100 4_300.5	300.5	4.2	—	—	7.1	7.1	8.4	23	83	80	—	—	—	—	15
C 100 4_323.6	323.6	4.2	—	—	7.1	7.0	8.3	23	83	80	—	—	—	—	14
C 100 4_380.5	380.5	3.1	4.5	4.5	5.9	5.5	7.1	22	81	79	—	—	—	—	13
C 100 4_409.8	409.8	3.0	4.5	4.5	5.9	5.5	7.1	22	81	79	—	—	—	—	13
C 100 4_466.7	466.7	2.0	3.5	3.5	4.9	4.8	6.1	20	80	78	—	—	—	—	12
C 100 4_502.6	502.6	2.0	3.5	3.4	4.8	4.8	6.1	20	80	78	—	—	—	—	12
C 100 4_582.6	582.6	1.4	2.9	2.9	4.3	4.2	5.5	20	80	77	—	—	—	—	12
C 100 4_627.4	627.4	1.4	2.9	2.9	4.3	4.2	5.5	20	80	77	—	—	—	—	12
C 100 4_720.3	720.3	1.0	2.5	2.5	3.9	3.4	5.1	20	79	77	—	—	—	—	11
C 100 4_775.7	775.7	1.0	2.5	2.5	3.9	3.4	5.1	20	79	77	—	—	—	—	11
C 100 4_843.3	843.3	0.80	2.3	2.3	3.7	3.6	4.9	—	—	—	—	—	—	—	9.9
C 100 4_908.2	908.2	0.80	2.3	2.3	3.7	3.6	4.9	—	—	—	—	—	—	—	9.9
C 100 4_1004	1004	0.60	2.1	2.0	3.4	3.4	4.7	—	—	—	—	—	—	—	9.7
C 100 4_1081	1081	0.60	2.1	2.0	3.4	3.4	4.7	—	—	—	—	—	—	—	9.7

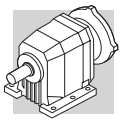

29 EXACT RATIOS

i_N	C12	C22	C32	C36	C41	C51	C61	C70	C80	C90	C100
2.5						2.62895					
2.8	2.76731	2.72212	2.87879	2.68687	2.65909		2.82011				
3.2	3.20743	3.32609		3.18182		3.30758					
3.5	3.65132	3.70709	3.40909	3.48617	3.61111		3.69925				
4.0			3.73518	4.20000							
4.5	4.31203	4.25831	4.50000	4.62201	4.66304	4.45370	4.55556	4.57143			
5.0	4.86842	4.76902	4.95215	5.27807						5.17231	4.92308
5.6	5.59868	5.59006	5.65508	5.84659	5.95263	5.63043		5.85034	5.64103	5.60333	5.33333
6.3	6.23158	6.08696	6.26420		6.36364		6.00176 6.74074	6.25455	6.11111	6.75824	6.52308
7.1		7.08300	7.16498	6.78114	7.06612	6.98684	7.48485	7.46032	7.04000	7.32143	7.06667
8.0	7.62201		8.48485	8.03030		7.75120		8.00433	7.62667	8.32615	8.35165
9.0	8.83422	8.65455	9.29644	8.79842	8.64198	8.79040	8.84211	9.52381	8.86447	9.02000	9.04762
10.0	10.05682	9.64593		10.60000	9.59596	9.75207	9.81818	10.20707	9.60317	10.36264	10.09231
11.2		11.08021	11.20000	11.66507	11.15942	11.83642	10.88889	11.20879	11.09402	11.22619	10.93333
12.5	11.87662	12.40909	12.32536	13.32086	12.39130	13.13131	12.09091	13.03030	12.01852	12.79060	12.45421
14.0	13.40909	14.54545	14.07487	14.75568	14.24561	14.96377	14.34568	14.09524	13.76410 14.91111	13.85648	13.49206
16.0	15.42045	15.83838	15.59091		15.81818	16.60079	15.92929	15.33566 16.70330	16.66272	15.97949	15.21368 16.48148
18.0	17.16364 18.38961	18.13636	18.18182	17.20779	17.79167	18.89035	17.65217		18.05128	17.31111 18.68047	18.66667
20.0	20.62937	20.02424	20.08081	19.00505	19.75568	20.95694 21.81606	19.60079	19.28485	20.53333	20.23718	20.22222
22.4	23.24242	21.45455	22.90909	22.13187	22.55556	23.35417 23.89242	22.35088	22.85315	22.24444	22.91795	22.24852
25.0	25.35537	24.27972	25.11515	26.20879	25.04545	25.90909	24.81818 26.77895		23.95266 25.94872	24.82778	24.10256
28.0	29.50000	27.15152 29.61983	26.90909	28.71572	28.31111 28.49003	27.44759 29.77315	27.41667 29.35385	27.71901		27.17160 29.43590	29.55556
31.5	32.77778	33.09091	29.76224 33.09091		31.22945 31.43636	30.05994 33.03030	30.44318 32.97778		31.33333		
35.5	37.00909	36.76768	36.09917	34.59560	33.38462 36.78930	36.38333 36.95862	34.22222 36.14872	34.74747		35.09848	34.29705 36.93529
40.0	42.31313		40.72727	38.07172	37.06993 40.32673	40.36364 40.47619	38.00000	41.26263	39.11111	39.40239	42.92328
45.0		43.27273	45.25253	43.47576	44.75207 46.96356	43.11538 46.72360	43.44691	44.70118	43.49074	42.98443	46.22507
50.0	47.60227	48.64646	52.43636	48.15865	51.47929	47.83217 51.40152	47.62450	52.16479	47.44444	50.30093	53.25397
56.0	55.16883	54.72727	59.39394	56.16170	58.65385	57.02479 58.98416	53.46087 58.60134	56.51186	57.29733	54.87374 59.20032	57.35043
63.0	66.15152	60.00000 63.27273	66.81818	62.02747	64.29364	64.59803		65.85315	62.50617	64.58217	64.46886
71.0		65.33333 74.81250	74.74747	70.76374	74.35897	72.92219	67.69123 74.20000	71.34091	70.50362	74.44537	69.42801
80.0		82.60000	82.55443	77.57802 83.11931	81.50888	79.86264	83.03333	81.41434	76.91304	81.21313	79.44444
90.0		88.50000	94.18182	91.93238	93.33333	92.96514	91.01731	88.19886	89.27047	88.22009	85.55556 92.67399
100.0		100.15385	103.25118	102.21429	102.30769	101.81319	103.64444	103.79138	97.38596	96.24009	99.80276

2x 3x

Bonfiglioli Riduttori

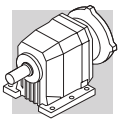

i_N	C12	C22	C32	C36	C41	C51	C61	C70	C80	C90	C100
112.2		112.00000	110.62626	111.50649	110.05917	113.60510	113.61026	112.44066	109.50347	107.00379 116.73140	111.90476
125.5		122.18182	122.35587	125.80220	120.64178	124.41758	128.14222	126.83497	119.45833		120.51282
140.0		136.50000	136.04040 148.40771	139.78022	132.86713 145.64282	134.62559 147.43872	140.46359	137.40455	136.68519 149.11111	134.13580 146.32997	139.68254
160.0		151.66667	167.43434	161.97033	164.10256	160.49861	150.03077 164.45680	150.30339 162.82867	168.99259	157.76199	150.42735 162.10526
180.0		178.50000	186.03816	183.46154	179.88166	175.77423	178.59394	179.18945	184.35556	172.10399	185.37037
200.0		200.66667		206.39423	190.76923 209.11243	197.87075	195.76643	194.12190	197.85897	212.38169	199.62963
225.0		225.75000	215.57172	230.88697		216.70330	217.40754	220.91375	215.84615	231.68911	
250.0		261.00000	244.17508	255.00183	239.94755	240.85197 263.77530	238.31211	239.32323 251.28438	261.85613	268.49591	244.21811 263.00412
280.0			274.69697	290.91758	263.01943		275.27766	272.22475	285.66123	292.90463	300.50725
315.0				318.93187	304.19580 333.44540	297.76563 326.10577	301.74667	317.86109	334.27376	338.95085	323.62319
355.0				341.71272			337.66889 370.13705	344.34951	364.66228	369.76457	380.49708
400.0				377.94421 420.21429	381.81818 418.53147	379.60764 415.73718	421.48741	409.39931	417.48199	419.04541	409.76608
450.0				458.41558	450.24207	463.88750	462.01504	443.51592	455.43490	457.14044	466.73611
500.0				517.18681	493.53457	508.03846	521.11170	512.03745	529.26678		502.63889
560.0				574.65201	543.54736	549.72115	571.21860	554.70724	577.38194	534.22163 582.78723	582.59259
630.0				665.87802	595.81153	602.04142 655.36932	610.12513 668.79101	606.78035 657.34538	664.32106	652.82863	627.40741
710.0				754.23077	671.32867 735.87951	717.74476	726.28202	735.97521	724.71389	712.17669	720.29630
800.0				848.50962	780.41958	807.97222	796.11683	797.30647	783.37099	773.62229 843.95159	775.70370 843.33333
900.0					855.45992	884.87179		922.59000	854.58654 945.71181	922.30089	908.20513
1000.0								999.47250 1069.05117	1031.68561	1006.14643	1003.88889
1125.0								1158.13876	1168.03704	1137.05888	1081.11111
1250.0									1274.22222	1240.42787	
1400.0								1362.26180 1475.78362	1357.84306 1481.28333		

3x 4x

C 05...M

P

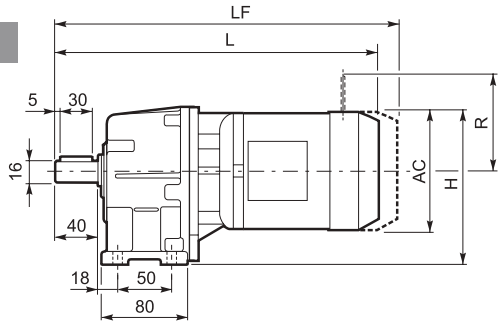

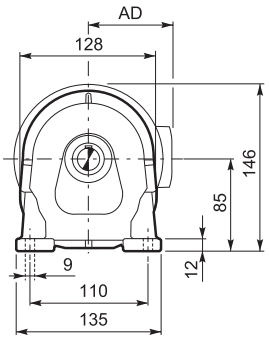

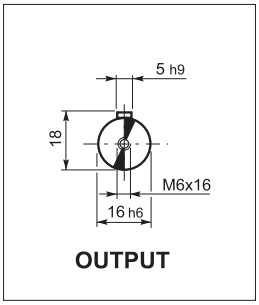

F

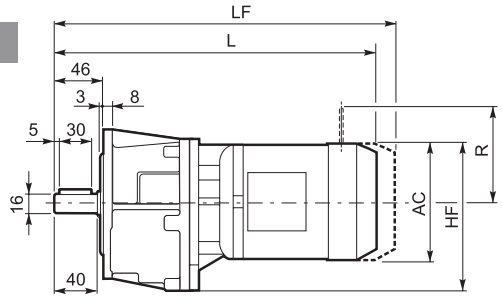

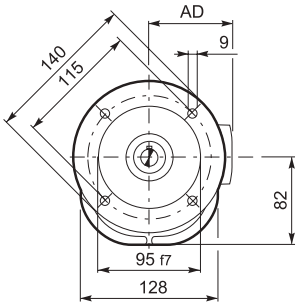

									M...FD M...FA		M...FD		M...FA	
51	U	C	AC	H	HF	L	AD		LF		R	AD	R	AD
C 05 2	**S0**	**M0**	110	140	137	287	91	7	—	—	—	—	—	—
C 05 2	**S05**	**M05**	121	145.5	142.5	332	95	8	398	10	96	122	116	95
C 05 2	**S1**	**M1**	138	154	151	360.5	108	11	423	13	103	135	124	108

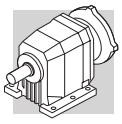

C 12...M

P

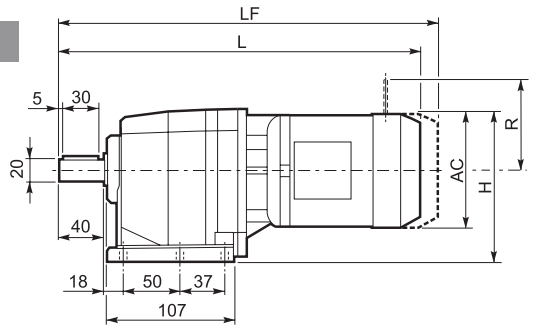

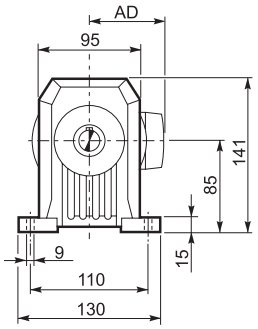

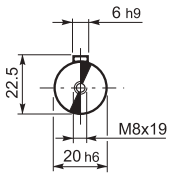

OUTPUT

F

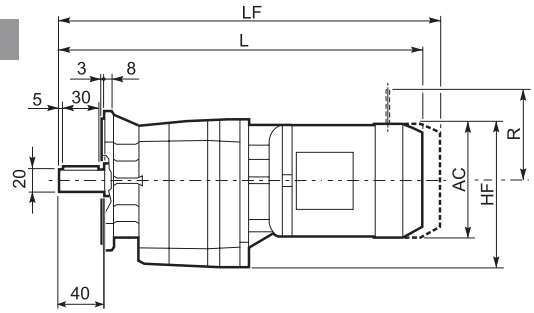

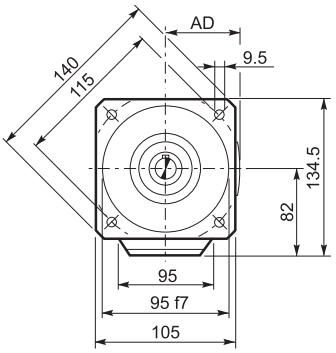

U

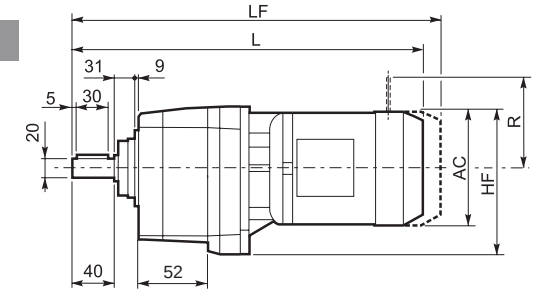

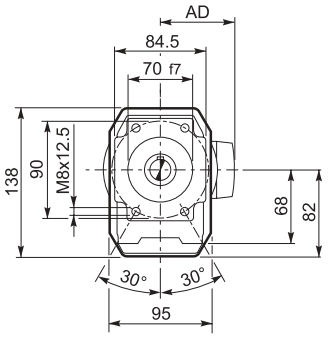

UF

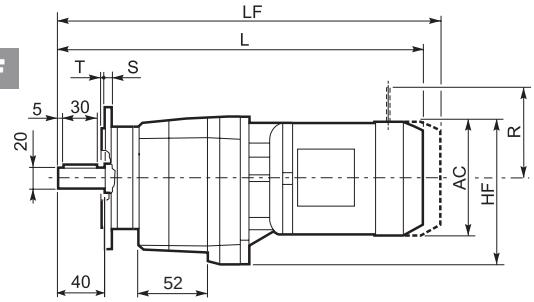

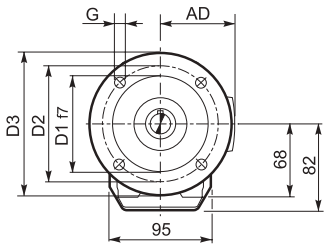

C 12 2_U					
	D1	D2	D3	G	T	S
FA	80	100	120	7	3	8
FB	95	115	140	9	3	10
FC	110	130	160	9	3	10

									M...FD M...FA		M...FD		M...FA	
			AC	H	HF	L	AD		LF		R	AD	R	AD
C 12 2	S05	M05	121	145.5	142.5	370.5	95	9	436.5	10	96	122	116	95
C 12 2	S1	M1	138	154	151	404.5	108	11	460.5	13	103	135	124	108
C 12 2	S2	M2S	156	163	160	428.5	119	15	498.5	18	129	146	134	119
C 12 2	S3	M3S	195	182.5	179.5	471.5	142	20	567.5	25	160	158	160	142
C 12 2	S3	M3L	195	182.5	179.5	503.5	142	22	594.5	27	160	158	160	142

Bonfiglioli Riduttori

C 12...P (IEC)

P

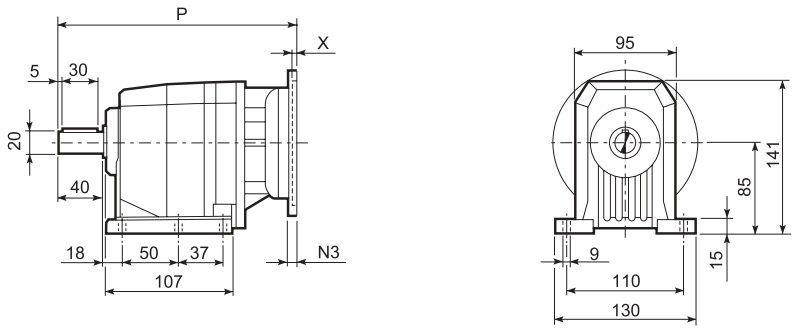

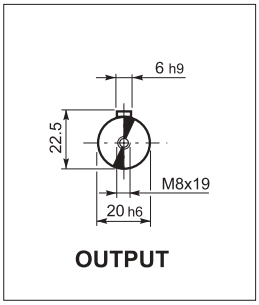

F

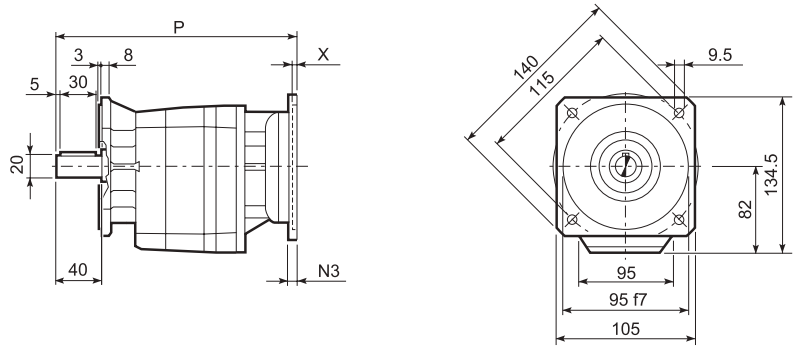

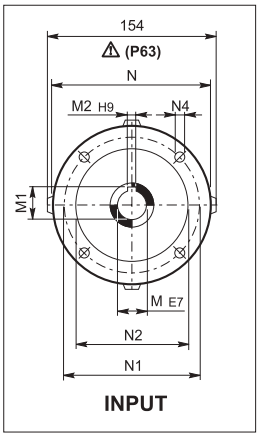

U

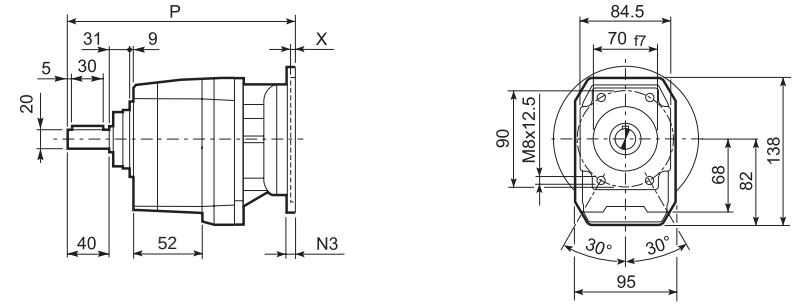

UF

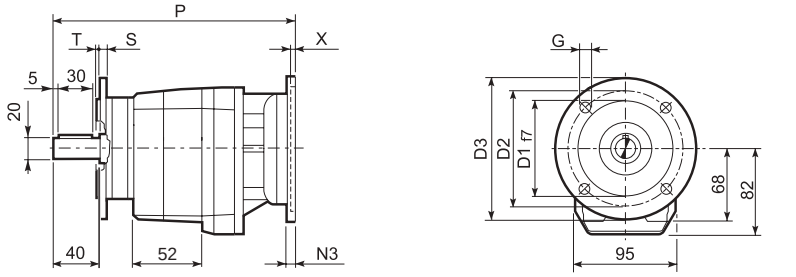

C 12 2_U						
	D1	D2	D3	G	T	S
FA	80	100	120	7	3	8
FB	95	115	140	9	3	10
FC	110	130	160	9	3	10

		M	M1	M2	N	N1	N2	N3	N4	X	P	
C 12 2	P63	11	12.8	4	140	115	95	—	M8x19	4	244.5	6
C 12 2	P71	14	16.3	5	160	130	110	—	M8x16	4.5	244.5	6
C 12 2	P80	19	21.8	6	200	165	130	—	M10x14.5	4	264	7
C 12 2	P90	24	27.3	8	200	165	130	—	M10x14.5	4	264	7
C 12 2	P100	28	31.3	8	250	215	180	—	M12x16	4.5	274	11
C 12 2	P112	28	31.3	8	250	215	180	—	M12x16	4.5	274	11

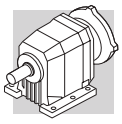

C 12...SK / SC

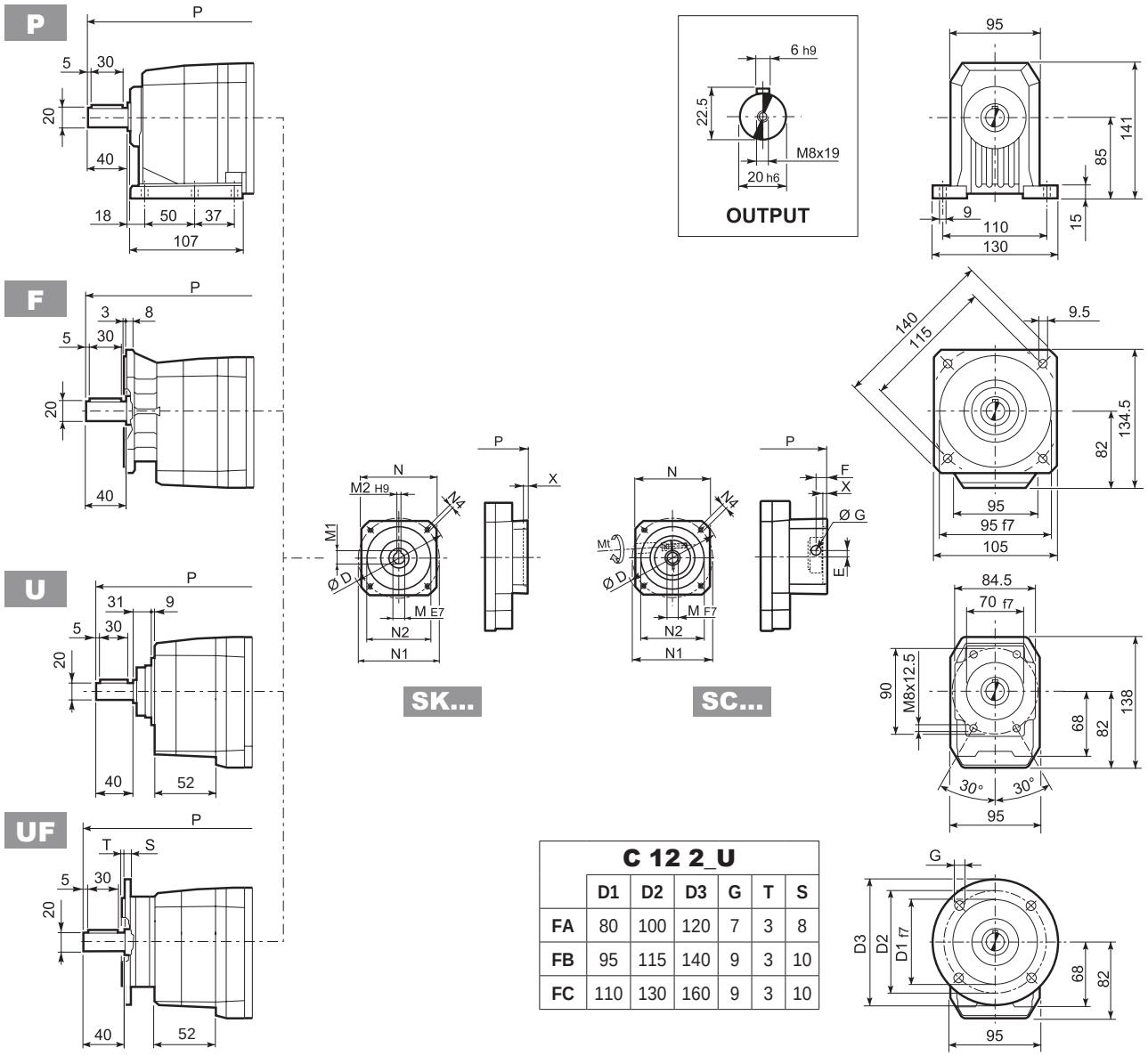

C 12 2_U	D1	D2	D3	G	T	S
FA	80	100	120	7	3	8
FB	95	115	140	9	3	10
FC	110	130	160	9	3	10

		D	M	M1	M2	N	N1	N2	N4	X	P	
C 12 2	SK60A	102	11	12.8	4	82	75	60	M5x10	3.5	216	6
C 12 2	SK60B	102	14	16.3	5	82	75	60	M5x10	4	223	5
C 12 2	SK80A	115	14	16.3	5	90	100	80	M6x12	4	223	5
C 12 2	SK80C	120	19	21.8	6	96	100	80	M6x12	4	264	7
C 12 2	SK95A	130	14	16.3	5	102	115	95	M8x12	4	264	6
C 12 2	SK95B	130	19	21.8	6	102	115	95	M8x12	4	264	7
C 12 2	SK95C	130	24	27.3	8	102	115	95	M8x12	4	264	7
C 12 2	SK110A	150	19	21.8	6	120	130	110	M8x12	5	264	7
C 12 2	SK110B	150	24	27.3	8	120	130	110	M8x12	5	264	7

			Mt [Nm]	D	E	F	G	M	N	N1	N2	N4	X	P	
C 12 2	SC60A	M6	15	102	7	12.5	12.5	11	82	75	60	M5x10	4	243	7
C 12 2	SC60B	M6	15	102	7	12.5	12.5	14	82	75	60	M5x10	4	243	6
C 12 2	SC80A	M6	15	115	6	12.5	12.5	14	90	100	80	M6x12	4	243	6
C 12 2	SC80C	M6	15	120	15.5	14.5	17.75	19	96	100	80	M6x12	4	287.5	8
C 12 2	SC95A	M6	15	130	16.5	15	17.75	14	102	115	95	M8x16	4	287.5	7
C 12 2	SC95B	M6	15	130	16.5	15	17.75	19	102	115	95	M8x16	4	287.5	8
C 12 2	SC95C	M6	15	130	16.5	15	17.75	24	102	115	95	M8x16	4	287.5	8
C 12 2	SC110A	M6	15	150	16.5	16	17.75	19	120	130	110	M8x16	5	287.5	10
C 12 2	SC110B	M6	15	150	16.5	16	17.75	24	120	130	110	M8x16	5	287.5	10

Bonfiglioli Riduttori

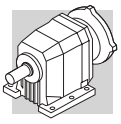

C 12...HS

P

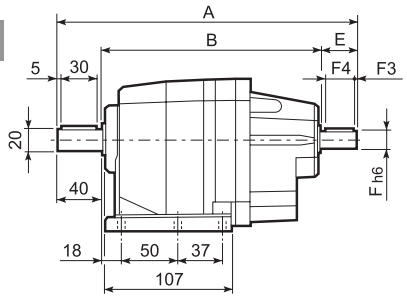

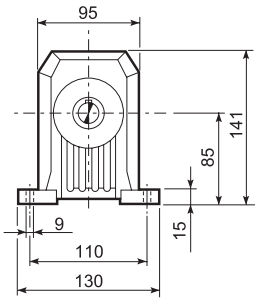

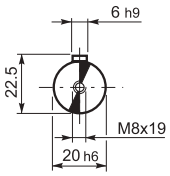

OUTPUT

F

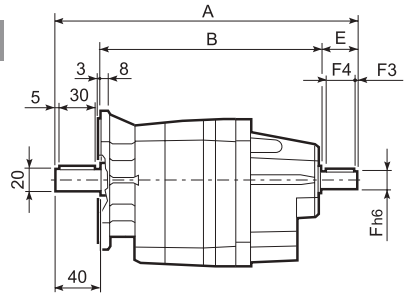

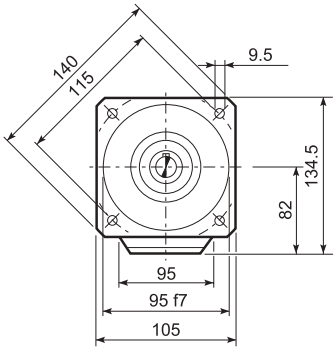

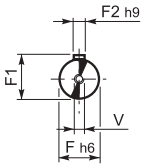

INPUT

U

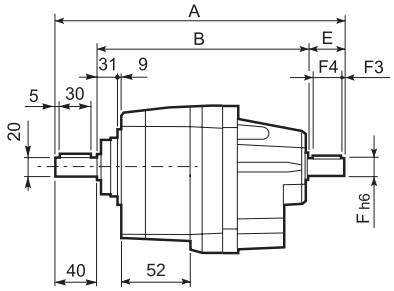

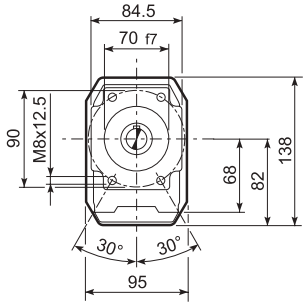

UF

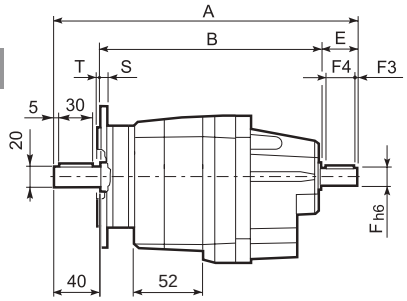

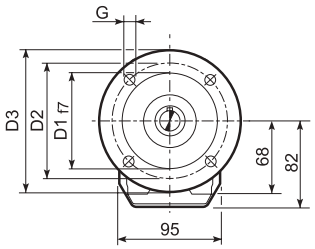

C 12 2_U						
	D1	D2	D3	G	T	S
FA	80	100	120	7	3	8
FB	95	115	140	9	3	10
FC	110	130	160	9	3	10

		A	B	E	F	F1	F2	F3	F4	V	
C 12 2	HS	251.5	171.5	40	16	18	5	2.5	35	M6x16	7.8

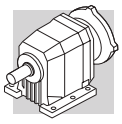

C 22...M

P

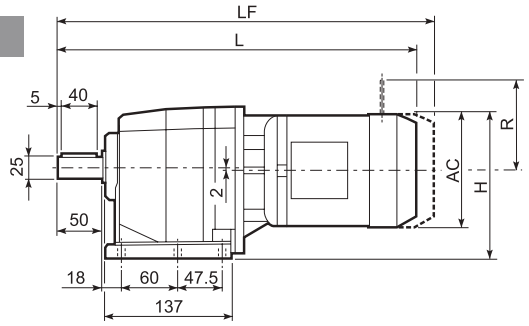

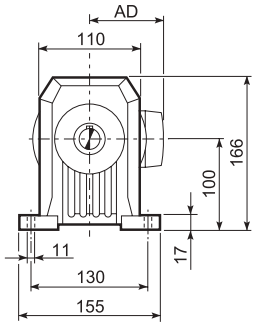

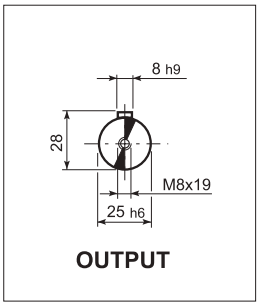

F

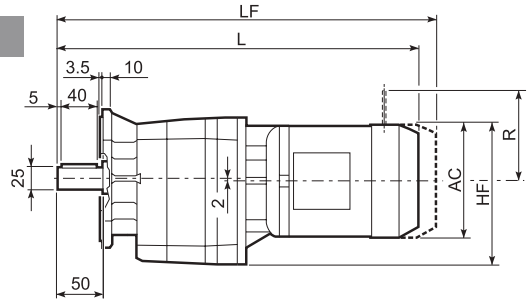

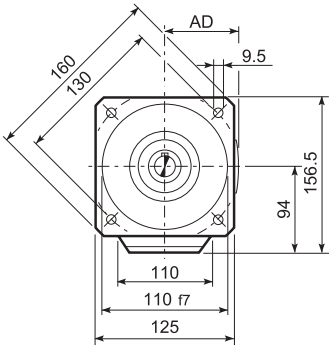

U

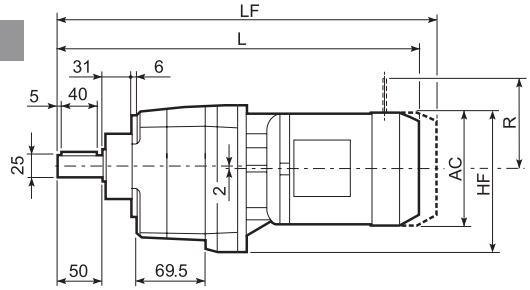

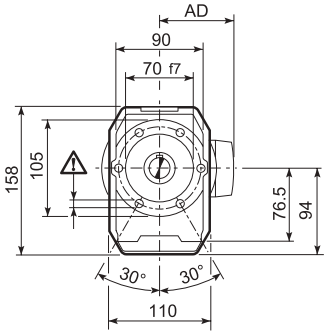

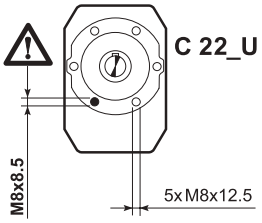

UF

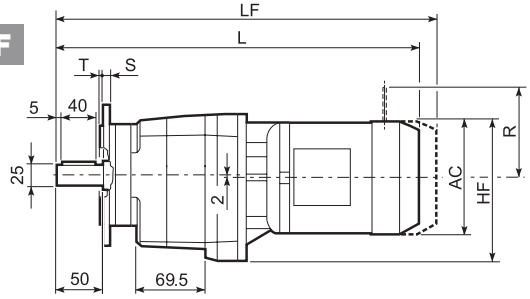

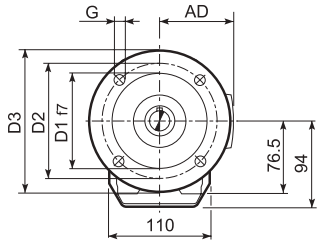

C 22_U					
	D1	D2	D3	G	T	S
FA	95	115	140	9	3	10
FB	110	130	160	9	3	10
FC	130	165	200	11	3.5	11

								M...FD M...FA		M...FD		M...FA	
			AC	H	HF	L	AD		LF		R	AD	R	AD
C 22 2	S05	M05	121	160.5	154.5	399	95	8	465	10	96	119	116	95
C 22 2	S1	M1	138	169	163	428	108	11	489	14	103	135	124	108
C 22 2	S2	M2S	156	178	170	456	119	16	527	19	129	146	134	119
C 22 2	S3	M3S	195	197.5	191.5	500	142	21	596	26	160	158	160	142
C 22 2	S3	M3L	195	197.5	191.5	532	142	27	623	32	160	158	160	142
C 22 3	S05	M05	121	160.5	154.5	454.5	95	11	520.5	12	96	122	116	95
C 22 3	S1	M1	138	169	163	483.5	108	13	544.5	15	103	135	124	108
C 22 3	S2	M2S	156	178	170	511.5	119	18	582.5	21	129	146	134	119
C 22 3	S3	M3S	195	197.5	191.5	555.5	142	23	601.5	28	160	158	160	142
C 22 3	S3	M3L	195	197.5	191.5	587.5	142	29	678.5	34	160	158	160	142

Bonfiglioli Riduttori

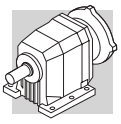

C 22...P(IEC)

P

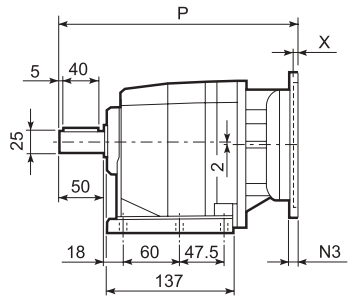

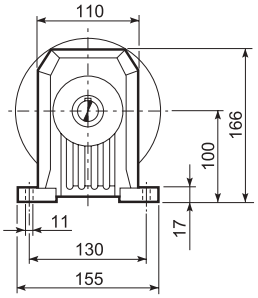

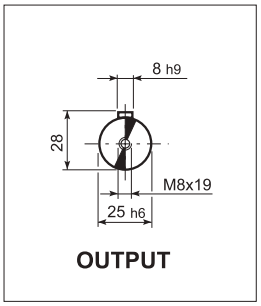

F

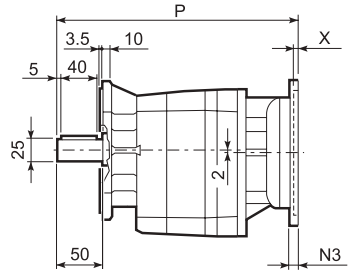

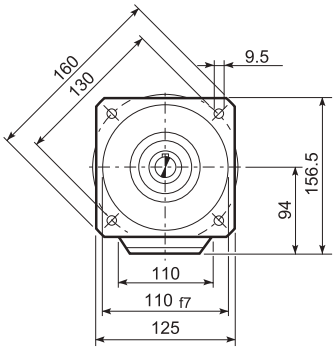

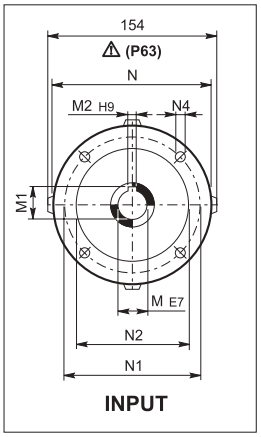

U

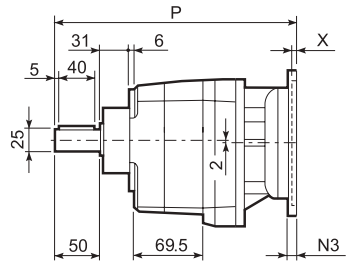

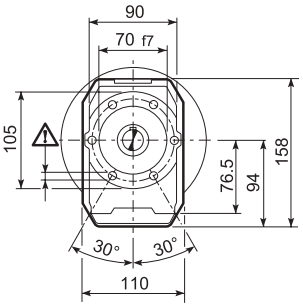

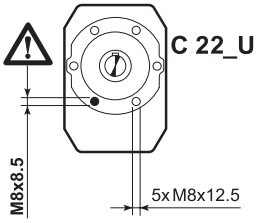

UF

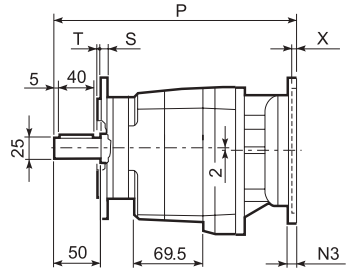

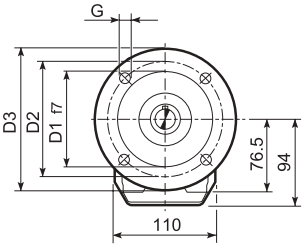

C 22_U						
	D1	D2	D3	G	T	S
FA	95	115	140	9	3	10
FB	110	130	160	9	3	10
FC	130	165	200	11	3.5	11

		M	M1	M2	N	N1	N2	N3	N4	X	P	
C 22 2	**P63**	11	12.8	4	140	115	95	—	M8x19	4	273	7
C 22 2	**P71**	14	16.3	5	160	130	110	—	M8x16	4.5	273	7
C 22 2	**P80**	19	21.8	6	200	165	130	—	M10x14.5	4	292.5	8
C 22 2	**P90**	24	27.3	8	200	165	130	—	M10x14.5	4	292.5	8
C 22 2	**P100**	28	31.3	8	250	215	180	—	M12X16	4.5	302.5	12
C 22 2	**P112**	28	31.3	8	250	215	180	—	M12X16	4.5	302.5	12
C 22 3	**P63**	11	12.8	4	140	115	95	—	M8x19	4	328.5	8
C 22 3	**P71**	14	16.3	5	160	130	110	—	M8x16	4.5	328.5	8
C 22 3	**P80**	19	21.8	6	200	165	130	—	M10x14.5	4	348	9
C 22 3	**P90**	24	27.3	8	200	165	130	—	M10x14.5	4	348	9
C 22 3	**P100**	28	31.3	8	250	215	180	—	M12x16	4.5	358	13
C 22 3	**P112**	28	31.3	8	250	215	180	—	M12x16	4.5	358	13

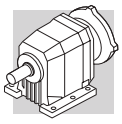

C 22...SK / SC

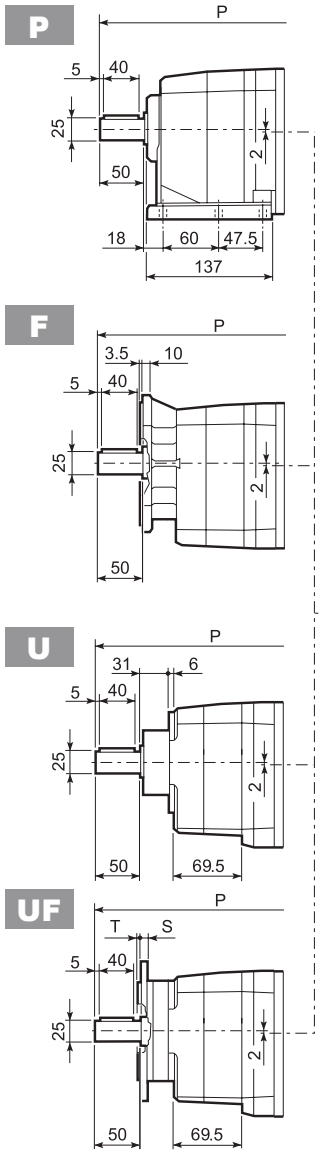

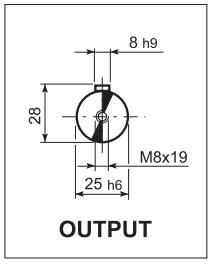

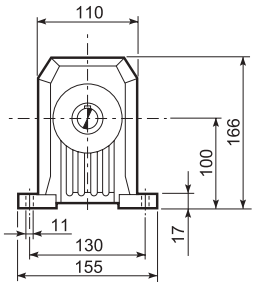

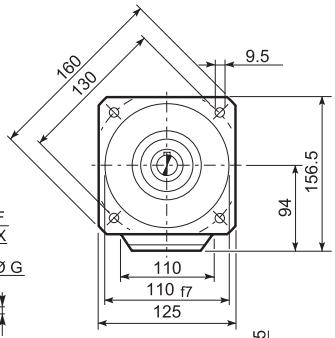

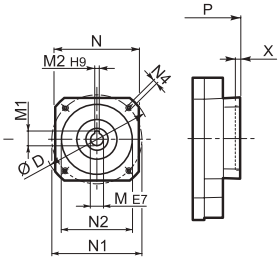

SK...

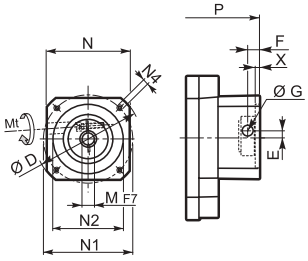

SC...

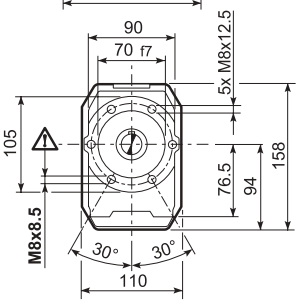

C 22_U						
	D1	D2	D3	G	T	S
FA	95	115	140	9	3	10
FB	110	130	160	9	3	10
FC	130	165	200	11	3.5	11

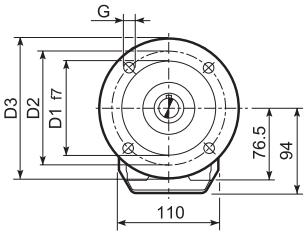

		D	M	M1	M2	N	N1	N2	N4	X	P 2x	P 3x	
C 22 2/3	SK60A*	102	11	12.8	4	82	75	60	M5x10	3.5	224.5	300	6/9
C 22 2/3	SK60B*	102	14	16.3	5	82	75	60	M5x10	4	251.5	307	7/8
C 22 2/3	SK80A*	115	14	16.3	5	90	100	80	M6x12	4	251.5	307	7/8
C 22 2/3	SK80C	120	19	21.8	6	96	100	80	M6x12	4	292.5	348	8/9
C 22 2/3	SK95A	130	14	16.3	5	102	115	95	M8x12	4	292.5	348	8/9
C 22 2/3	SK95B	130	19	21.8	6	102	115	95	M8x12	4	292.5	348	8/9
C 22 2/3	SK95C	130	24	27.3	8	102	115	95	M8x12	4	292.5	348	8/9
C 22 2/3	SK110A	150	19	21.8	6	120	130	110	M8x12	5	292.5	348	8/9
C 22 2/3	SK110B	150	24	27.3	8	120	130	110	M8x12	5	292.5	348	8/9

			Mt [Nm]	D	E	F	G	M	N	N1	N2	N4	X	P 2x	P 3x	
C 22 2/3	SC60A*	M6	15	102	7	12.5	12.5	11	82	75	60	M5x10	4	271.5	327	7/8
C 22 2/3	SC60B*	M6	15	102	7	12.5	12.5	14	82	75	60	M5x10	4	271.5	327	8/9
C 22 2/3	SC80A*	M6	15	115	6	12.5	12.5	14	90	100	80	M6x12	4	271.5	327	8/9
C 22 2/3	SC80C	M6	15	120	15.5	14.5	17.75	19	96	100	80	M6x12	4	316	371.5	9/10
C 22 2/3	SC95A	M6	15	130	16.5	15	17.75	14	102	115	95	M8x16	4	316	371.5	9/10
C 22 2/3	SC95B	M6	15	130	16.5	15	17.75	19	102	115	95	M8x16	4	316	371.5	9/10
C 22 2/3	SC95C	M6	15	130	16.5	15	17.75	24	102	115	95	M8x16	4	316	371.5	9/10
C 22 2/3	SC110A	M6	15	150	16.5	16	17.75	19	120	130	110	M8x16	5	316	371.5	10/11
C 22 2/3	SC110B	M6	15	150	16.5	16	17.75	24	120	130	110	M8x16	5	316	371.5	10/11

* Contact our technical service department advising application data

Bonfiglioli Riduttori

C 22...HS

P

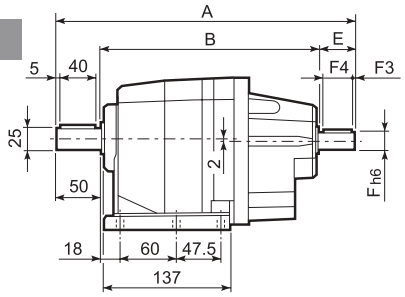

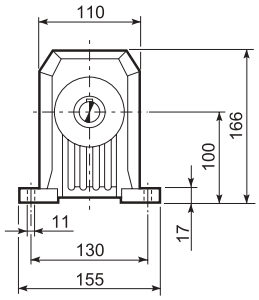

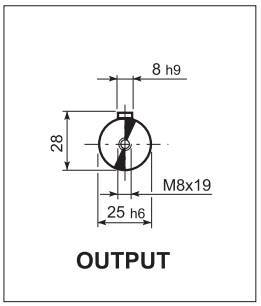

F

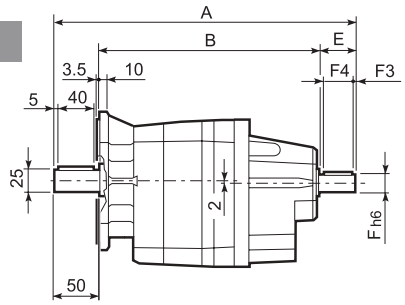

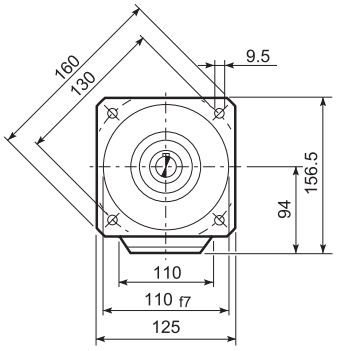

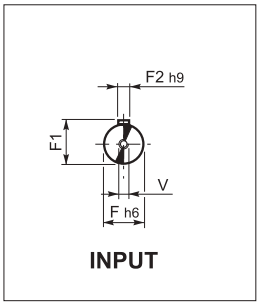

U

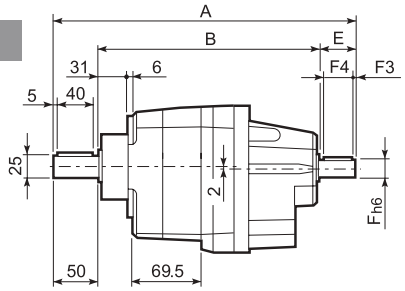

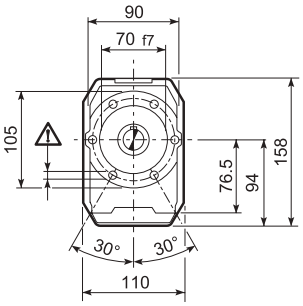

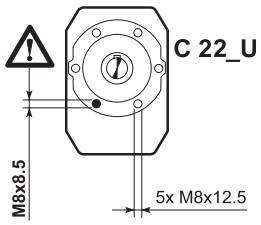

UF

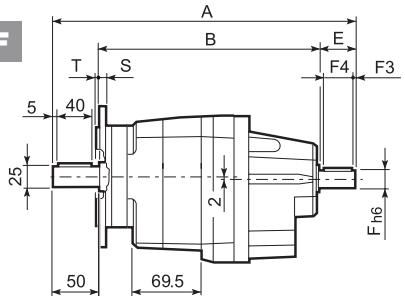

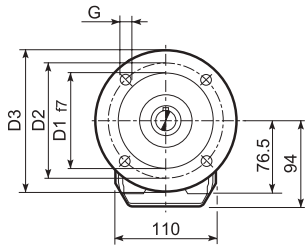

C 22_U						
	D1	D2	D3	G	T	S
FA	95	115	140	9	3	10
FB	110	130	160	9	3	10
FC	130	165	200	11	3.5	11

		A	B	E	F	F1	F2	F3	F4	V	
C 22 2	HS	323	233	40	19	21.5	6	2.5	35	M6x16	7.2
C 22 3		335.5	245.5	40	16	18	6	2.5	36	M6x16	7.5

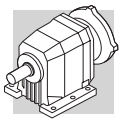

C 32...M

P

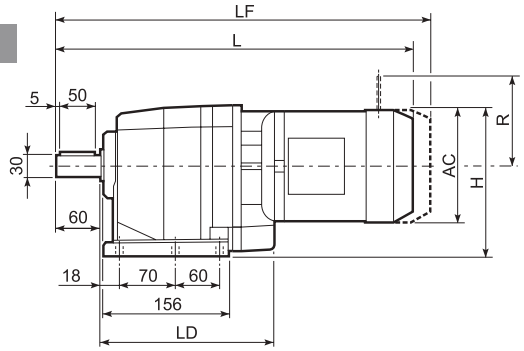

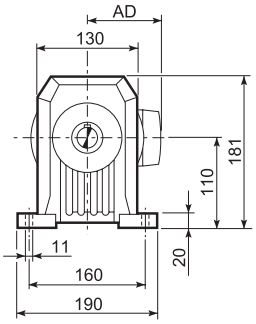

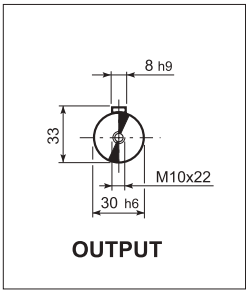

F

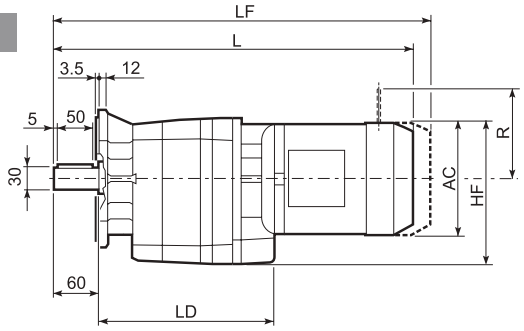

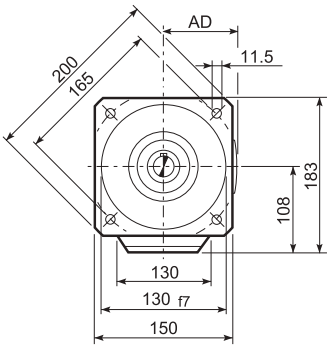

U

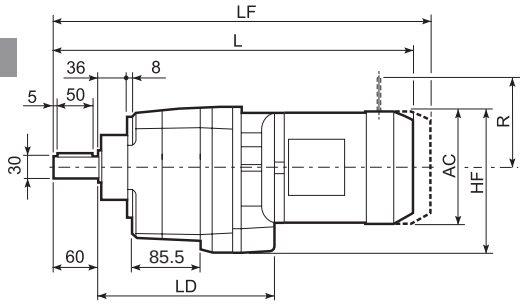

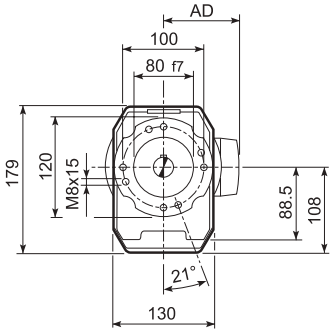

UF

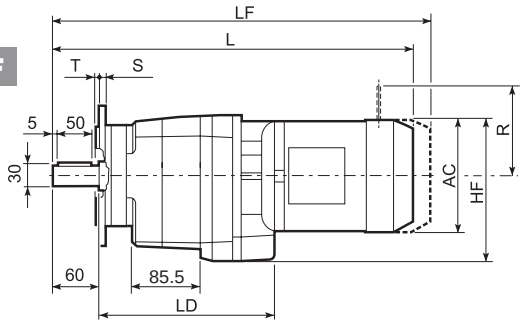

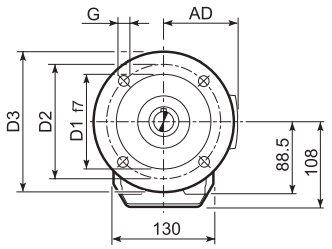

C 32_U					
	D1	D2	D3	G	T	S
FA	110	130	160	9	3	10
FB	130	165	200	11	3.5	11
FC	180	215	250	14	4	13

										M...FD M...FA		M...FD		M...FA	
			AC	H	HF	L	LD	AD		LF		R	AD	R	AD
C 32 2	S1	M1	138	179	177	462.5	205.5	108	14	523.5	16	103	135	124	108
C 32 2	S2	M2S	156	188	186	490.5	217.5	119	18	561.5	21	129	146	134	119
C 32 2	S3	M3S	195	207.5	205.5	534.5	227.5	142	23	630.5	28	160	158	160	142
C 32 2	S3	M3L	195	207.5	205.5	566.5	227.5	142	32	657.5	37	160	158	160	142
C 32 2	S4	M4	258	239	237	674.5	—	193	66	738.5	82	226	210	217	193
C 32 2	S4	M4LC	258	239	237	709.5	—	193	74	763.5	90	226	210	217	193
C 32 3	S05	M05	121	170.5	168.5	491	—	95	13	557	15	96	122	116	95
C 32 3	S1	M1	138	179	177	520	—	108	15	581	17	103	135	124	108
C 32 3	S2	M2S	156	188	186	548	—	119	18	619	21	129	146	134	119
C 32 3	S3	M3S	195	207.5	205.5	592	—	142	24	688	29	160	158	160	142
C 32 3	S3	M3L	195	207.5	205.5	624	—	142	33	715	38	160	158	160	142

Bonfiglioli Riduttori

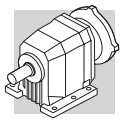

C 32...P(IEC)

P

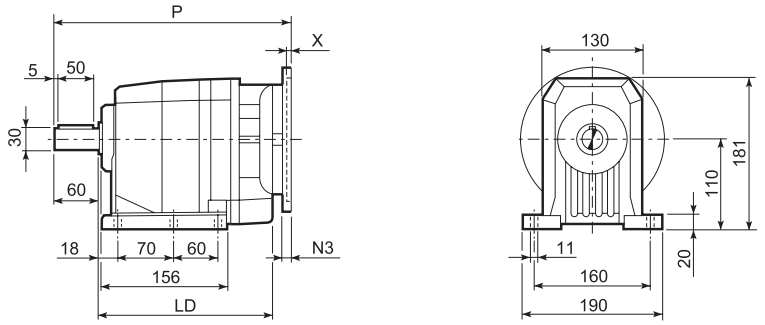

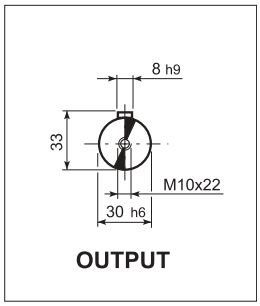

F

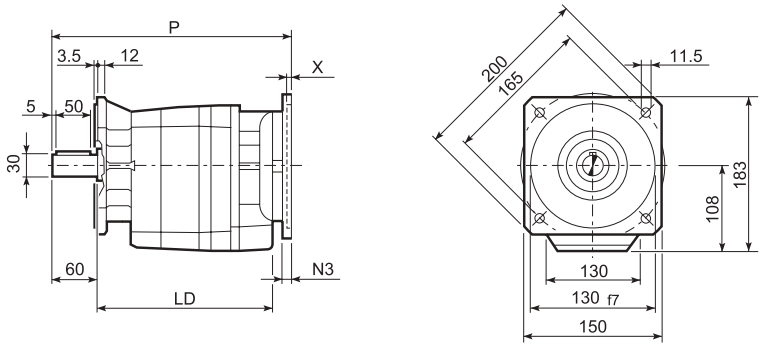

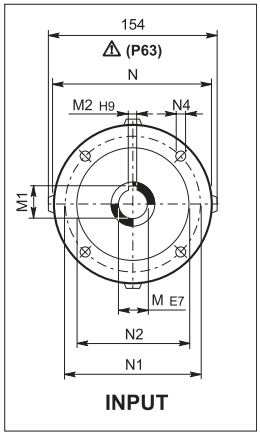

U

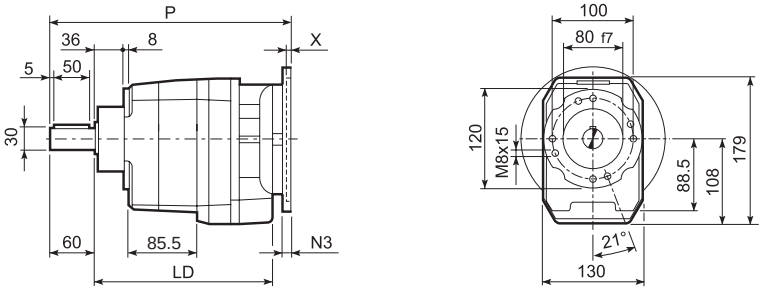

UF

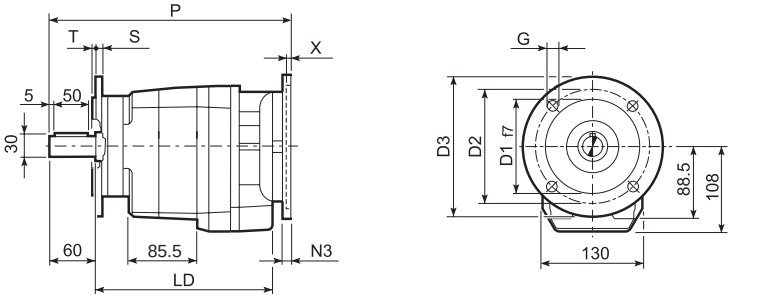

C 32_U	D1	D2	D3	G	T	S
FA	110	130	160	9	3	10
FB	130	165	200	11	3.5	11
FC	180	215	250	14	4	13

		LD	M	M1	M2	N	N1	N2	N3	N4	X	P	
C 32 2	**P63**	217.5	11	12.8	4	140	115	95	—	M8x19	4	307.5	9
C 32 2	**P71**	217.5	14	16.3	5	160	130	110	—	M8x16	4.5	307.5	9
C 32 2	**P80**	227.5	19	21.8	6	200	165	130	—	M10x14.5	4	327	10
C 32 2	**P90**	227.5	24	27.3	8	200	165	130	—	M10x14.5	4	327	10
C 32 2	**P100**	227.5	28	31.3	8	250	215	180	—	M12x16	4.5	337	14
C 32 2	**P112**	227.5	28	31.3	8	250	215	180	—	M12x16	4.5	337	14
C 32 2	**P132**	—	38	41.3	10	300	265	230	16	14	5	373	17
C 32 3	**P63**	—	11	12.8	4	140	115	95	—	M8x19	4	365	10
C 32 3	**P71**	—	14	16.3	5	160	130	110	—	M8x16	4.5	365	10
C 32 3	**P80**	—	19	21.8	6	200	165	130	—	M10x14.5	4	384.5	11
C 32 3	**P90**	—	24	27.3	8	200	165	130	—	M10x14.5	4	384.5	11
C 32 3	**P100**	—	28	31.3	8	250	215	180	—	M12x16	4.5	394.5	15
C 32 3	**P112**	—	28	31.3	8	250	215	180	—	M12x16	4.5	394.5	15

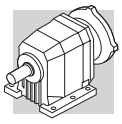

C 32...SK / SC

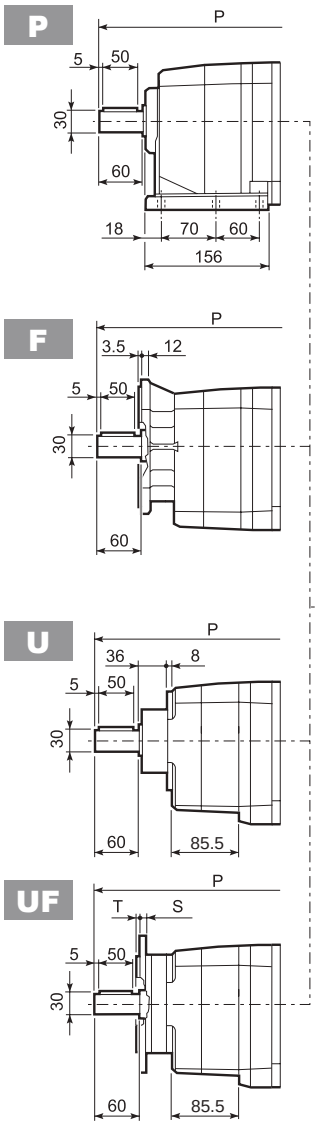

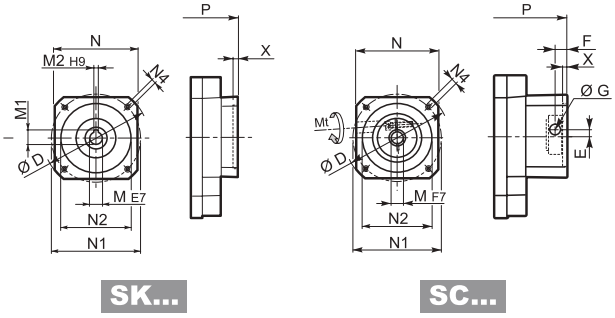

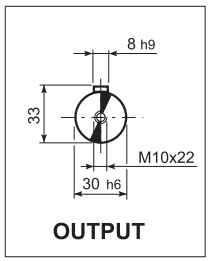

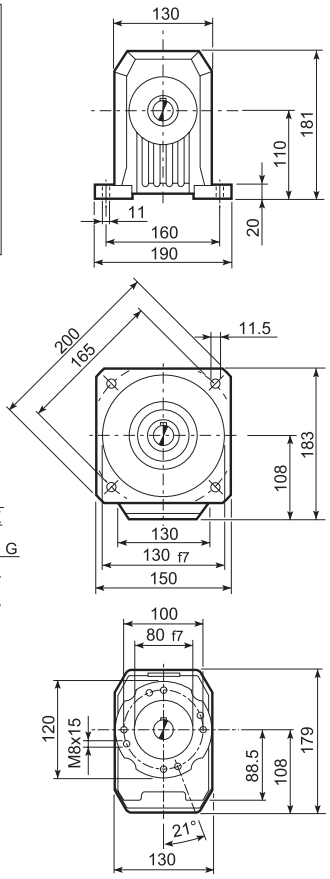

C 32_U						
	D1	D2	D3	G	T	S
FA	110	130	160	9	3	10
FB	130	165	200	11	3.5	11
FC	180	215	250	14	4	13

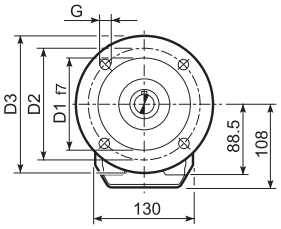

		D	M	M1	M2	N	N1	N2	N4	X	P 2x	P 3x	
C 32 2/3	SK60A	102	11	12.8	4	82	75	60	M5x10	3.5	279	336.5	8/9
C 32 2/3	SK60B	102	14	16.3	5	82	75	60	M5x10	4	286	343.5	9/10
C 32 2/3	SK80A	115	14	16.3	5	90	100	80	M6x12	4	286	343.5	9/10
C 32 2/3	SK80C	120	19	21.8	6	96	100	80	M6x12	4	327	384.5	10/11
C 32 2/3	SK95A	130	14	16.3	5	102	115	95	M8x12	4	327	384.5	10/11
C 32 2/3	SK95B	130	19	21.8	6	102	115	95	M8x12	4	327	384.5	10/11
C 32 2/3	SK95C	130	24	27.3	8	102	115	95	M8x12	4	327	384.5	10/11
C 32 2/3	SK110A	150	19	21.8	6	120	130	110	M8x12	5	327	384.5	10/11
C 32 2/3	SK110B	150	24	27.3	8	120	130	110	M8x12	5	327	384.5	10/11
C 32 2	SK130A	188	24	27.3	8	142	165	130	M10x20	5	327	—	11

			Mt [Nm]	D	E	F	G	M	N	N1	N2	N4	X	P 2x	P 3x	
C 32 2/3	SC60A	M6	15	102	7	12.5	12.5	11	82	75	60	M5x10	4	306	363.5	9/10
C 32 2/3	SC60B	M6	15	102	7	12.5	12.5	14	82	75	60	M5x10	4	306	363.5	10/11
C 32 2/3	SC80A	M6	15	115	6	12.5	12.5	14	90	100	80	M6x12	4	306	363.5	10/11
C 32 2/3	SC80C	M6	15	120	15.5	14.5	17.75	19	96	100	80	M6x12	4	350.5	408	11/12
C 32 2/3	SC95A	M6	15	130	16.5	15	17.75	14	102	115	95	M8x16	4	350.5	408	11/12
C 32 2/3	SC95B	M6	15	130	16.5	15	17.75	19	102	115	95	M8x16	4	350.5	408	11/12
C 32 2/3	SC95C	M6	15	130	16.5	15	17.75	24	102	115	95	M8x16	4	350.5	408	11/12
C 32 2/3	SC 110A	M6	15	150	16.5	16	17.75	19	120	130	110	M8x16	5	350.5	408	12/13
C 32 2/3	SC 110B	M6	15	150	16.5	16	17.75	24	120	130	110	M8x16	5	350.5	408	12/13
C 32 2	SC 130A	M6	15	188	19	16	17.75	24	142	165	130	M10x20	5	350.5	—	13

Bonfiglioli Riduttori

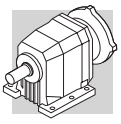

C 32...HS

P

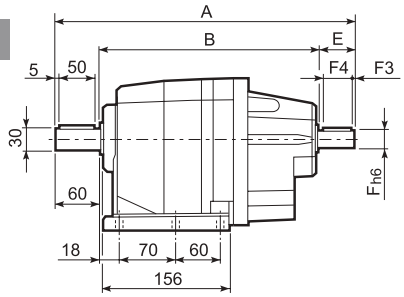

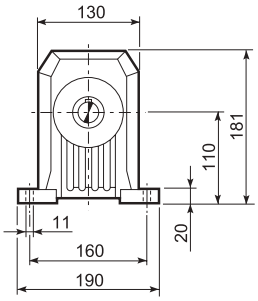

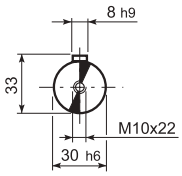

OUTPUT

F

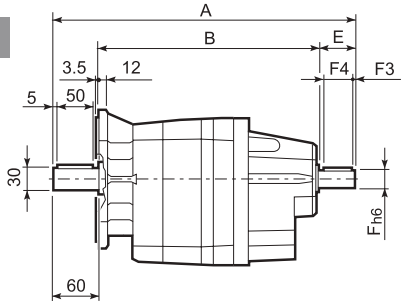

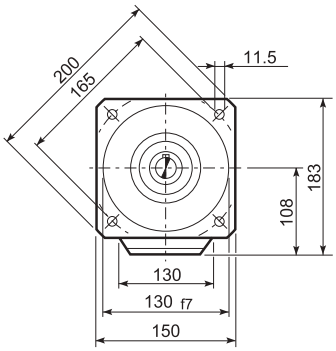

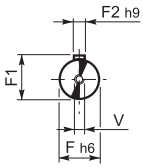

INPUT

U

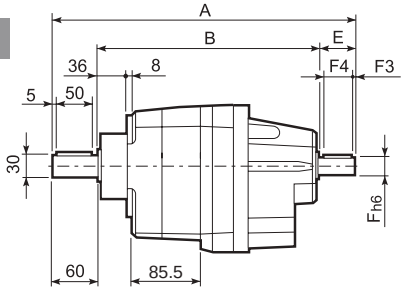

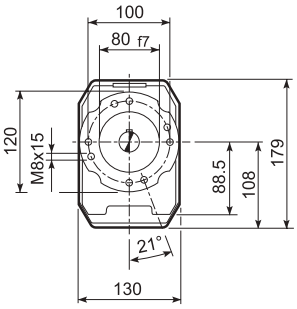

UF

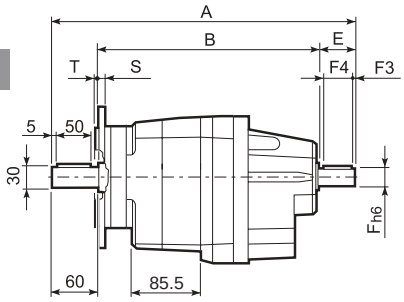

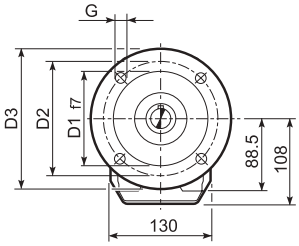

C 32_U						
	D1	D2	D3	G	T	S
FA	110	130	160	9	3	10
FB	130	165	200	11	3.5	11
FC	180	215	250	14	4	13

		A	B	E	F	F1	F2	F3	F4	V	
C 32 2	HS	357.5	257.5	40	19	21.5	6	2.5	35	M6x16	11.1
C 32 3		372	272	40	16	18	5	2.5	35	M6x16	10.6

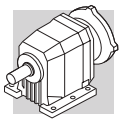

C 36...M

P

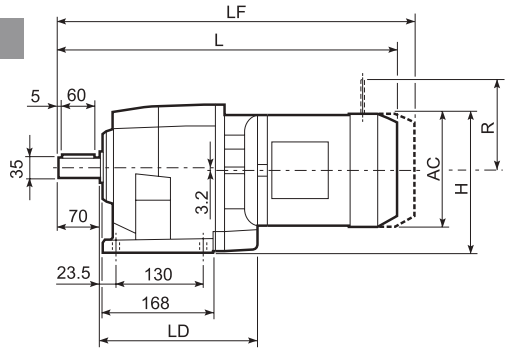

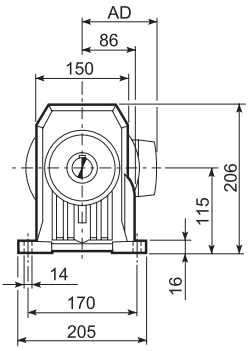

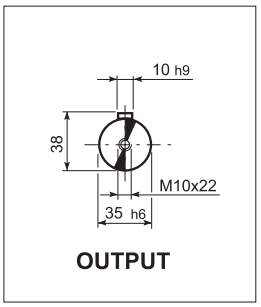

U

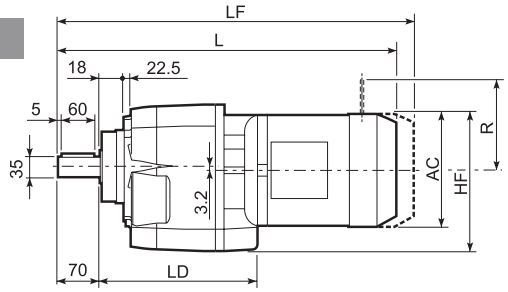

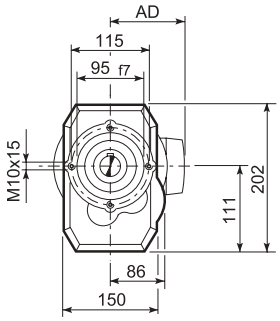

UF

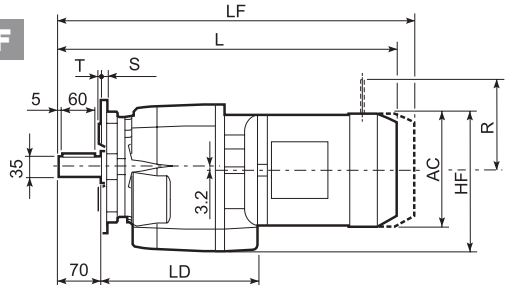

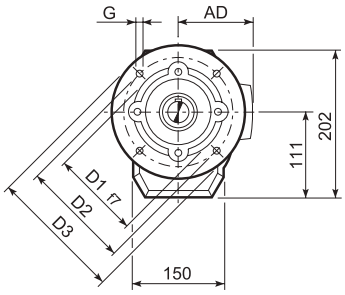

C 36_U						
	D1	D2	D3	G	T	S
FA	130	165	200	11	3.5	11
FB	180	215	250	14	4	14

										M...FD M...FA		M...FD		M...FA	
			AC	H	HF	L	LD	AD		LF		R	AD	R	AD
C 36 2/3	S1	M1	138	184	177	481	214	108	20	542	21	103	135	124	108
C 36 2/3	S2	M2S	156	193	186	509	226	119	23	580	27	129	146	134	119
C 36 2/3	S3	M3S	195	212.5	205.5	553	236	142	28	649	33	160	158	160	142
C 36 2/3	S3	M3L	195	212.5	205.5	585	236	142	37	676	42	160	158	160	142
C 36 2/3	S4	M4	258	244	240	693.5	—	193	71	802.5	87	226	210	217	193
C 36 2/3	S4	M4LC	258	244	240	728.5	—	193	79	827.5	95	226	210	217	193
C 36 4	S05	M05	121	175.5	168.5	509.5	—	95	19	575.5	20	96	122	116	95
C 36 4	S1	M1	138	184	177	538.5	—	108	21	599.5	22	103	135	124	108
C 36 4	S2	M2S	156	193	186	566.5	—	119	24	637.5	28	129	146	134	119
C 36 4	S3	M3S	195	212.5	205.5	610.5	—	142	29	706.5	34	160	158	160	142
C 36 4	S3	M3L	195	212.5	205.5	642.5	—	142	38	733.5	43	160	158	160	142

Bonfiglioli Riduttori

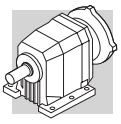

C 36...P(IEC)

P

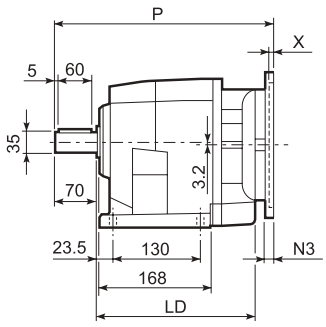

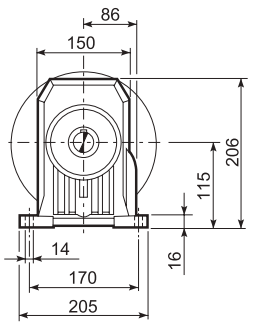

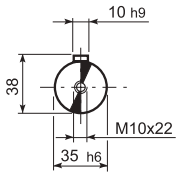

OUTPUT

U

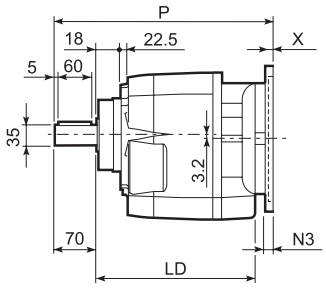

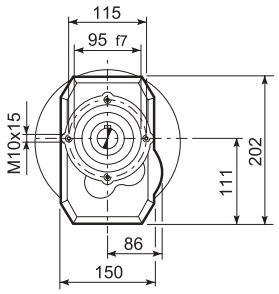

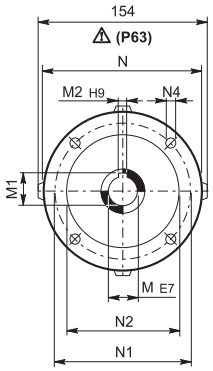

INPUT

UF

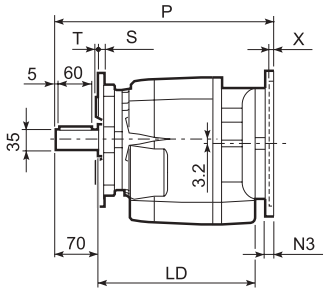

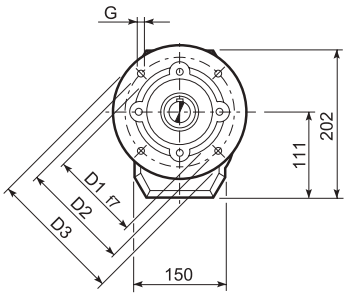

C 36_U						
	D1	D2	D3	G	T	S
FA	130	165	200	11	3.5	11
FB	180	215	250	14	4	14

		LD	M	M1	M2	N	N1	N2	N3	N4	X	P	
C 36 2/3	P63	226	11	12.8	4	140	115	95	—	M8x19	4	326	17
C 36 2/3	P71	226	14	16.3	5	160	130	110	—	M8x16	4.5	326	17
C 36 2/3	P80	236	19	21.8	6	200	165	130	—	M10x14.5	4	345.5	18
C 36 2/3	P90	236	24	27.3	8	200	165	130	—	M10x14.5	4	345.5	18
C 36 2/3	P100	236	28	31.3	8	250	215	180	—	M12x16	4.5	355.5	22
C 36 2/3	P112	236	28	31.3	8	250	215	180	—	M12x16	4.5	355.5	22
C 36 2/3	P132	—	38	41.3	10	300	265	230	16	14	5	392.5	25
C 36 4	P63	—	11	12.8	4	140	115	95	—	M8x19	4	383.5	20
C 36 4	P71	—	14	16.3	5	160	130	110	—	M8x16	4.5	383.5	20
C 36 4	P80	—	19	21.8	6	200	165	130	—	M10x14.5	4	403	21
C 36 4	P90	—	24	27.3	8	200	165	130	—	M10x14.5	4	403	21
C 36 4	P100	—	28	31.3	8	250	215	180	—	M12x16	4.5	413	25
C 36 4	P112	—	28	31.3	8	250	215	180	—	M12x16	4.5	413	25

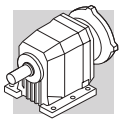

C 36...SK / SC

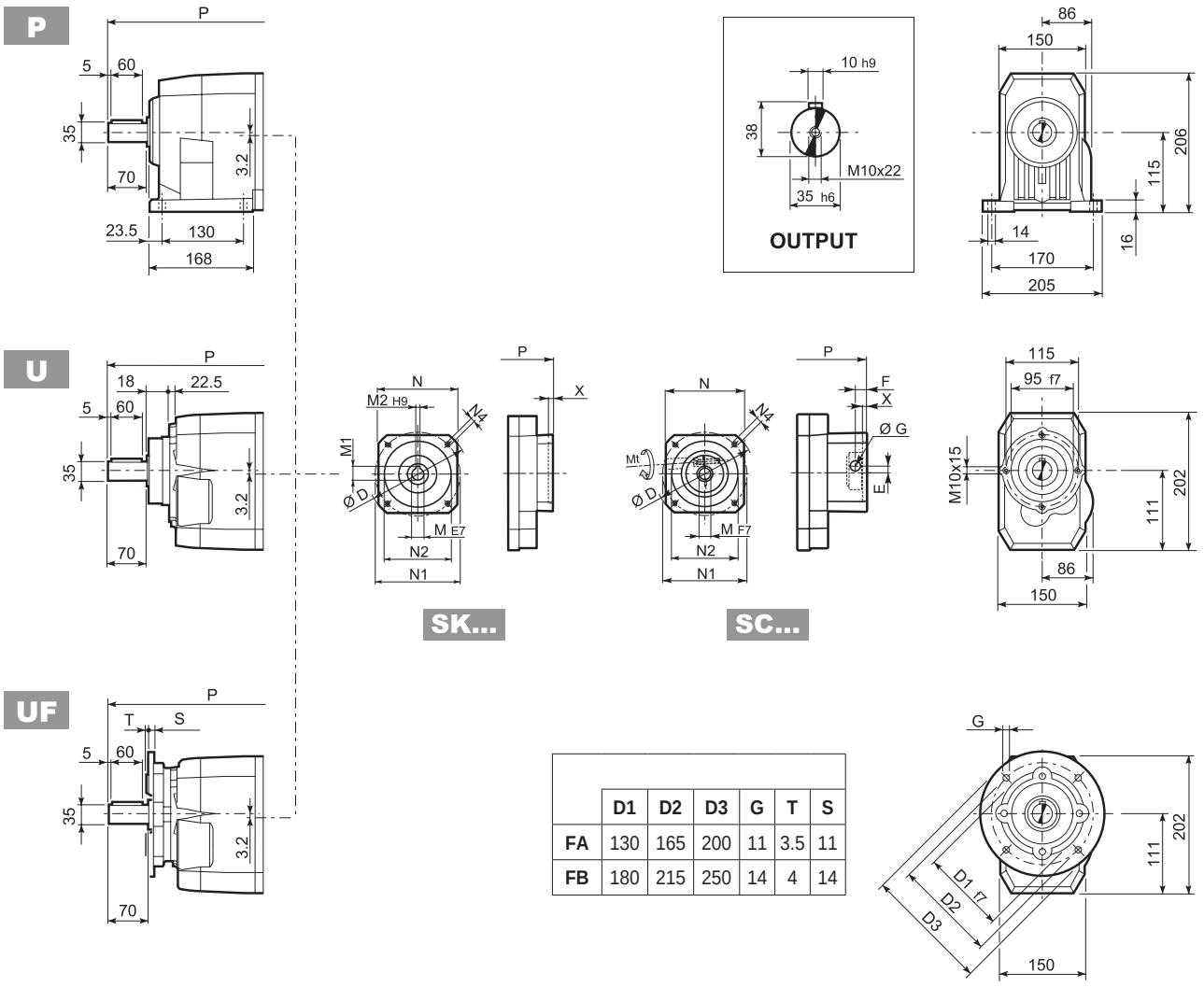

	D1	D2	D3	G	T	S
FA	130	165	200	11	3.5	11
FB	180	215	250	14	4	14

		D	M	M1	M2	N	N1	N2	N4	X	P 2/3x	P 4x	
C 36 2/3/4	**SK60A**	102	11	12.8	4	82	75	60	M5x10	3.5	297.5	355	16/16/19
C 36 2/3/4	**SK60B**	102	14	16.3	5	82	75	60	M5x10	4	304.5	362	17/17/20
C 36 2/3/4	**SK80A**	115	14	16.3	5	90	100	80	M6x12	4	304.5	362	18/18/21
C 36 2/3/4	**SK80C**	120	19	21.8	6	96	100	80	M6x12	4	304.5	403	18/18/21
C 36 2/3/4	**SK95A**	130	14	16.3	5	102	115	95	M8x12	4	345.5	403	18/18/21
C 36 2/3/4	**SK95B**	130	19	21.8	6	102	115	95	M8x12	4	345.5	403	18/18/21
C 36 2/3/4	**SK95C**	130	24	27.3	8	102	115	95	M8x12	4	345.5	403	18/18/21
C 36 2/3/4	**SK110A**	150	19	21.8	6	120	130	110	M8x12	5	345.5	403	18/18/21
C 36 2/3/4	**SK110B**	150	24	27.3	8	120	130	110	M8x12	5	345.5	403	18/18/21
C 36 2/3	**SK130A**	188	24	27.3	8	142	165	130	M10x20	5	345.5	—	19/19

			Mt [Nm]	D	E	F	G	M	N	N1	N2	N4	X	P 2/3x	P 4x	
C 36 2/3/4	**SC60A**	M6	15	102	7	12.5	12.5	11	82	75	60	M5x10	4	324.5	382	17/17/20
C 36 2/3/4	**SC60B**	M6	15	102	7	12.5	12.5	14	82	75	60	M5x10	4	324.5	382	18/18/21
C 36 2/3/4	**SC80A**	M6	15	115	6	12.5	12.5	14	90	100	80	M6x12	4	324.5	426.5	18/18/21
C 36 2/3/4	**SC80C**	M6	15	120	15.5	14.5	17.75	19	96	100	80	M6x12	4	369	426.5	19/19/22
C 36 2/3/4	**SC95A**	M6	15	130	16.5	15	17.75	14	102	115	95	M8x16	4	369	426.5	19/19/22
C 36 2/3/4	**SC95B**	M6	15	130	16.5	15	17.75	19	102	115	95	M8x16	4	369	426.5	19/19/22
C 36 2/3/4	**SC95C**	M6	15	130	16.5	15	17.75	24	102	115	95	M8x16	4	369	426.5	19/19/22
C 36 2/3/4	**SC110A**	M6	15	150	16.5	16	17.75	19	120	130	110	M8x16	5	369	426.5	21/21/24
C 36 2/3/4	**SC110B**	M6	15	150	16.5	16	17.75	24	120	130	110	M8x16	5	369	426.5	21/21/24
C 36 2/3	**SC130A**	M6	15	188	19	16	17.75	24	142	165	130	M10x20	5	369	—	22/22

Bonfiglioli Riduttori

C 36...HS

P

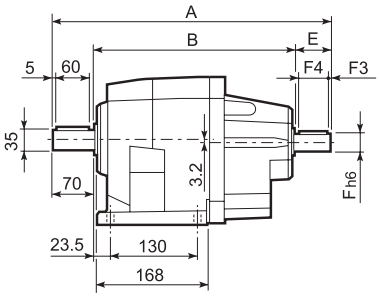

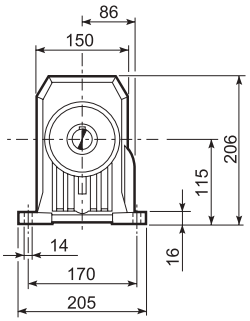

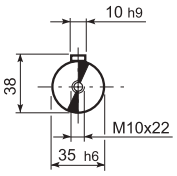

OUTPUT

U

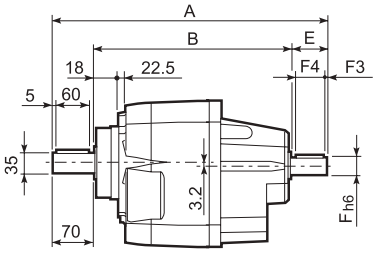

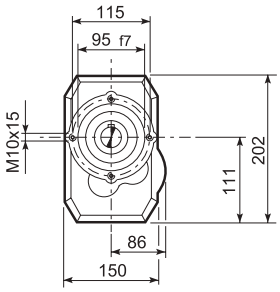

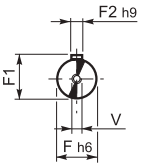

INPUT

UF

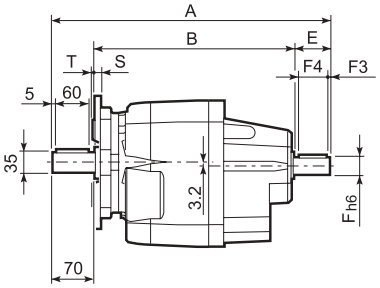

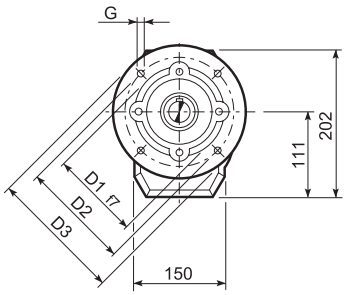

C 36_U						
	D1	D2	D3	G	T	S
FA	130	165	200	11	3.5	11
FB	180	215	250	14	4	14

		A	B	E	F	F1	F2	F3	F4	V	
C 36 2	HS	415.5	295.5	50	24	27	8	2.5	45	M8x19	25.5
C 36 3		415.5	295.5	50	24	27	8	2.5	45	M8x19	25.5
C 36 4		390.5	280.5	40	16	18	5	2.5	36	M6x16	26.5

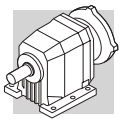

C 41...M

P

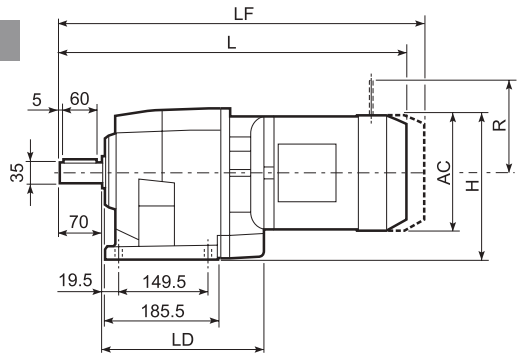

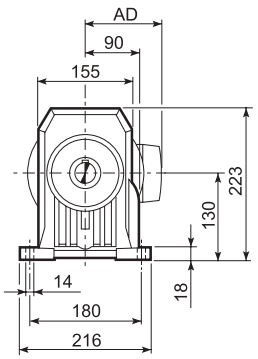

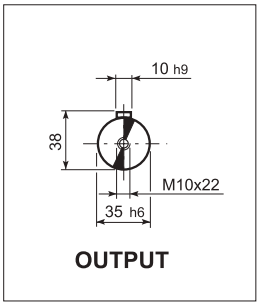

U

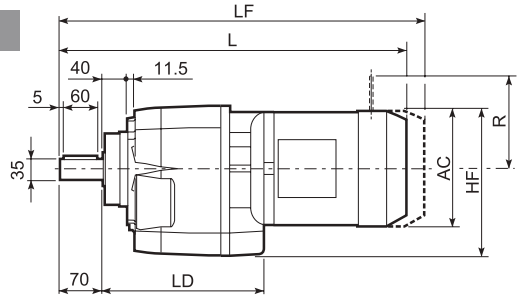

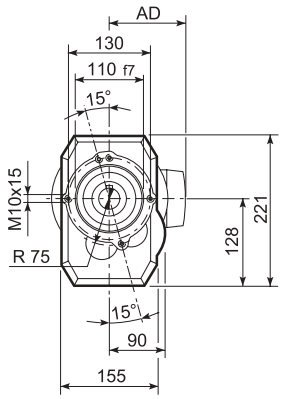

UF

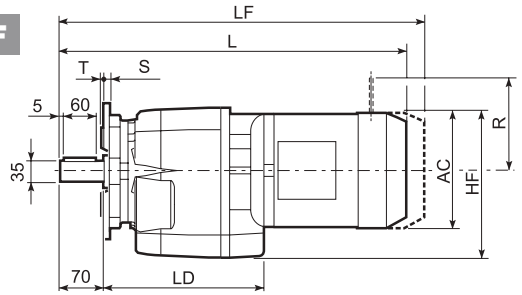

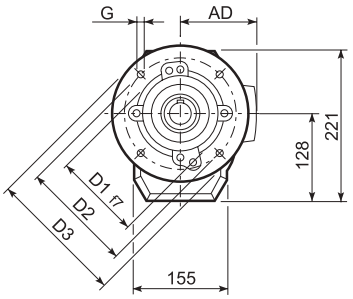

C 41_U	D1	D2	D3	G	T	S
FA	130	165	200	11	3.5	11
FB	180	215	250	14	4	13

									M...FD M...FA		M...FD		M...FA	
			AC	H	HF	L	LD	AD		LF		R	AD	R	AD
C 41 2/3	**S1**	**M1**	138	199	197	491.5	220	108	25	552.5	28	103	135	124	108
C 41 2/3	**S2**	**M2S**	156	208	206	519.5	235.5	119	31	590.5	34	129	146	134	119
C 41 2/3	**S3**	**M3S**	195	227.5	225.5	563.5	251.5	142	36	659.5	41	160	158	160	142
C 41 2/3	**S3**	**M3L**	195	227.5	225.5	595.5	251.5	142	45	686.5	50	160	158	160	142
C 41 2/3	**S4**	**M4**	258	259	257	703.5	—	193	71	812.5	83	226	210	217	193
C 41 2/3	**S4**	**M4LC**	258	259	257	739	—	193	78	838	91	226	210	217	193
C 41 4	**S05**	**M05**	231	245.5	243.5	524	—	95	27	590	28	96	122	116	95
C 41 4	**S1**	**M1**	138	199	197	553	—	108	28	614	31	103	135	124	108
C 41 4	**S2**	**M2S**	156	208	206	581	—	119	34	652	37	129	146	134	119
C 41 4	**S3**	**M3S**	195	227.5	225.5	625	—	142	39	721	44	160	158	160	142
C 41 4	**S3**	**M3L**	195	227.5	225.5	657	—	142	48	748	53	160	158	160	142

Bonfiglioli Riduttori

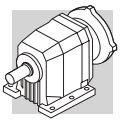

C 41...P(IEC)

P

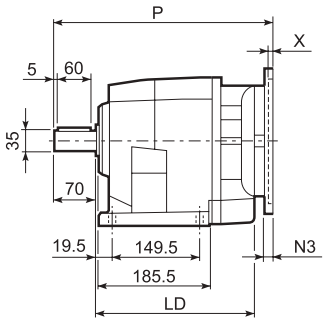

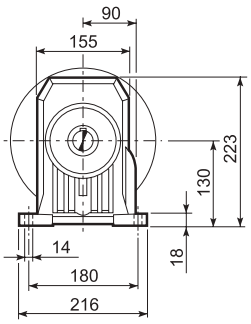

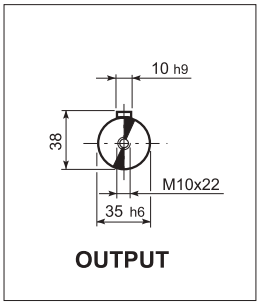

U

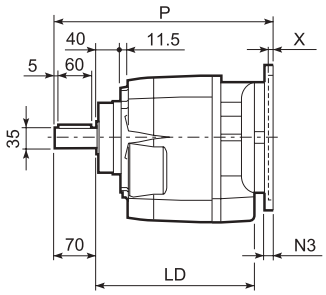

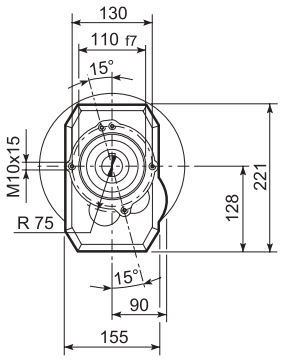

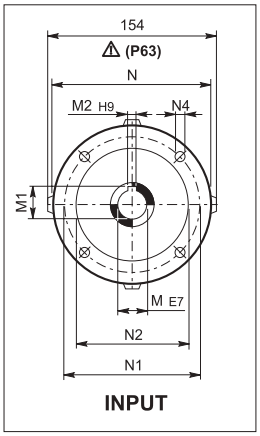

UF

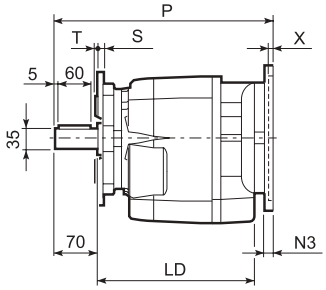

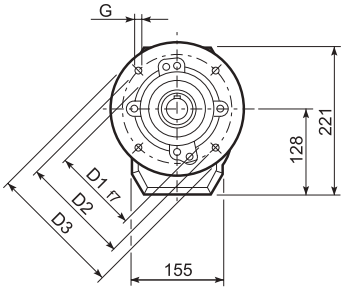

C 41_U						
	D1	D2	D3	G	T	S
FA	130	165	200	11	3.5	11
FB	180	215	250	14	4	13

		LD	M	M1	M2	N	N1	N2	N3	N4	X	P	
C 41 2/3	P63	235.5	11	12.8	4	140	115	95	—	M8x19	4	336.5	27
C 41 2/3	P71	235.5	14	16.3	5	160	130	110	—	M8x16	4.5	336.5	28
C 41 2/3	P80	251.5	19	21.8	6	200	165	130	—	M10x14.5	4	356	29
C 41 2/3	P90	251.5	24	27.3	8	200	165	130	—	M10x14.5	4	356	29
C 41 2/3	P100	—	28	31.3	8	250	215	180	—	M12x16	4.5	366	33
C 41 2/3	P112	—	28	31.3	8	250	215	180	—	M12x16	4.5	366	33
C 41 2/3	P132	—	38	41.3	10	300	265	230	16	14	5	402.5	35
C 41 4	P63	—	11	12.8	4	140	115	95	—	M8x19	4	395	30
C 41 4	P71	—	14	16.3	5	160	130	110	—	M8x16	4.5	395	31
C 41 4	P80	—	19	21.8	6	200	165	130	—	M10x14.5	4	414.5	32
C 41 4	P90	—	24	27.3	8	200	165	130	—	M10x14.5	4	414.5	32
C 41 4	P100	—	28	31.3	8	250	215	180	—	M12x16	4.5	424.5	36
C 41 4	P112	—	28	31.3	8	250	215	180	—	M12x16	4.5	424.5	36

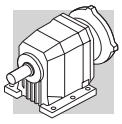

C 41...SK / SC

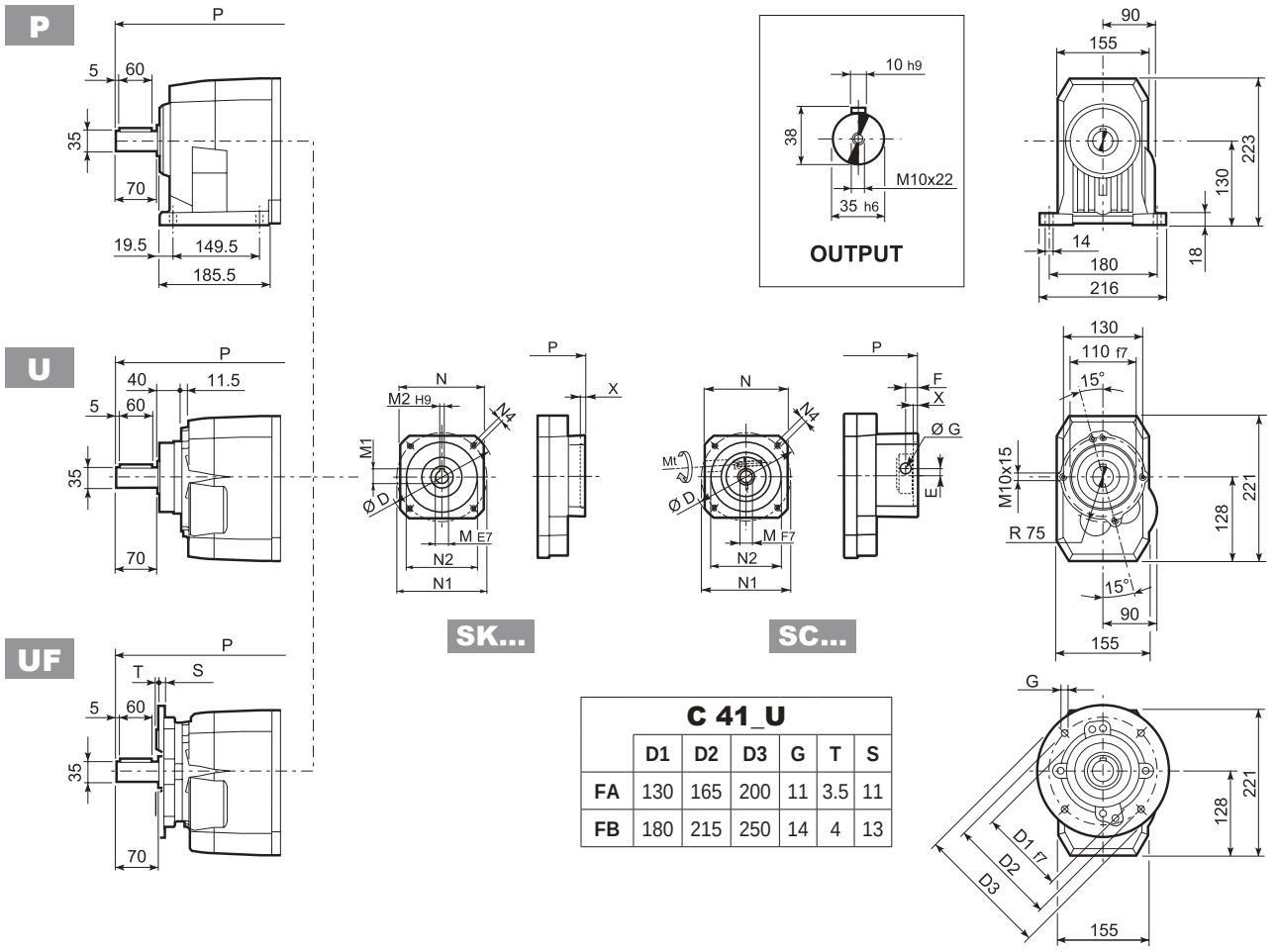

C 41_U	D1	D2	D3	G	T	S
FA	130	165	200	11	3.5	11
FB	180	215	250	14	4	13

		D	M	M1	M2	N	N1	N2	N4	X	P 2/3x	P 4x	
C41 4	SK60A	102	11	12.8	4	82	75	60	M5x10	3.5	—	370	31
C41 4	SK60B	102	14	16.3	5	82	75	60	M5x10	4	—	377	32
C41 4	SK80A	115	14	16.3	5	90	100	80	M6x12	4	—	377	32
C41 2/3	SK80B	120	14	16.3	5	96	100	80	M6x12	4	356.5	—	29/29
C41 2/3/4	SK80C	120	19	21.8	6	96	100	80	M6x12	4	356.5	418	29/29/32
C41 2/3/4	SK95A	130	14	16.3	5	102	115	95	M8x12	4	356.5	418	29/29/32
C41 2/3/4	SK95B	130	19	21.8	6	102	115	95	M8x12	4	356.5	418	29/29/33
C41 2/3/4	SK95C	130	24	27.3	8	102	115	95	M8x12	4	356.5	418	29/29/36
C41 2/3/4	SK110A	150	19	21.8	6	120	130	110	M8x12	5	356.5	418	29/29/36
C41 2/3/4	SK110B	150	24	27.3	8	120	130	110	M8x12	5	356.5	418	29/29/36
C41 2/3	SK130A	188	24	27.3	8	142	165	130	M10x20	5	356.5	—	31/31
C41 2/3	SK130B	189	32	35.3	10	160	165	130	M10x20	5	403	—	33/33
C41 2/3	SK180A	240	32	35.3	10	192	215	180	M12x19	5	403	—	33/33
C41 2/3	SK180B	240	38	41.3	10	192	215	180	M12x19	5	403	—	38/38

			Mt [Nm]	D	E	F	G	M	N	N1	N2	N4	X	P 2/3x	P 4x	
C41 4	SC60A	M6	15	102	7	12.5	12.5	11	82	75	60	M5x10	4	—	397	32
C41 4	SC60B	M6	15	102	7	12.5	12.5	14	82	75	60	M5x10	4	—	397	33
C41 4	SC80A	M6	15	115	6	12.5	12.5	14	90	100	80	M6x12	4	—	397	33
C41 2/3	SC80B	M6	15	120	15.5	14.5	17.75	14	96	100	80	M6x12	4	380	—	30/30
C41 2/3/4	SC80C	M6	15	120	15.5	14.5	17.75	19	96	100	80	M6x12	4	380	441.5	30/30/33
C41 2/3/4	SC95A	M6	15	130	16.5	15	17.75	14	102	115	95	M8x16	4	380	441.5	30/30/34
C41 2/3/4	SC95B	M6	15	130	16.5	15	17.75	19	102	115	95	M8x16	4	380	441.5	30/30/34
C41 2/3/4	SC95C	M6	15	130	16.5	15	17.75	24	102	115	95	M8x16	4	380	441.5	30/30/35
C41 2/3/4	SC110A	M6	15	150	16.5	16	17.75	19	120	130	110	M8x16	5	380	441.5	31/31/39
C41 2/3/4	SC110B	M6	15	150	16.5	16	17.75	24	120	130	110	M8x16	5	380	441.5	31/31/39
C41 2/3	SC130A	M6	15	188	19	16	17.75	24	142	165	130	M10x20	5	380	—	32/32
C41 2/3	SC130B	M8	36	189	20	17	17.75	32	160	165	130	M10x20	5	426	—	36/36
C41 2/3	SC180A	M8	36	240	20	17.5	17.75	32	192	215	180	M12x24	5	430	—	36/36
C41 2/3	SC180B	M8	36	240	20	17.5	17.75	38	192	215	180	M12x24	5	430	—	35/35

Bonfiglioli Riduttori

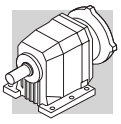

C 41...HS

P

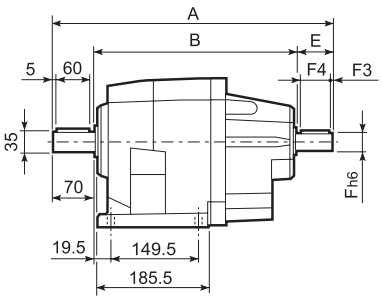

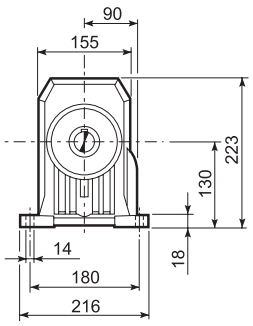

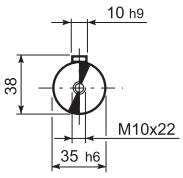

OUTPUT

U

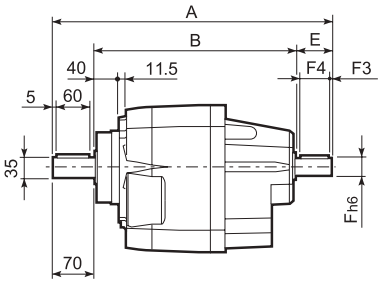

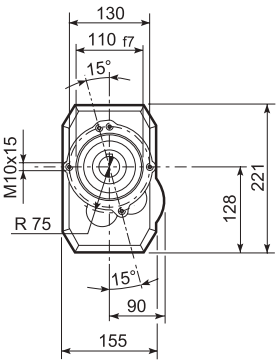

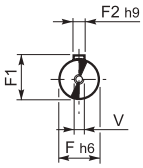

INPUT

UF

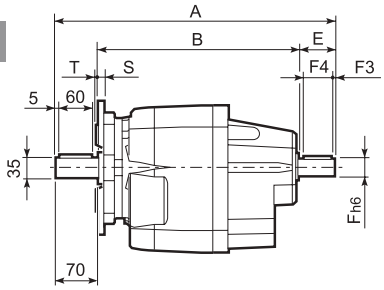

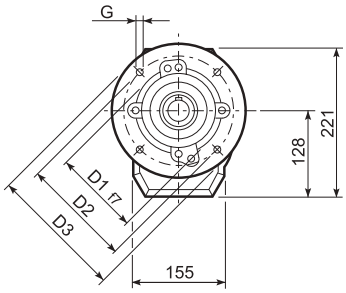

C 41_U						
	D1	D2	D3	G	T	S
FA	130	165	200	11	3.5	11
FB	180	215	250	14	4	13

		A	B	E	F	F1	F2	F3	F4	V	
C 41 2	HS	425.5	305.5	50	24	27	8	2.5	45	M8x19	30
C 41 3		425.5	305.5	50	24	27	8	2.5	45	M8x19	30
C 41 4		448	338	40	19	21.5	6	2.5	35	M6x16	33

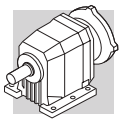

C 51...M

P

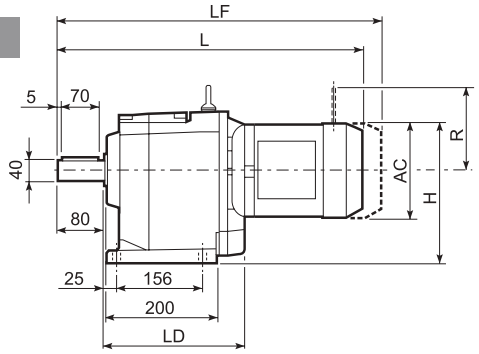

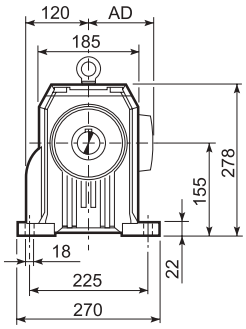

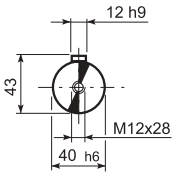

OUTPUT

U

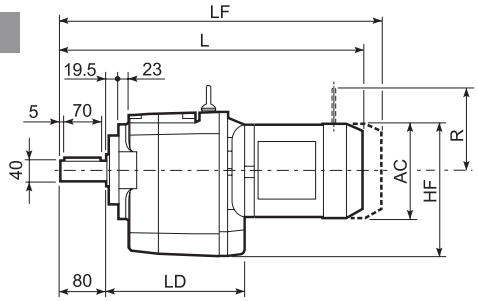

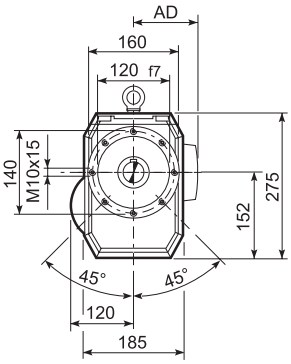

UF

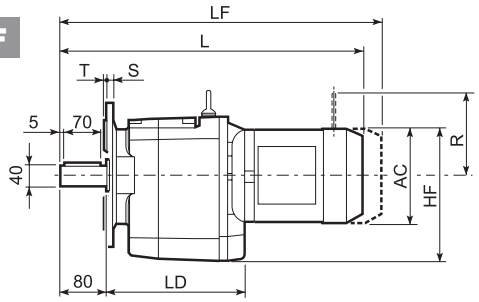

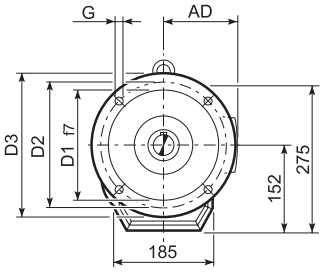

C 51_U						
	D1	D2	D3	G	T	S
FA	180	215	250	14	4	13
FB	230	265	300	14	4	16

										M...FD M...FA		M...FD		M...FA	
			AC	H	HF	L	LD	AD		LF		R	AD	R	AD
C 51 2/3	S1	M1	138	224	221	517.5	—	108	49	578.5	52	103	135	124	108
C 51 2/3	S2	M2S	156	233	230	545.5	252.5	119	53	616.5	57	129	146	134	119
C 51 2/3	S3	M3S	195	252.5	249.5	589.5	267.5	142	58	685.5	65	160	158	160	142
C 51 2/3	S3	M3L	195	252.5	249.5	621.5	267.5	142	65	712.5	72	160	158	160	142
C 51 2/3	S4	M4	258	284	281	729.5	—	193	99	838.5	117	226	210	217	193
C 51 2/3	S4	M4LC	258	284	281	764.5	—	193	107	863.5	125	226	210	217	193
C 51 2/3	S5	M5S	310	310	307	816	—	245	127	956	157	266	245	247	245
C 51 2/3	S5	M5L	310	310	307	860	—	245	143	1000	173	266	245	247	245
C 51 4	S1	M1	138	224	221	589	—	108	52	650	55	103	135	124	108
C 51 4	S2	M2S	156	233	230	617	—	119	56	688	60	129	146	134	119
C 51 4	S3	M3S	195	252.5	249.5	661	—	142	61	757	68	160	158	160	142
C 51 4	S3	M3L	195	252.5	249.5	693	—	142	68	784	75	160	158	160	142

Bonfiglioli Riduttori

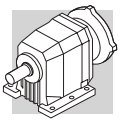

C 51...P(IEC)

P

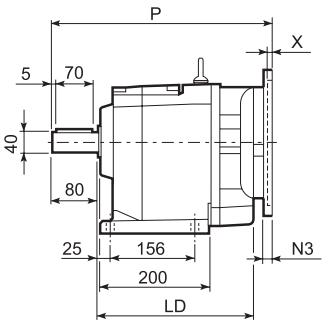

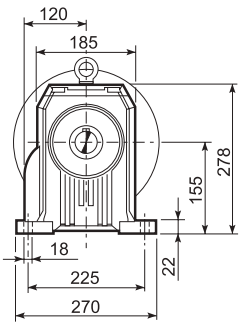

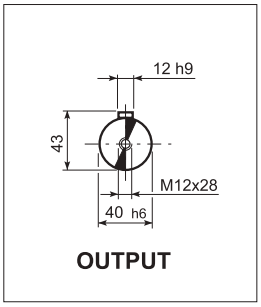

U

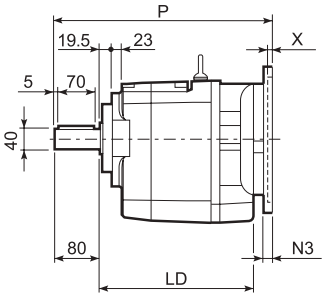

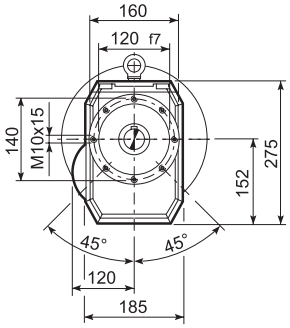

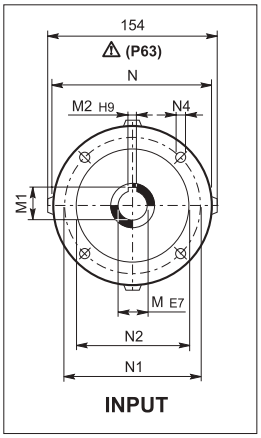

UF

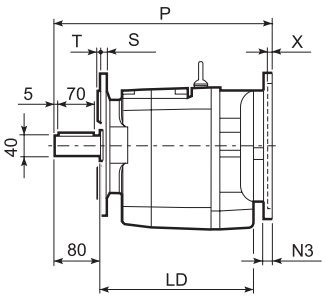

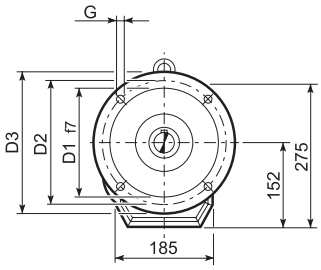

C 51_U						
	D1	D2	D3	G	T	S
FA	180	215	250	14	4	13
FB	230	265	300	14	4	16

		LD	M	M1	M2	N	N1	N2	N3	N4	X	P	
C 51 2/3	P63	252.5	11	12.8	4	140	115	95	—	M8x19	4	362.5	45
C 51 2/3	P71	252.5	14	16.3	5	160	130	110	—	M8x16	4.5	362.5	45
C 51 2/3	P80	267.5	19	21.8	6	200	165	130	—	M10x14.5	4	382	47
C 51 2/3	P90	267.5	24	27.3	8	200	165	130	—	M10x14.5	4	382	47
C 51 2/3	P100	252.5	28	31.3	8	250	215	180	—	M12x16	4.5	392	51
C 51 2/3	P112	252.5	28	31.3	8	250	215	180	—	M12x16	4.5	392	51
C 51 2/3	P132	252.5	38	41.3	10	300	265	230	16	14	5	428.5	54
C 51 2/3	P160	—	42	45.3	12	350	300	250	23	18	5.5	479	58
C 51 2/3	P180	—	48	51.8	14	350	300	250	23	18	5.5	479	58
C 51 4	P63	—	11	12.8	4	140	115	95	—	M8x19	4	434	47
C 51 4	P71	—	14	16.3	5	160	130	110	—	M8x16	4.5	434	47
C 51 4	P80	—	19	21.8	6	200	165	130	—	M10x14.5	4	453.5	49
C 51 4	P90	—	24	27.3	8	200	165	130	—	M10x14.5	4	463.5	49
C 51 4	P100	—	28	31.3	8	250	215	180	—	M12x16	4.5	463.5	53
C 51 4	P112	—	28	31.3	8	250	215	180	—	M12x16	4.5	463.5	53

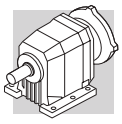

C 51...SK / SC

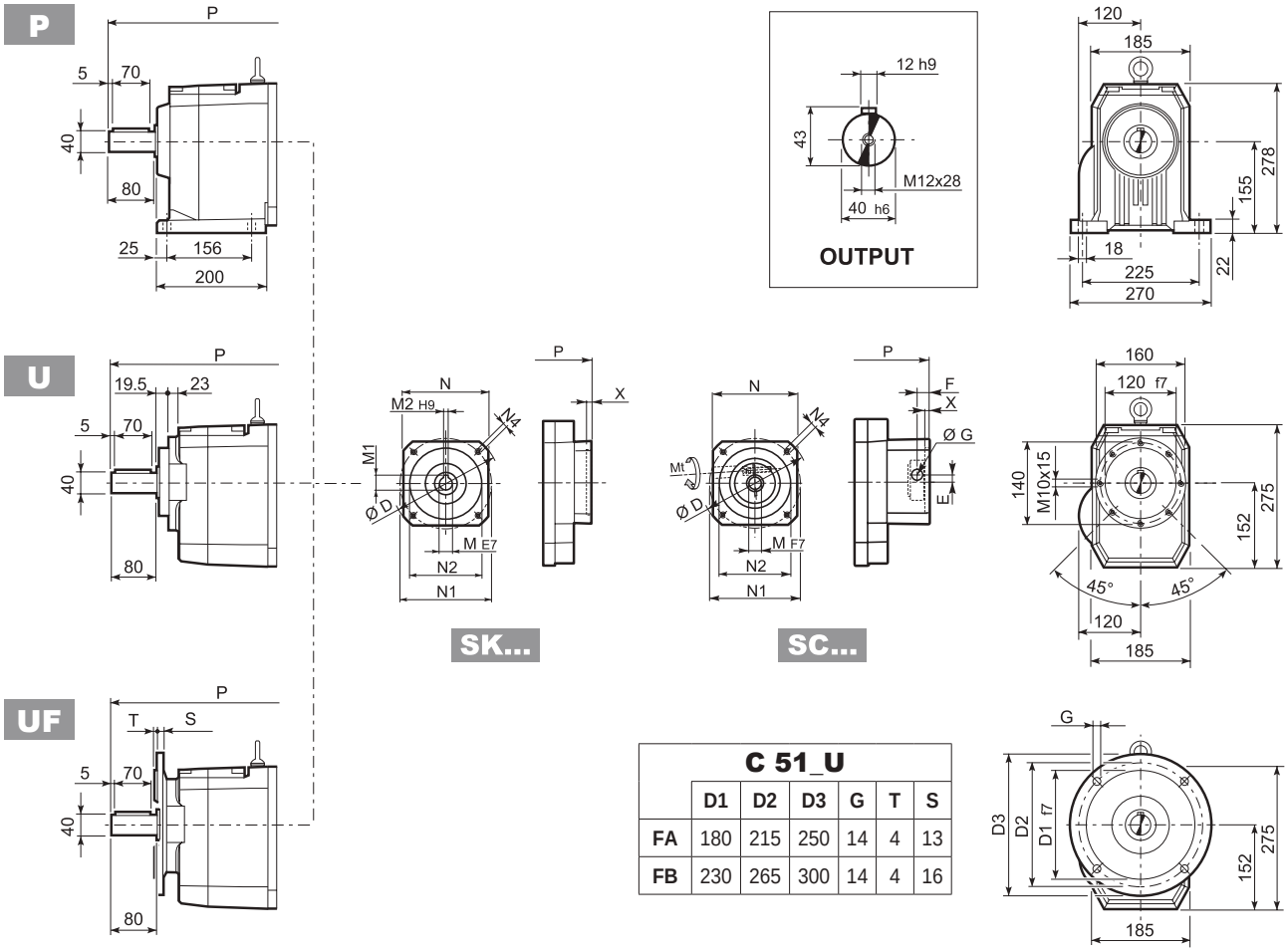

C 51_U					
	D1	D2	D3	G	T	S
FA	180	215	250	14	4	13
FB	230	265	300	14	4	16

		D	M	M1	M2	N	N1	N2	N4	X	P 2/3x	P 4x	
C 51 2/3	SK80B	120	14	16.3	5	96	100	80	M6x12	4	382	—	46/46
C 51 2/3/4	SK80C	120	19	21.8	6	96	100	80	M6x12	4	382	453.5	47/47/49
C 51 2/3/4	SK95A	130	14	16.3	5	102	115	95	M8x12	4	382	453.5	46/46/48
C 51 2/3/4	SK95B	130	19	21.8	6	102	115	95	M8x12	4	382	453.5	47/47/49
C 51 2/3/4	SK95C	130	24	27.3	8	102	115	95	M8x12	4	382	453.5	47/47/49
C 51 2/3/4	SK110A	150	19	21.8	6	120	130	110	M8x12	5	382	453.5	47/47/51
C 51 2/3/4	SK110B	150	24	27.3	8	120	130	110	M8x12	5	382	453.5	47/47/51
C 51 2/3/4	SK130A	188	24	27.3	8	142	165	130	M10x20	5	382	453.5	49/49/52
C 51 2/3	SK130B	189	32	35.3	10	160	165	130	M10x20	5	428.5	—	55/55
C 51 2/3	SK180A	240	32	35.3	10	192	215	180	M12x19	5	428.5	—	55/55
C 51 2/3	SK180B	240	38	41.3	10	192	215	180	M12x19	5	428.5	—	55/55

			Mt [Nm]	D	E	F	G	M	N	N1	N2	N4	X	P 2/3x	P 4x	
C 51 2/3	SC80B	M6	15	120	15.5	14.5	17.75	14	96	100	80	M6x12	4	405.5	—	47/47
C 51 2/3/4	SC80C	M6	15	120	15.5	14.5	17.75	19	96	100	80	M6x12	4	405.5	477	48/48/50
C 51 2/3/4	SC95A	M6	15	130	16.5	15	17.75	14	102	115	95	M8x16	4	405.5	477	47/47/49
C 51 2/3/4	SC95B	M6	15	130	16.5	15	17.75	19	102	115	95	M8x16	4	405.5	477	48/48/50
C 51 2/3/4	SC95C	M6	15	130	16.5	15	17.75	24	102	115	95	M8x16	4	405.5	477	48/48/50
C 51 2/3/4	SC110A	M6	15	150	16.5	16	17.75	19	120	130	110	M8x16	5	405.5	477	49/49/52
C 51 2/3/4	SC110B	M6	15	150	16.5	16	17.75	24	120	130	110	M8x16	5	405.5	477	49/49/52
C 51 2/3/4	SC130A	M6	15	188	19	16	17.75	24	142	165	130	M10x20	5	405.5	477	50/50/53
C 51 2/3	SC130B	M8	36	189	20	17	17.75	32	160	165	130	M10x20	5	451.5	—	54/54
C 51 2/3	SC180A	M8	36	240	20	17.5	17.75	32	192	215	180	M12x24	5	455.5	—	54/54
C 51 2/3	SC180B	M8	36	240	20	17.5	17.75	38	192	215	180	M12x24	5	455.5	—	54/54

Bonfiglioli Riduttori

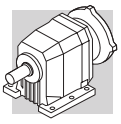

C 51...HS

P

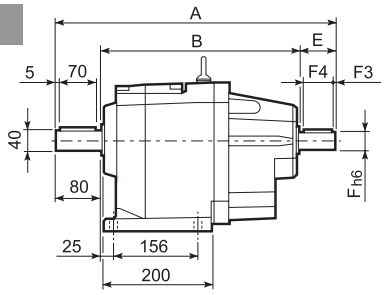

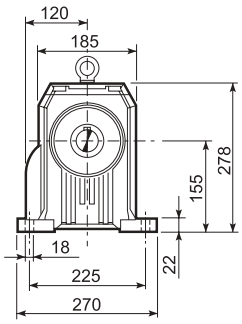

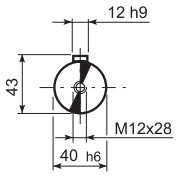

OUTPUT

U

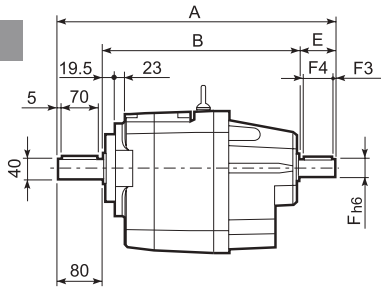

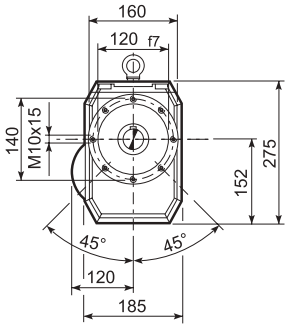

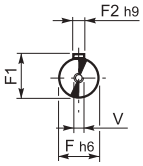

INPUT

UF

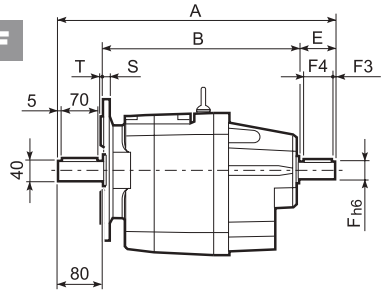

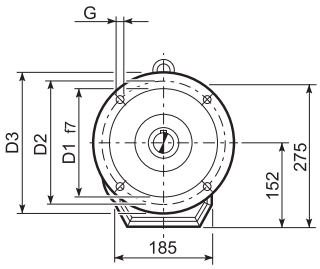

C 51_U						
	D1	D2	D3	G	T	S
FA	180	215	250	14	4	13
FB	230	265	300	14	4	16

		A	B	E	F	F1	F2	F3	F4	V	
C 51 2	HS	451.5	322	50	24	24	8	2.5	45	M8x19	45
C 51 3		451.5	322	50	24	24	8	2.5	45	M8x19	45
C 51 4		484	364	40	19	21.5	6	2.5	35	M6x16	48

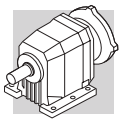

C 61...M

P

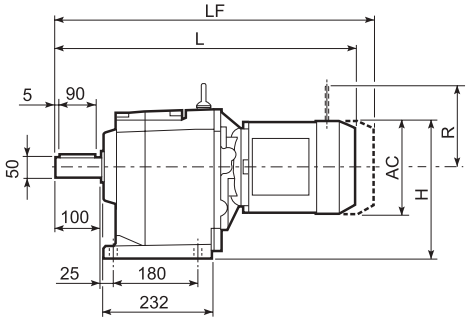

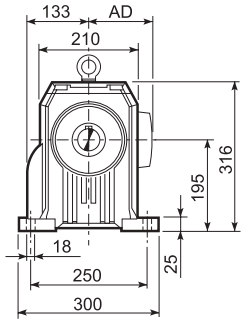

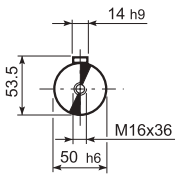

OUTPUT

U

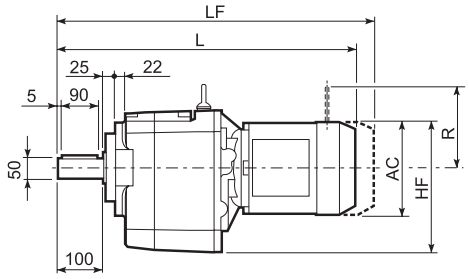

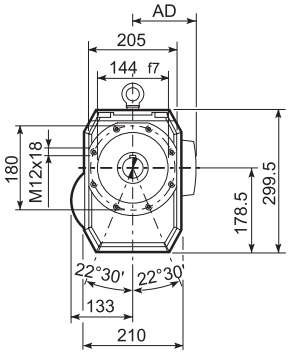

UF

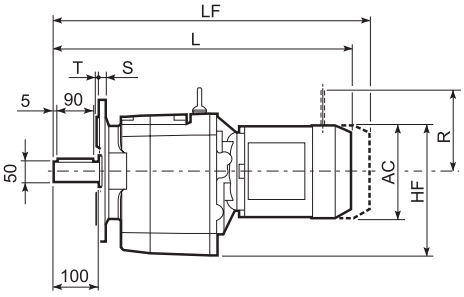

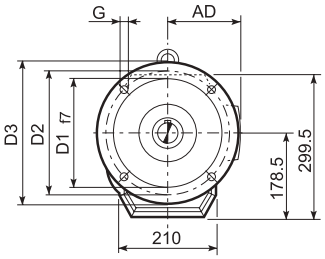

C 61_U						
	D1	D2	D3	G	T	S
FA	230	265	300	14	4	16
FB	250	300	350	18	5	18

									M...FD M...FA		M...FD		M...FA	
			AC	H	HF	L	AD		LF		R	AD	R	AD
C 61 2/3	S2	M2S	156	273	256.5	598.5	119	61	669.5	65	129	146	134	119
C 61 2/3	S3	M3S	195	292.5	276	642.5	142	66	738.5	74	160	158	160	142
C 61 2/3	S3	M3L	195	292.5	276	674.5	142	74	765.5	81	160	158	160	142
C 61 2/3	S4	M4	258	324	307.5	782.5	193	108	891.5	126	226	210	217	193
C 61 2/3	S4	M4LC	258	324	307.5	817.5	193	116	916.5	134	226	210	217	193
C 61 2/3	S5	M5S	310	350	333.5	869	245	136	1009	166	266	245	247	245
C 61 2/3	S5	M5L	310	350	333.5	913	245	152	1053	182	266	245	247	245
C 61 4	S1	M1	138	264	247.5	641	108	71	702	74	103	135	124	108
C 61 4	S2	M2S	156	273	256.5	669	119	75	740	78	129	146	134	119
C 61 4	S3	M3S	195	292.5	276	713	142	79	809	87	160	158	160	142
C 61 4	S3	M3L	195	292.5	276	745	142	87	836	94	160	158	160	142

Bonfiglioli Riduttori

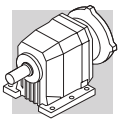

C 61...P(IEC)

P

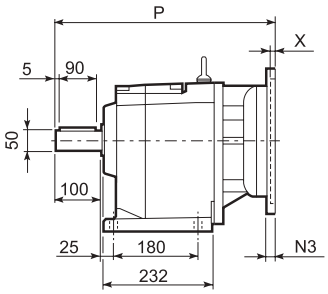

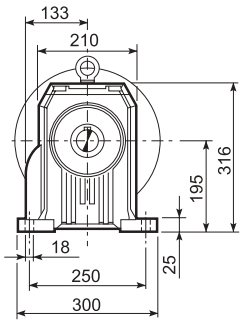

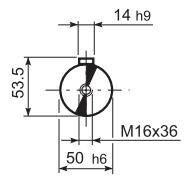

OUTPUT

U

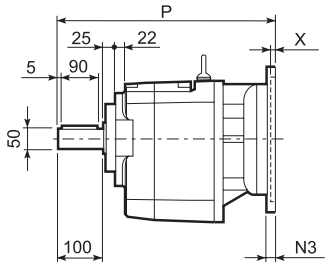

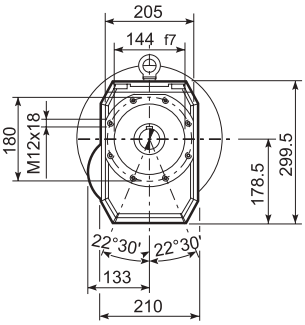

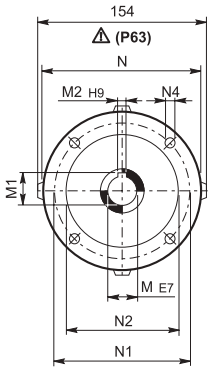

INPUT

UF

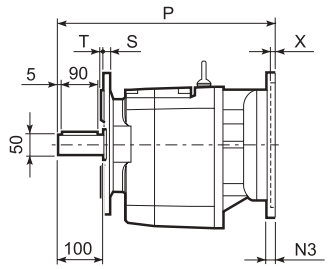

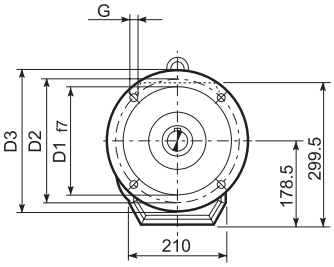

C 61_U						
	D1	D2	D3	G	T	S
FA	230	265	300	14	4	16
FB	250	300	350	18	5	18

		M	M1	M2	N	N1	N2	N3	N4	X	P	
C 61 2/3	P63	11	12.8	4	140	115	95	—	M8x19	4	415.5	55
C 61 2/3	P71	14	16.3	5	160	130	110	—	M8x16	4.5	415.5	57
C 61 2/3	P80	19	21.8	6	200	165	130	—	M10x14.5	4	435	61
C 61 2/3	P90	24	27.3	8	200	165	130	—	M10x14.5	4	435	61
C 61 2/3	P100	28	31.3	8	250	215	180	—	M12x16	4.5	444	65
C 61 2/3	P112	28	31.3	8	250	215	180	—	M12x16	4.5	444	65
C 61 2/3	P132	38	41.3	10	300	265	230	16	14	5	481.5	68
C 61 2/3	P160	42	45.3	12	350	300	250	23	18	5.5	532	73
C 61 2/3	P180	48	51.8	14	350	300	250	23	18	5.5	532	73
C 61 4	P63	11	12.8	4	140	115	95	—	M8x19	4	486	61
C 61 4	P71	14	16.3	5	160	130	110	—	M8x16	4.5	489	63
C 61 4	P80	19	21.8	6	200	165	130	—	M10x14.5	4	505.5	67
C 61 4	P90	24	27.3	8	200	165	130	—	M10x14.5	4	505.5	67
C 61 4	P100	28	31.3	8	250	215	180	—	M12x16	4.5	515.5	71
C 61 4	P112	28	31.3	8	250	215	180	—	M12x16	4.5	515.5	71

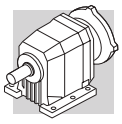

C 61...SK / SC

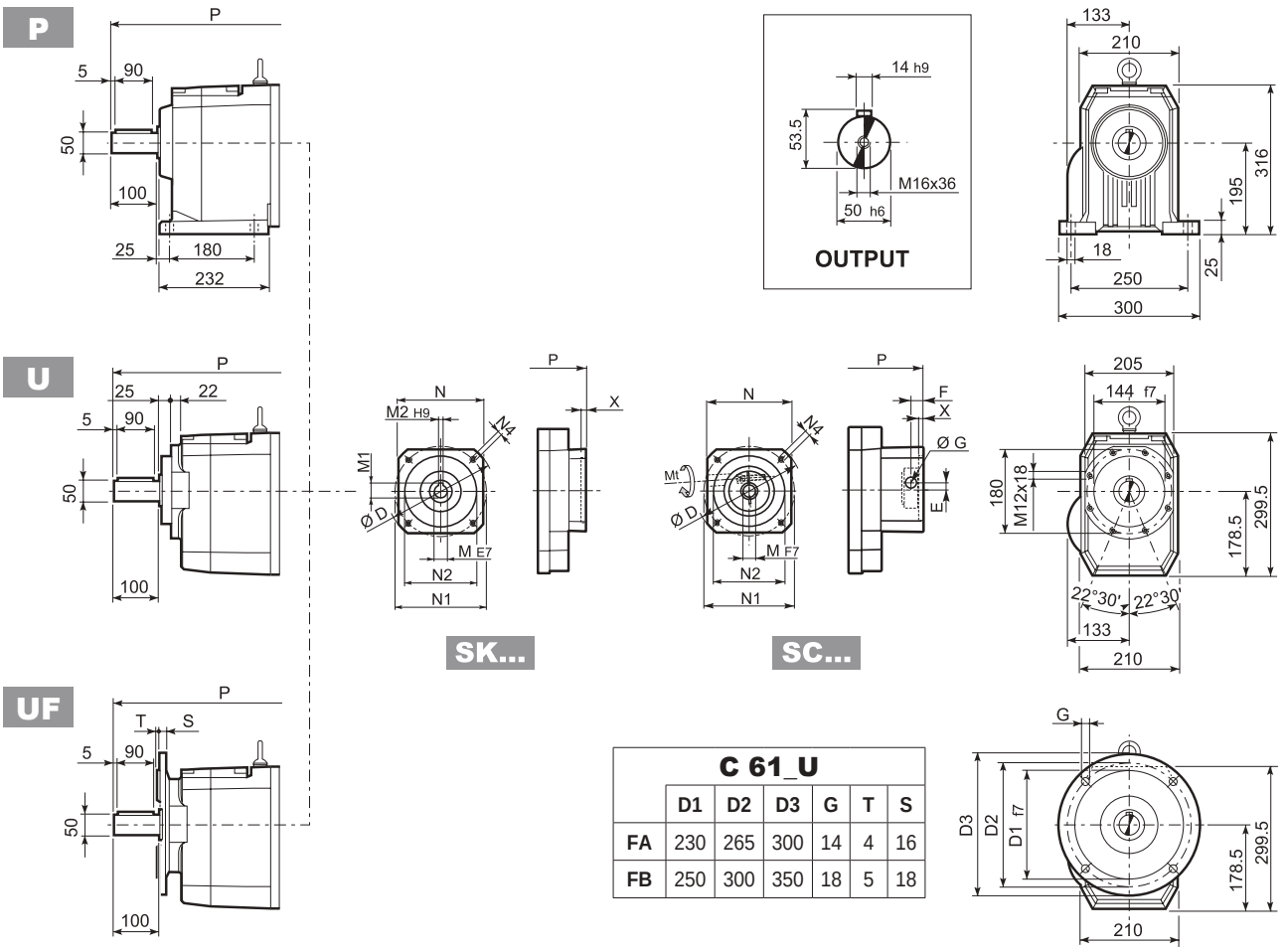

C 61_U						
	D1	D2	D3	G	T	S
FA	230	265	300	14	4	16
FB	250	300	350	18	5	18

		D	M	M1	M2	N	N1	N2	N4	X	P 2/3x	P 4x	
C 61 4	SK80B	120	14	16.3	5	96	100	80	M6x12	4	—	505.5	62
C 61 2/3/4	SK80C	120	19	21.8	6	96	100	80	M6x12	4	435	505.5	63/63/69
C 61 2/3/4	SK95A	130	14	16.3	5	102	115	95	M8x12	4	435	505.5	60/60/67
C 61 2/3/4	SK95B	130	19	21.8	6	102	115	95	M8x12	4	435	505.5	63/63/69
C 61 2/3/4	SK95C	130	24	27.3	8	102	115	95	M8x12	4	435	505.5	63/63/69
C 61 2/3/4	SK110A	140	19	21.8	6	120	130	110	M8x12	5	435	505.5	63/63/69
C 61 2/3/4	SK110B	140	24	27.3	8	120	130	110	M8x12	5	435	505.5	63/63/69
C 61 2/3/4	SK130A	188	24	27.3	8	142	165	130	M10x20	5	435	505.5	67/67/80
C 61 2/3	SK130B	189	32	35.3	10	160	165	130	M10x20	5	481.5	—	72/72
C 61 2/3	SK180A	240	32	35.3	10	192	215	180	M12x19	5	481.5	—	72/72
C 61 2/3	SK180B	240	38	41.3	10	192	215	180	M12x19	5	481.5	—	66/66

			Mt [Nm]	D	E	F	G	M	N	N1	N2	N4	X	P 2/3x	P 4x	
C 61 4	SC80B	M6	15	120	15.5	14.5	17.75	14	96	100	80	M6x12	4	—	529	63
C 61 2/3/4	SC80C	M6	15	120	15.5	14.5	17.75	19	96	100	80	M6x12	4	458.5	529	64/64/70
C 61 2/3/4	SC95A	M6	15	130	16.5	15	17.75	14	102	115	95	M8x16	4	458.5	529	61/61/68
C 61 2/3/4	SC95B	M6	15	130	16.5	15	17.75	19	102	115	95	M8x16	4	458.5	529	64/64/70
C 61 2/3/4	SC95C	M6	15	130	16.5	15	17.75	24	102	115	95	M8x16	4	458.5	529	64/64/70
C 61 2/3/4	SC110A	M6	15	140	16.5	16	17.75	19	120	130	110	M8x16	5	458.5	529	65/65/70
C 61 2/3/4	SC110B	M6	15	140	16.5	16	17.75	24	120	130	110	M8x16	5	458.5	529	65/65/70
C 61 2/3/4	SC130A	M6	15	188	19	16	17.75	24	142	165	130	M10x20	5	458.5	529	66/66/81
C 61 2/3	SC130B	M8	36	189	20	17	17.75	32	160	165	130	M10x20	5	504.5	—	75/75
C 61 2/3	SC180A	M8	36	240	20	17.5	17.75	32	192	215	180	M12x24	5	508.5	—	75/75
C 61 2/3	SC180B	M8	36	240	20	17.5	17.75	38	192	215	180	M12x24	5	508.5	—	69/69

Bonfiglioli Riduttori

C 61...HS

P

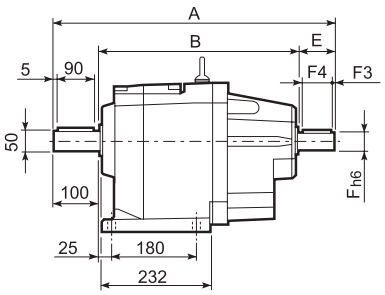

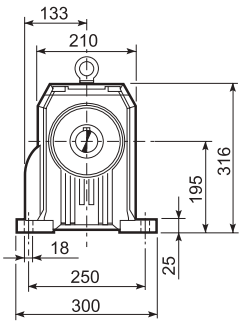

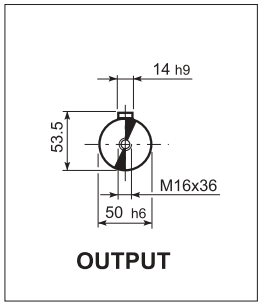

U

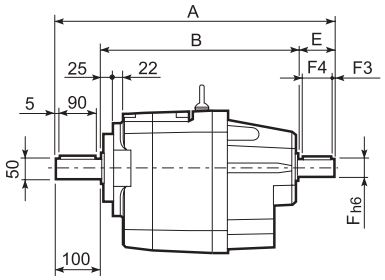

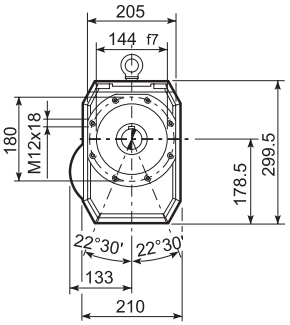

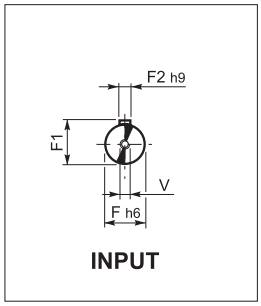

UF

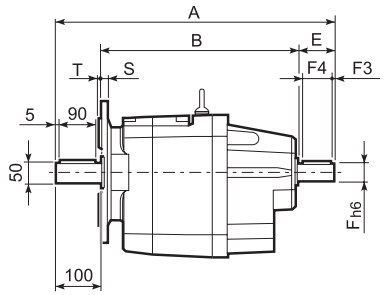

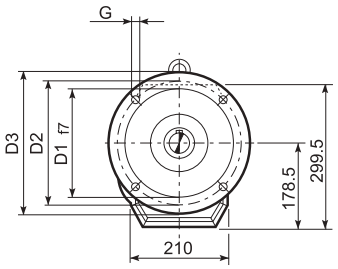

C 61_U						
	D1	D2	D3	G	T	S
FA	230	265	300	14	4	16
FB	250	300	350	18	5	18

		A	B	E	F	F1	F2	F3	F4	V	
C 61 2	HS	532	372	60	28	31	8	5	50	M10x22	66
C 61 3		532	372	60	28	31	8	5	50	M10x22	66
C 61 4		575	425	50	24	27	8	2.5	45	M8x19	72

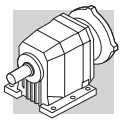

C 70...M

P

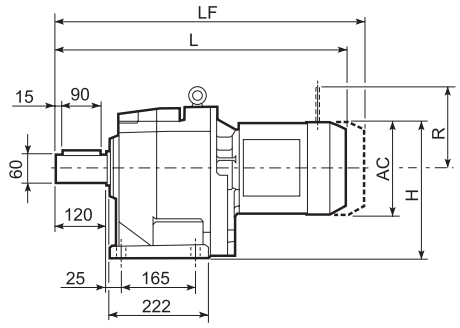

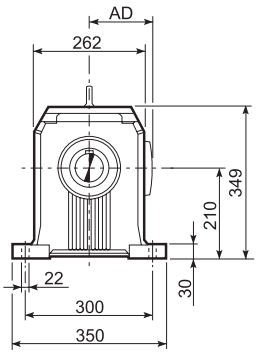

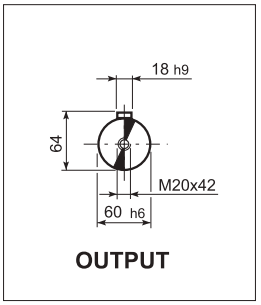

F

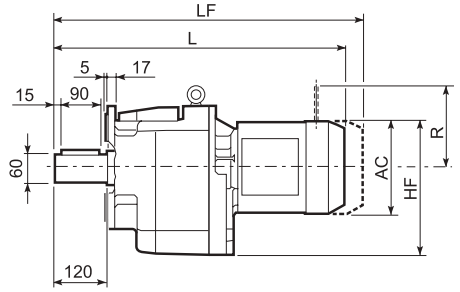

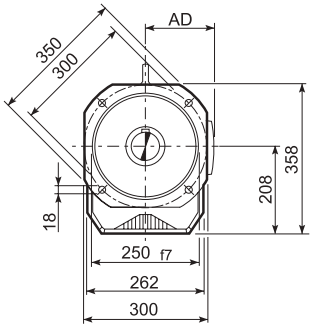

									M...FD M...FA		M...FD		M...FA	
			AC	H	HF	L	AD		LF		R	AD	R	AD
C 70 2/3	**S2**	**M2S**	156	288	286	636.5	119	88	707.5	92	129	146	134	119
C 70 2/3	**S3**	**M3S**	195	307.5	305.5	680.5	142	93	776.5	101	160	158	160	142
C 70 2/3	**S3**	**M3L**	195	307.5	305.5	712.5	142	101	803.5	108	160	158	160	142
C 70 2/3	**S4**	**M4**	258	339	337	820.5	193	135	929.5	153	226	210	217	193
C 70 2/3	**S4**	**M4LC**	258	339	337	855.5	193	143	954.5	161	226	210	217	193
C 70 2/3	**S5**	**M5S**	310	365	363	907	245	163	1047	193	266	245	247	245
C 70 2/3	**S5**	**M5L**	310	365	363	951	245	179	1091	209	266	245	247	245
C 70 4	**S1**	**M1**	138	279	277	659.5	108	88	720.5	91	103	135	124	108
C 70 4	**S2**	**M2S**	156	288	286	687.5	119	92	758.5	96	129	146	134	119
C 70 4	**S3**	**M3S**	195	307.5	305.5	731.5	142	97	827.5	104	160	158	160	142
C 70 4	**S3**	**M3L**	195	307.5	305.5	763.5	142	104	854.5	111	160	158	160	142
C 70 4	**S4**	**M4**	258	339	337	871.5	193	138	980.5	156	226	210	217	193
C 70 4	**S4**	**M4LC**	258	339	337	906.5	193	146	1005.5	164	226	210	217	193

Bonfiglioli Riduttori

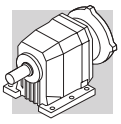

C 70...P(IEC)

P

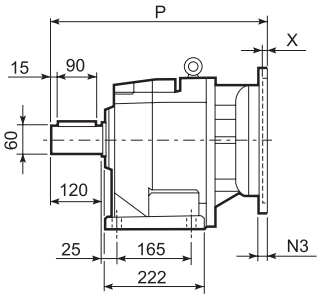

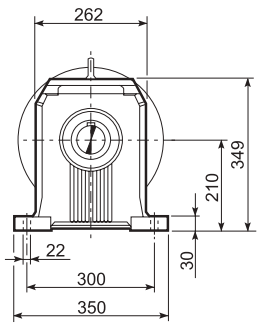

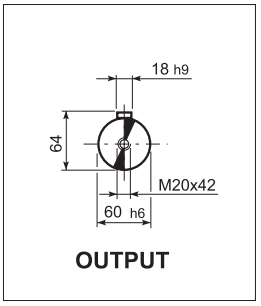

F

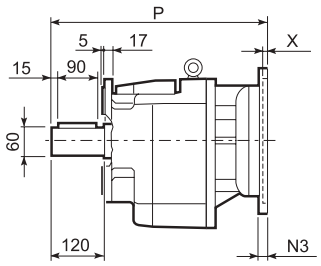

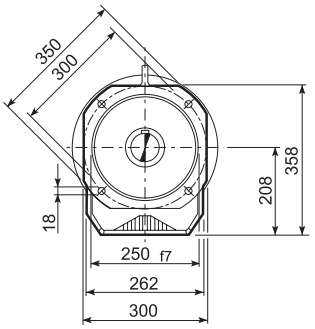

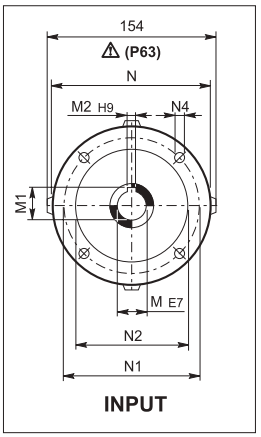

		M	M1	M2	N	N1	N2	N3	N4	X	P	
C 70 2/3	**P80**	19	21.8	6	200	165	130	—	M10x14.5	4	473	88
C 70 2/3	**P90**	24	27.3	8	200	165	130	—	M10x14.5	4	473	88
C 70 2/3	**P100**	28	31.3	8	250	215	180	—	M12x16	4.5	483	92
C 70 2/3	**P112**	28	31.3	8	250	215	180	—	M12x16	4.5	483	92
C 70 2/3	**P132**	38	41.3	10	300	265	230	16	14	5	519.5	95
C 70 2/3	**P160**	42	45.3	12	350	300	250	23	18	6	575	107
C 70 2/3	**P180**	48	51.8	14	350	300	250	23	18	6	575	107
C 70 2	**P200**	55	59.3	16	400	350	300	—	M16x25	7	600	129
C 70 4	**P63**	11	12.8	4	140	115	95	—	M8x19	4	504.5	91
C 70 4	**P71**	14	16.3	5	160	130	110	—	M8x16	4.5	504.5	91
C 70 4	**P80**	19	21.8	6	200	165	130	—	M10x14.5	4	524	92
C 70 4	**P90**	24	27.3	8	200	165	130	—	M10x14.5	4	524	92
C 70 4	**P100**	28	31.3	8	250	215	180	—	M12x16	4.5	534	96
C 70 4	**P112**	28	31.3	8	250	215	180	—	M12x16	4.5	534	96
C 70 4	**P132**	38	41.3	10	300	265	230	16	14	5	570.5	98

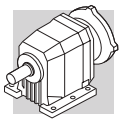

C 70...HS

P

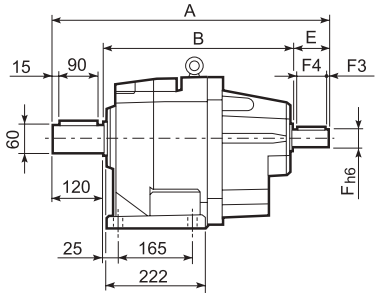

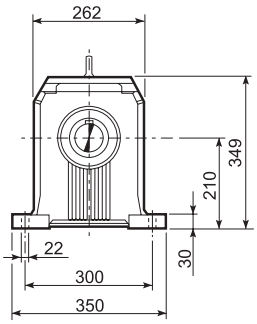

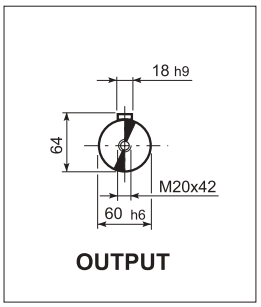

F

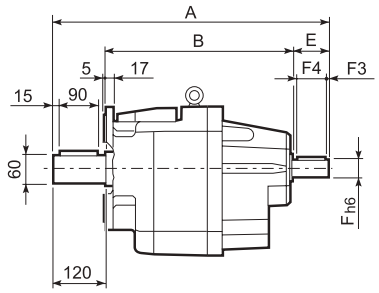

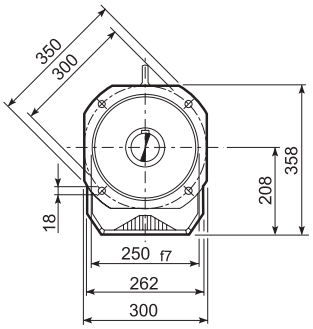

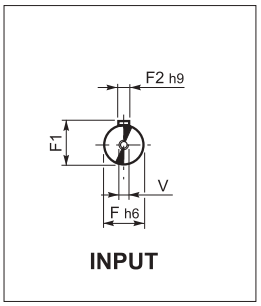

		A	B	E	F	F1	F2	F3	F4	V	
C 70 2	**HS**	657.5	427.5	110	42	45	12	10	90	M12x28	108
C 70 3		657.5	427.5	110	42	45	12	10	90	M12x28	108
C 70 4		593.5	423.5	50	24	27	8	2.5	45	M8x19	94

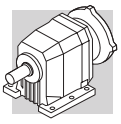

C 80...M

P

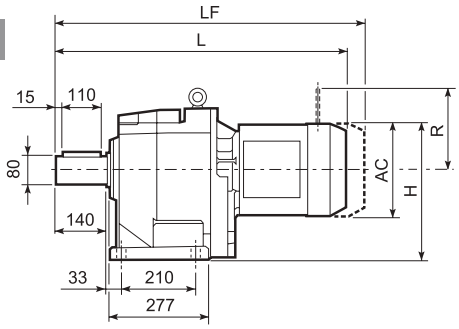

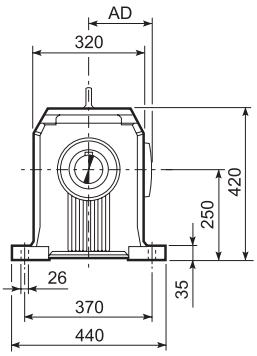

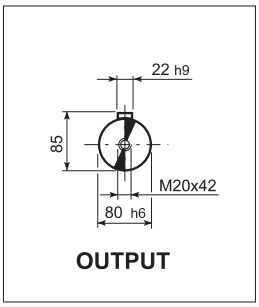

F

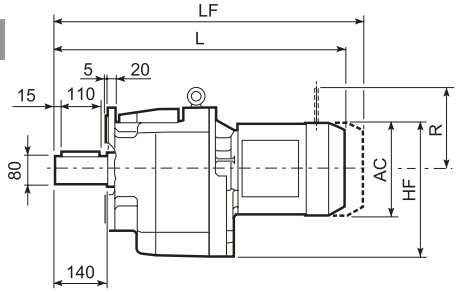

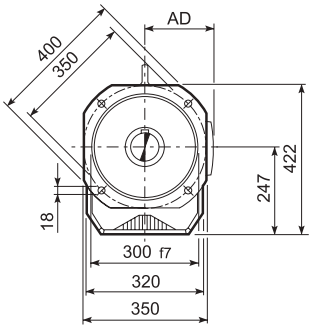

									M...FD M...FA		M...FD		M...FA	
			AC	H	HF	L	AD		LF		R	AD	R	AD
C 80 2/3	**S3**	**M3S**	195	347.5	344.5	742.5	142	139	838.5	146	160	158	160	142
C 80 2/3	**S3**	**M3L**	195	347.5	344.5	774.5	142	146	865.5	153	160	158	160	142
C 80 2/3	**S4**	**M4**	258	379	376	882.5	193	180	991.5	196	226	210	217	193
C 80 2/3	**S4**	**M4LC**	258	379	376	917.5	193	188	1016.5	204	226	210	217	193
C 80 2/3	**S5**	**M5S**	310	405	402	969	245	208	1109	238	266	245	247	245
C 80 2/3	**S5**	**M5L**	310	405	402	1013	245	224	1153	254	266	245	247	245
C 80 4	**S1**	**M1**	138	319	316	733.5	108	133	794.5	136	103	135	124	108
C 80 4	**S2**	**M2S**	156	328	325	761.5	119	137	832.5	141	129	146	134	119
C 80 4	**S3**	**M3S**	195	347.5	344.5	805.5	142	142	901.5	149	160	158	160	142
C 80 4	**S3**	**M3L**	195	347.5	344.5	837.5	142	149	928.5	156	160	158	160	142
C 80 4	**S4**	**M4**	258	379	376	945.5	193	183	1054.5	201	226	210	217	193
C 80 4	**S4**	**M4LC**	258	379	376	980.5	193	191	1079.5	209	226	210	217	193

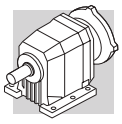

C 80...P(IEC)

P

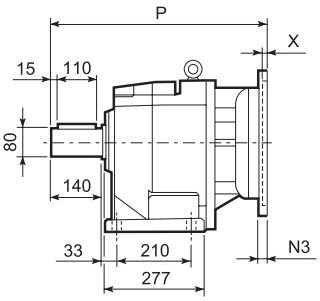

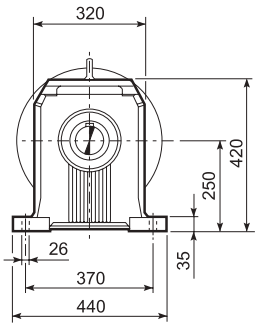

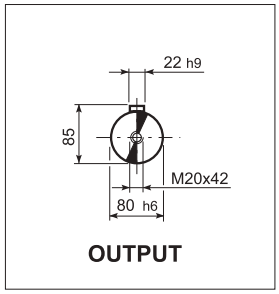

F

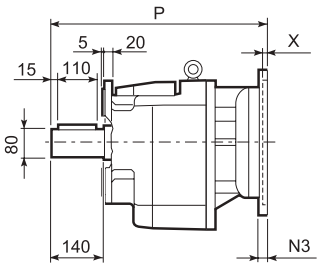

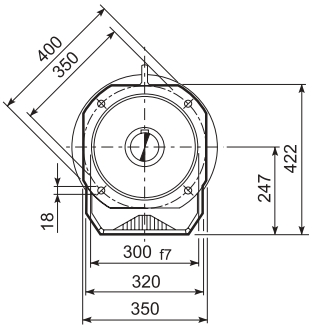

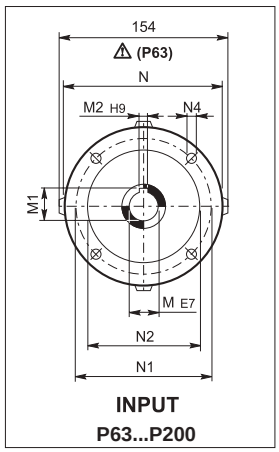

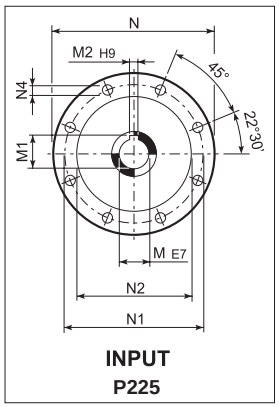

		M	M1	M2	N	N1	N2	N3	N4	X	P	
C 80 2/3	**P80**	19	21.8	6	200	165	130	—	M10x14.5	4	533	135
C 80 2/3	**P90**	24	27.3	8	200	165	130	—	M10x14.5	4	533	135
C 80 2/3	**P100**	28	31.3	8	250	215	180	—	M12x16	4.5	543	139
C 80 2/3	**P112**	28	31.3	8	250	215	180	—	M12x16	4.5	543	139
C 80 2/3	**P132**	38	41.3	10	300	265	230	16	14	5	579.5	141
C 80 2/3	**P160**	42	45.3	12	350	300	250	23	18	6	635	154
C 80 2/3	**P180**	48	51.8	14	350	300	250	23	18	6	635	154
C 80 2	**P200**	55	59.3	16	400	350	300	—	M16x25	7	660	176
C 80 2	**P225**	60	64.4	18	450	400	350	25	18	6	705.5	178
C 80 4	**P63**	11	12.8	4	140	115	95	—	M8x19	4	576.5	138
C 80 4	**P71**	14	16.3	5	160	130	110	—	M8x16	4.5	576.5	138
C 80 4	**P80**	19	21.8	6	200	165	130	—	M10x14.5	4	596	140
C 80 4	**P90**	24	27.3	8	200	165	130	—	M10x14.5	4	596	140
C 80 4	**P100**	28	31.3	8	250	215	180	—	M12x16	4.5	606	144
C 80 4	**P112**	28	31.3	8	250	215	180	—	M12x16	4.5	606	144
C 80 4	**P132**	38	41.3	10	300	265	230	16	M12x16	5	642.5	146

Bonfiglioli Riduttori

C 80...HS

P

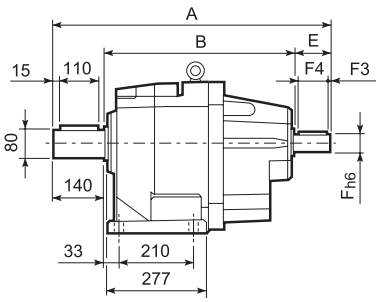

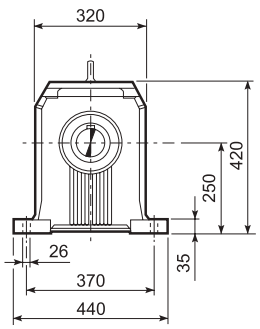

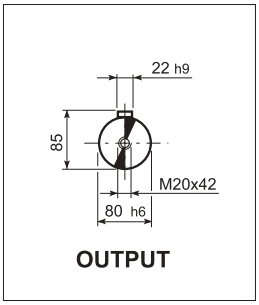

F

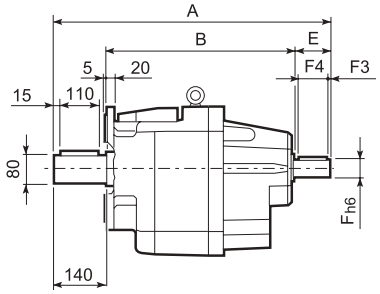

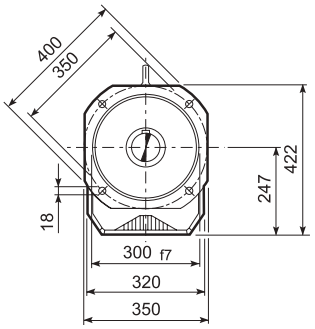

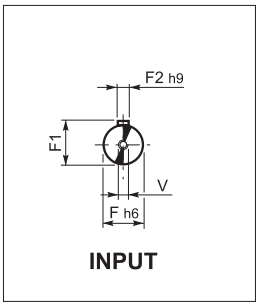

		A	B	E	F	F1	F2	F3	F4	V	
C 80 2		718.5	468.5	110	42	45	12	10	90	M12x28	154
C 80 3	**HS**	718.5	468.5	110	42	45	12	10	90	M12x28	154
C 80 4		666.5	476.5	50	24	27	8	2.5	45	M8x19	141

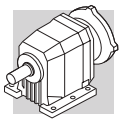

C 90...M

P

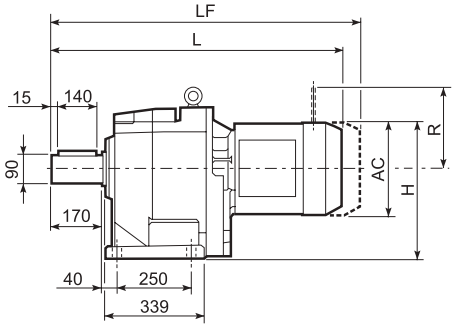

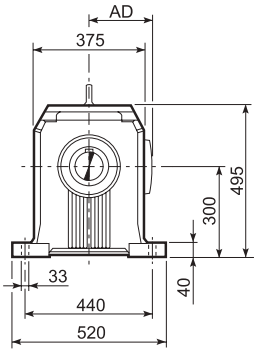

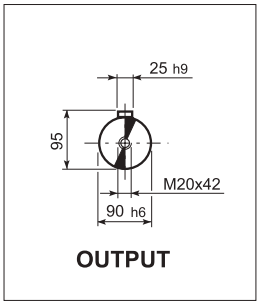

F

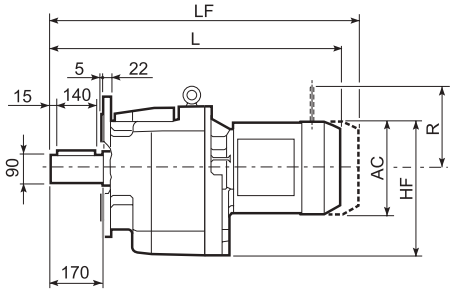

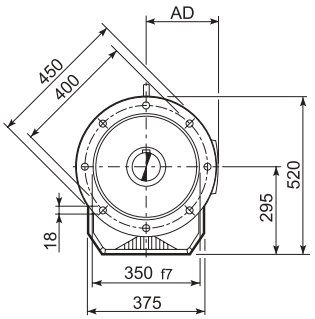

									M...FD M...FA		M...FD		M...FA	
			AC	H	HF	L	AD		LF		R	AD	R	AD
C 90 2/3	**S3**	**M3S**	195	397.5	392.5	852	142	228	948	236	160	158	160	142
C 90 2/3	**S3**	**M3L**	195	397.5	392.5	884	142	236	975	243	160	158	160	142
C 90 2/3	**S4**	**M4**	258	429	424	992	193	270	1101	288	226	210	217	193
C 90 2/3	**S4**	**M4LC**	258	429	424	1027	193	278	1126	296	226	210	217	193
C 90 2/3	**S5**	**M5S**	310	455	450	1078.5	245	298	1218.5	328	266	245	247	245
C 90 2/3	**S5**	**M5L**	310	455	450	1122.5	245	314	1262.5	344	266	245	247	245
C 90 4	**S1**	**M1**	138	369	364	862	108	226	923	228	103	135	124	108
C 90 4	**S2**	**M2S**	156	378	373	891	119	234	962	238	129	146	134	119
C 90 4	**S3**	**M3S**	195	397.5	392.5	935	142	239	1031	246	160	158	160	142
C 90 4	**S3**	**M3L**	195	397.5	392.5	967	142	246	1058	253	160	158	160	142
C 90 4	**S4**	**M4**	258	429	424	1075	193	280	1184	298	226	210	217	193
C 90 4	**S4**	**M4LC**	258	429	424	1126.5	193	288	1209	306	226	210	217	193

Bonfiglioli Riduttori

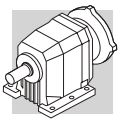

C 90...P(IEC)

P

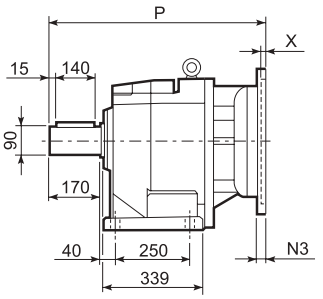

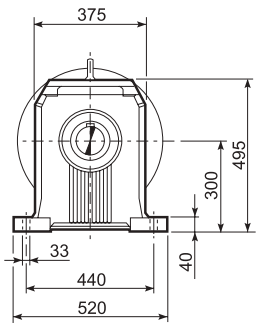

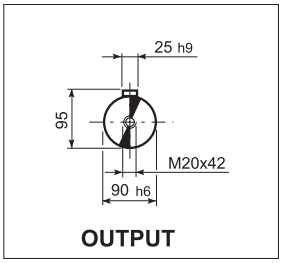

F

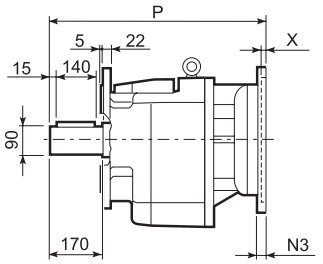

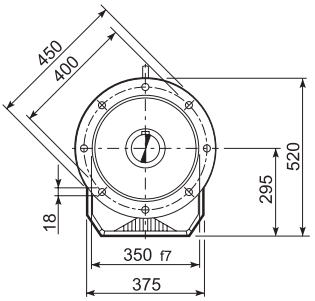

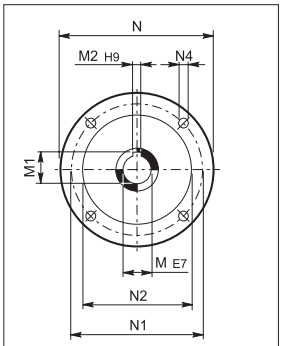

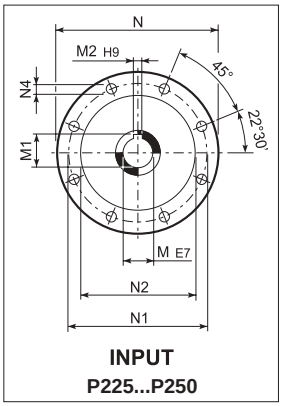

		M	M1	M2	N	N1	N2	N3	N4	X	P	
C 90 2/3	**P80**	19	21.8	6	200	165	130	—	M10x14.5	4	644.5	229
C 90 2/3	**P90**	24	27.3	8	200	165	130	—	M10x14.5	4	644.5	229
C 90 2/3	**P100**	28	31.3	8	250	215	180	—	M12x16	4.5	654.5	234
C 90 2/3	**P112**	28	31.3	8	250	215	180	—	M12x16	4.5	654.5	234
C 90 2/3	**P132**	38	41.3	10	300	265	230	16	14	5	691	236
C 90 2/3	**P160**	42	45.3	12	350	300	250	23	18	6	746.5	251
C 90 2/3	**P180**	48	51.8	14	350	300	250	23	18	6	746.5	251
C 90 2/3	**P200**	55	59.3	16	400	350	300	—	M16x25	7	771.5	272
C 90 2/3	**P225**	60	64.4	18	450	400	350	30	18	6	817	273
C 90 2/3	**P250**	65	69.4	18	550	500	450	30	18	6	847	295
C 90 4	**P63**	11	12.8	4	140	115	95	—	M8x19	4	707.5	236
C 90 4	**P71**	14	16.3	5	160	130	110	—	M8x16	4.5	707.5	236
C 90 4	**P80**	19	21.8	6	200	165	130	—	M10x14.5	4	727	238
C 90 4	**P90**	24	27.3	8	200	165	130	—	M10x14.5	4	727	238
C 90 4	**P100**	28	31.3	8	250	215	180	—	M12x16	4.5	737	242
C 90 4	**P112**	28	31.3	8	250	215	180	—	M12x16	4.5	737	242
C 90 4	**P132**	38	41.3	10	300	265	230	16	14	5	773.5	244
C 90 4	**P160**	42	45.3	12	350	300	250	23	18	5.5	824	248
C 90 4	**P180**	48	51.8	14	350	300	250	23	18	5.5	824	248

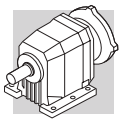

C 90...HS

P

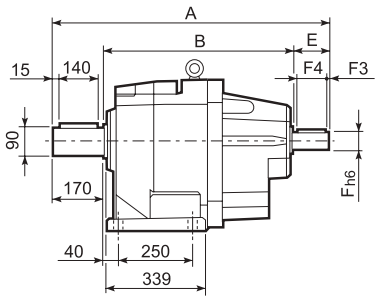

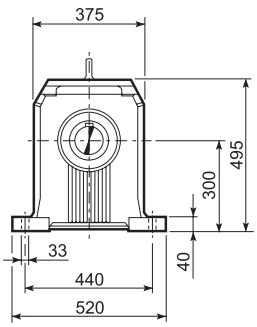

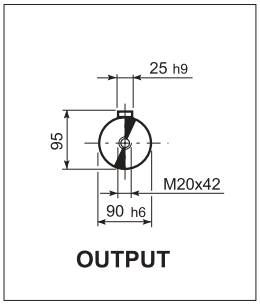

F

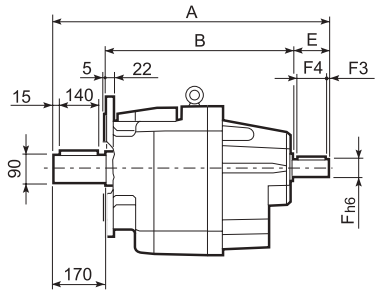

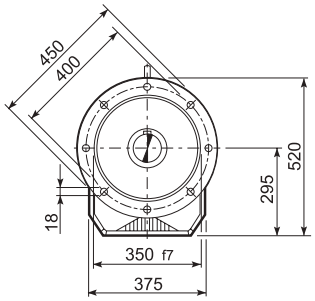

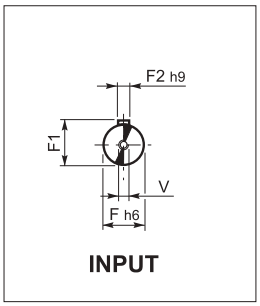

		A	B	E	F	F1	F2	F3	F4	V	
C 90 2		930.5	620.5	140	60	64	18	10	120	M16x36	273
C 90 3	**HS**	930.5	620.5	140	60	64	18	10	120	M16x36	273
C 90 4		797	577	50	24	27	8	2.5	45	M8x19	240

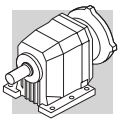

C 100...M

P

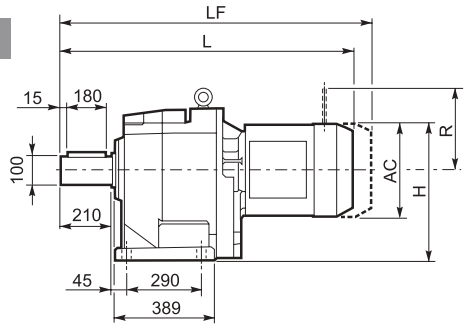

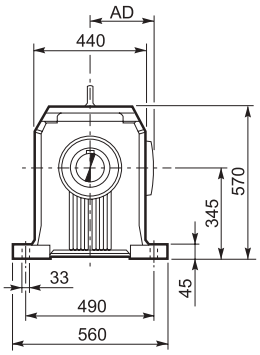

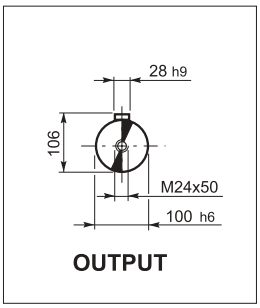

F

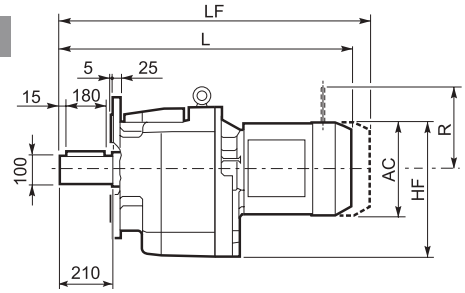

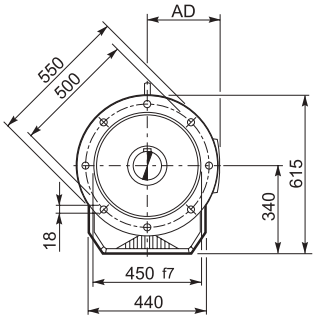

									M...FD M...FA		M...FD		M...FA	
			AC	H	HF	L	AD		LF		R	AD	R	AD
C 100 2/3	**S4**	**M4**	258	474	469	1087	193	392	1196	410	226	210	217	193
C 100 2/3	**S4**	**M4LC**	258	474	469	1122	193	400	1221	418	226	210	217	193
C 100 2/3	**S5**	**M5S**	310	500	495	1173.5	245	420	1313.5	450	266	245	247	245
C 100 2/3	**S5**	**M5L**	310	500	495	1217.5	245	436	1357.5	466	266	245	247	245
C 100 4	**S1**	**M1**	138	414	409	956.5	108	346	1027.5	348	103	135	124	108
C 100 4	**S2**	**M2S**	156	423	418	985.5	119	354	1056.5	357	129	146	134	119
C 100 4	**S3**	**M3S**	195	442.5	437.5	1029.5	142	358	1125.5	366	160	158	160	142
C 100 4	**S3**	**M3L**	195	442.5	437.5	1061.5	142	366	1152.5	373	160	158	160	142
C 100 4	**S4**	**M4**	258	474	469	1169.5	193	400	1278.5	418	226	210	217	193
C 100 4	**S4**	**M4LC**	258	474	469	1204.5	245	408	1303.5	426	226	210	217	193

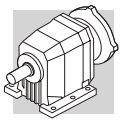

C 100...P(IEC)

P

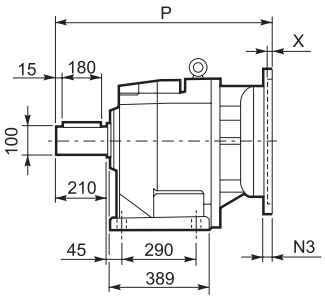

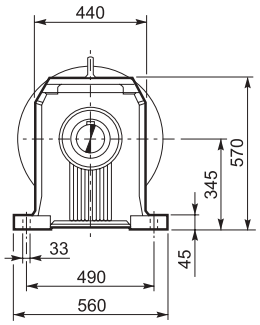

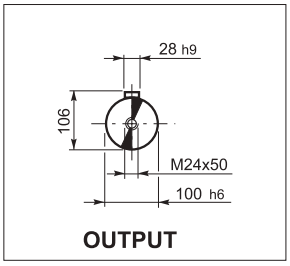

F

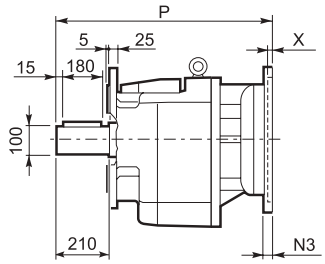

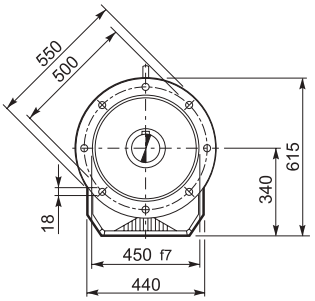

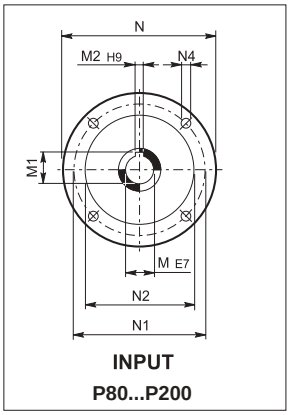

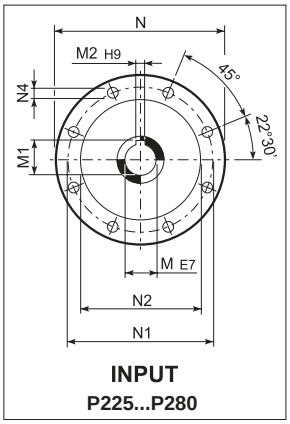

		M	M1	M2	N	N1	N2	N3	N4	X	P	
C 100 2/3	**P100**	28	31.3	8	250	215	180	—	M12x16	4.5	749.5	364
C 100 2/3	**P112**	28	31.3	8	250	215	180	—	M12x16	4.5	749.5	364
C 100 2/3	**P132**	38	41.3	10	300	265	230	16	14	5	786	367
C 100 2/3	**P160**	42	45.3	12	350	300	250	23	18	6	841.5	382
C 100 2/3	**P180**	48	51.8	14	350	300	250	23	18	6	841.5	382
C 100 2/3	**P200**	55	59.3	16	400	350	300	—	M16x25	7	866.5	403
C 100 2/3	**P225**	60	64.4	18	450	400	350	30	18	7	912	403
C 100 2/3	**P250**	65	69.4	18	550	500	450	30	18	7	942	426
C 100 2/3	**P280**	75	79.9	20	550	500	450	30	18	6	942	426
C 100 4	**P63**	11	12.8	4	140	115	95	—	M8x19	4	803	369
C 100 4	**P71**	14	16.3	5	160	130	110	—	M8x16	4.5	803	369
C 100 4	**P80**	19	21.8	6	200	165	130	—	M10x14.5	4	822.5	371
C 100 4	**P90**	24	27.3	8	200	165	130	—	M10x14.5	4	822.5	371
C 100 4	**P100**	28	31.3	8	250	215	180	—	M12x16	4.5	832.5	375
C 100 4	**P112**	28	31.3	8	250	215	180	—	M12x16	4.5	832.5	375
C 100 4	**P132**	38	41.3	10	300	265	230	16	14	5	869	377
C 100 4	**P160**	42	45.3	12	350	300	250	23	18	5.5	919.5	381
C 100 4	**P180**	48	51.8	14	350	300	250	23	18	5.5	919.5	381

Bonfiglioli Riduttori

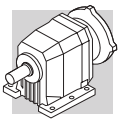

C 100...HS

P

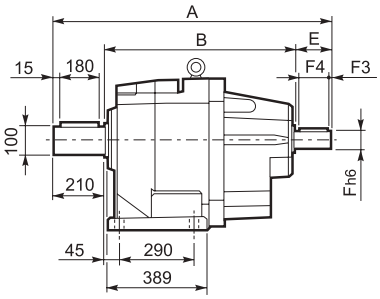

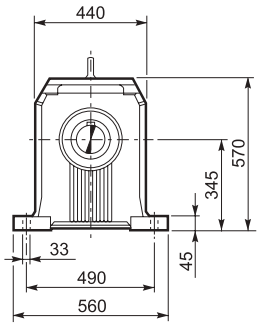

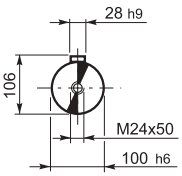

OUTPUT

F

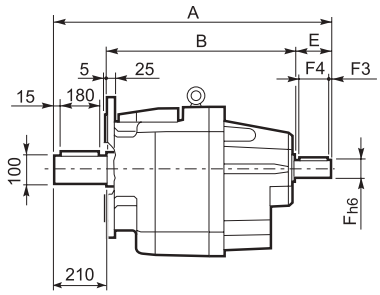

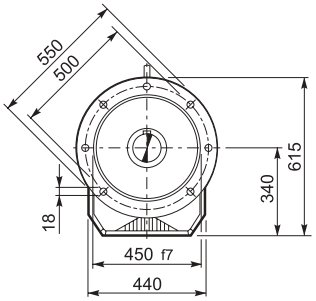

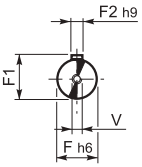

INPUT

		A	B	E	F	F1	F2	F3	F4	V	
C 100 2		1025.5	676	140	60	64	18	10	120	M16x36	409
C 100 3	**HS**	1025.5	676	140	60	64	18	10	120	M16x36	409
C 100 4		892	632	50	24	27	8	2.5	45	M8x19	372

31 DESIGN FEATURES

The main design characteristics are:
- modularity
- space effective
- universal mounting
- high efficiency
- quite operation
- gears in hardened and case-hardened steel
- bare aluminium housing for sizes 05, 10, 20, 30, unpainted
  high strength painted cast-iron housings for larger frame sizes
- input and output shafts from high grade steel.

(C 26)

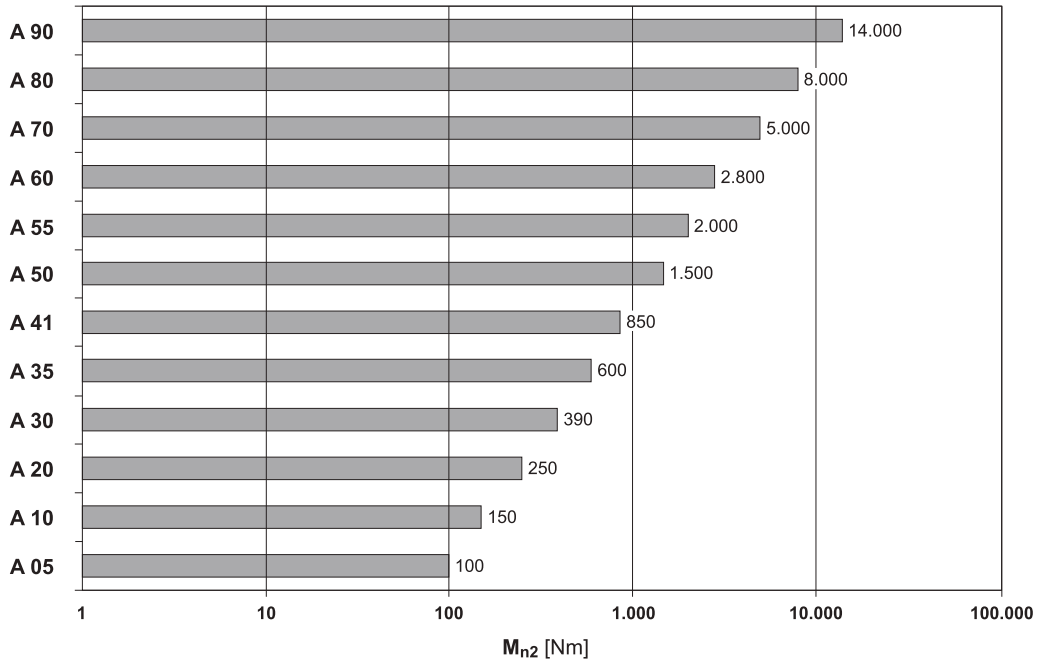

* For any limitations regarding construction type QF see the “VERSIONS” chapter.

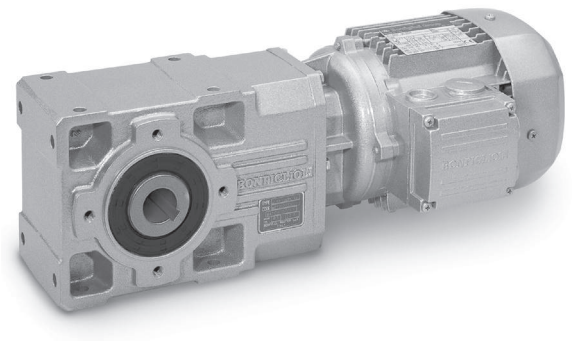

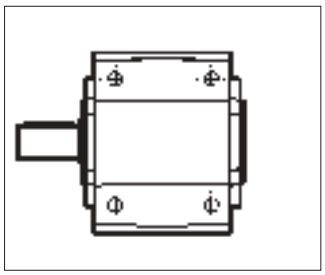

UR

Single extension output shaft

A 05 ... A 90

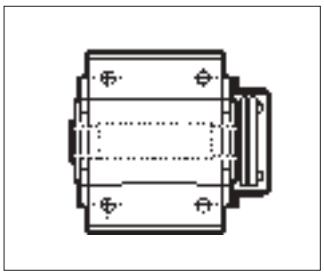

US

Hollow output shaft and shrink disc

A 05 ... A 90

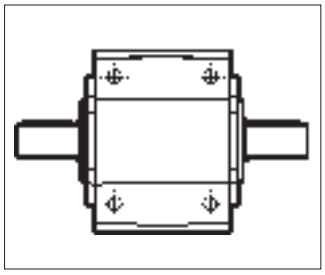

UD

Double extended output shaft

A 05 ... A 90

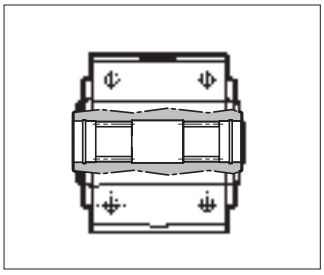

UV

Splined hollow shaft DIN 5480

A 20 ... A 60

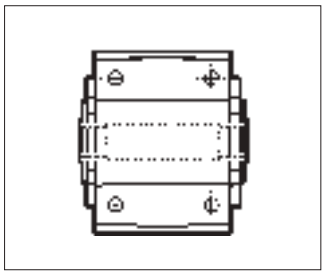

UH

Hollow output shaft and keyway

A 05 ... A 90

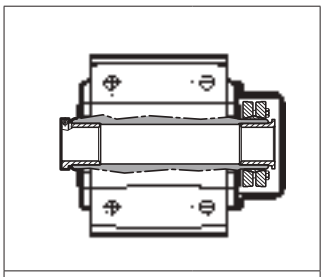

QF (Quick-fit)

Hollow shaft with adapter bushings and shrink disc

A 10 ... A 60

	$M_{n2\ max}$ [Nm]
A 35 QF35	550
A 55 QF55	1900

Basic versions with bolted flange

The sketches show the applicable flanges to the basic versions and their positions, designated with either ① or ②.

UR F1... UR F2...

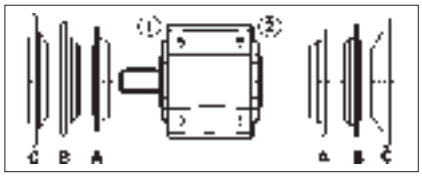

UD F1... UD F2...

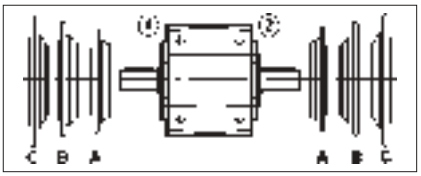

UH... F1... UH... F2...

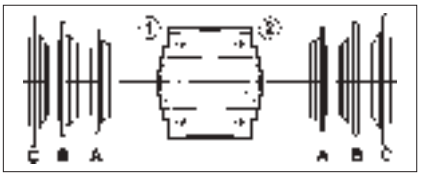

US F1... US F2...

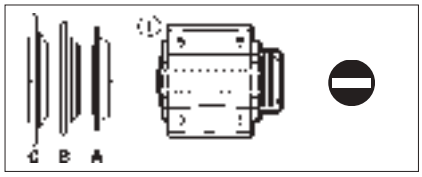

UV F1... UV F2...

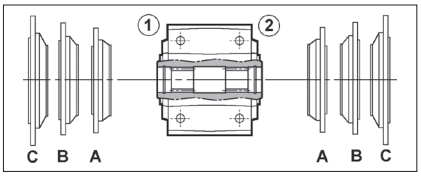

QF...

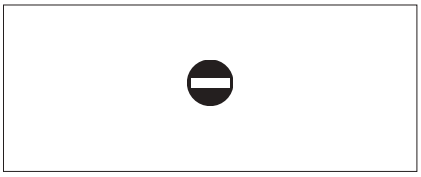

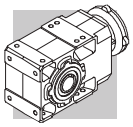

33 DESIGNATION

GEAR UNIT

A 35 2 UH40 F1A 33.2 S3 VA .....

OPTIONS

MOUNTING POSITION
B3 (Standard), **B6**, **B7**, **B8**, **VA**, **VB**

INPUT CONFIGURATION

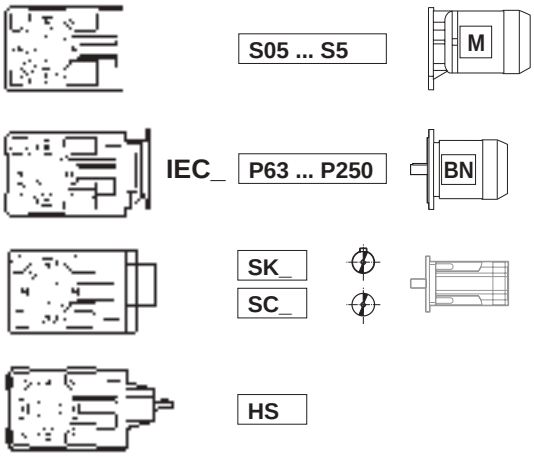

GEAR RATIO

OUTPUT FLANGE SIZE AND POSITION
(specify only if requested)

F = Flanged version
1, **2** = Flange position
A, **B**, **C** = Flange size

VERSION

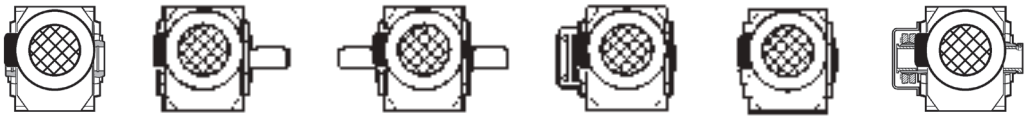

UH_	UR	UD	US	UV	QF
	(A 05...A 90)	(A 05...A 90)	(A 05...A 90)	(A 20...A 60)	(A 10...A 60)

A 05	A 10	A 20	A 30	A 35	A 41	A 50	A 55	A 60	A 70	A 80	A 90
UH25	**UH25**	**UH30**	**UH35**	**UH40**	**UH45**	**UH50**	**UH60**	**UH60**	**UH70**	**UH80**	**UH90**
—	UH30	UH35	UH40	UH35	UH40	UH55	UH50	UH70	UH80	UH90	UH100

REDUCTIONS
2 (A 05...A 60), **3** (A 20...A 90), **4** (A 50...A 90)

GEAR FRAME SIZE
05, **10**, **20**, **30**, **35**, **41**, **50**, **55**, **60**, **70**, **80**, **90**

TYPE: **A** = Helical bevel gear units

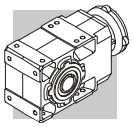

MOTOR | BRAKE

M 1LA 4 230/400-50 IP54 CLF ..... **W FD** 7.5 R SB 220 SA .....

OPTIONS

BRAKE SUPPLY

RECTIFIER TYPE
AC/DC
NB, **SB**, **NBR**, **SBR**

BRAKE HAND RELEASE
R, **RM**

BRAKE TORQUE

BRAKE TYPE
FD (d.c. brake)
FA (a.c. brake)

TERMINAL BOX POSITION
W (default), **N**, **E**, **S**

MOTOR MOUNTING
— (compact motor)
B5 (IEC - motor)

INSULATION CLASS
CL F standard
CL H option

DEGREE OF PROTECTION
IP55 standard (IP54 - brake motor)

VOLTAGE - FREQUENCY

POLE NUMBER
2, **4**, **6**, **2/4**, **2/6**, **2/8**, **2/12**, **4/6**, **4/8**

MOTOR SIZE
0B ... 5LA (compact motor)
63A ... 280M (IEC motor)

MOTOR TYPE
M = compact 3-phase
BN = IEC 3-phase

33.1 Gearbox options

AL, AR

On request the gear unit can be provided complete with a backstop device allowing the output shaft to rotate only in the direction specified at the time of ordering. The following table shows the gearboxes in which the anti-run back device can be installed. Anti-run back device exclude RB option.

(C 27)

A 30 2*	A 35 2* ⛔ (5.4_11.8)	A 41 2 ⛔ (5.2; 10.1)	A 50 3	A 55 3	A 60 3	A 70 3	A 80 3	A 90 3
			A 50 4	A 55 4	A 60 4	A 70 4	A 80 4	A 90 4

* The supply of the backstop will ban the configuration of servomotor adapters type S_60A, S_ 60B, S_80A.

When ordering the gear unit, the direction of free rotation must be specified through either the AR or the AL option (Table C27).

⚠ N.B. When the anti-run back device operates very frequently make sure that the torque backdriving the gearbox does not exceed 70% of the rated torque M_{n2} for the captioned gear unit.

(C 28)

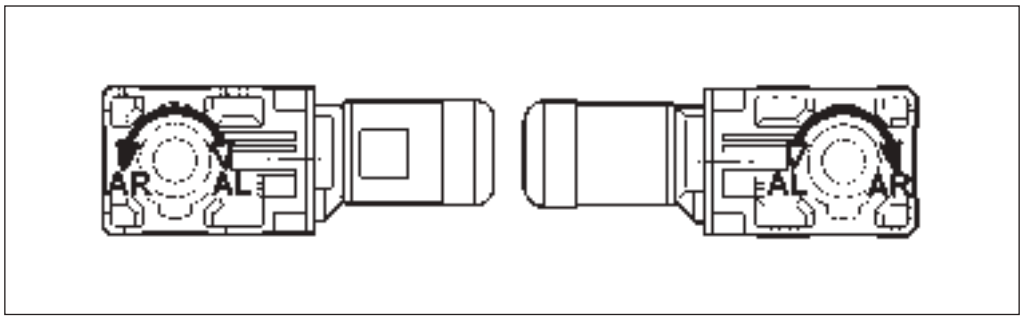

SO

Gear units A05, A10, A20, A30, A35 and A41, usually factory filled with oil, are, in this case, supplied unlubricated.

LO

Gearboxes A50, A55, A60, A70, A80 and A90, usually supplied without oil, to be supplied with synthetic oil currently used by BONFIGLIOLI RIDUTTORI and filled according to the mounting position specified.

DV

Dual oil seals on input shaft. (Only available for integral gearmotors).

VV

Fluoro elastomer oil seal on input shaft.

PV

All oil seals in Fluoro elastomer material.

TKL
Taconite seals are available, for output axis of gearboxes sizes (from) A70 to A90, to use in environments characterized by the presence of abrasive dust or powders. Taconite seals incorporate a combination of sealing rings, labyrinths and a grease chamber.
Greasing must be ensured as part of the scheduled maintenance programme.
This option includes fluoro elastomer oil seals on all axes.
For mounting position B6 please consult Bonfigliolis Technical service.

HDB
Certain gearboxes are available with increased overhung load ratings for use in applications characterised by high overhung loads beyond the capacity of the standard gearboxes. Specify the HDB option when ordering to obtain this increased overhung load capacity. The HDB option is available for gearbox sizes A10 to A50 with a single sided or through solid output shaft.
The following table specifies the maximum loads for HDB reinforced gearbox versions.
Figures refer to forces along the centreline of the output shaft.

(C 29)

HDB	R_{N2}					
	A 10	A 20	A 30	A 35	A 41	A 50
n_1 = 2800	**5500 N**	**6200 N**	**9600 N**	**12000 N**	**15000 N**	**20000 N**
⚠			8970 N @ i=5.4	10200 N @ i=5.4 10600 N @ i=6.4 11000 N @ i=7.0	11500 N @ i=5.2 12700 N @ i=7.1 13300 N @ i=8.3 13700 N @ i=9.2	19000 N @ i=7.7
n_1 = 1400	**5500 N**	**6200 N**	**9600 N**	**12000 N**	**15000 N**	**20000 N**
n_1 = 900	**5500 N**	**6200 N**	**9600 N**	**12000 N**	**15000 N**	**20000 N**
n_1 = 500	**5500 N**	**6200 N**	**9600 N**	**12000 N**	**15000 N**	**20000 N**

Reinforced bearings also allow these versions to withstand increased thrust loads, and in particular.

$$A_{N2} = 0.35 \times R_{n2} \quad (24)$$

In applications free from overhung load, thrust load capacity increases to:

$$A_{N2} = 0.70 \times R_{n2} \quad (25)$$

If load is applied simultaneously to both ends of a through output shaft, contact the Bonfiglioli Technical Service to verify the application.

RB
Gear units A10, A20, A30, A35, A41, A50, A55 and A60, usually supplied with standard values of angular backlash, are, in this case, supplied with reduced angular backlash values (excludes gear units options AL and AR described in this paragraph).
The following table specifies the corresponding figures of angular backlash.

(C 30)

		standard		RB	
A05	i =	5.5_12.3 - ⊖(10.6)	10.6_91.6 - ⊖(12.3)	—	
	φ [’]	**28**	**18**		
A10	i =	5.5_12.3 - ⊖(10.6)	10.6_91.6 - ⊖(12.3)	5.5_12.3 - ⊖(10.6)	10.6_91.6 - ⊖(12.3)
	φ [’]	**27**	**17**	**12**	**8**
A20	i =	5.4_12 - ⊖(10.3)	10.3_380.9 - ⊖(12)	5.4_12 - ⊖(10.3)	10.3_380.9 - ⊖(12)
	φ [’]	**23**	**15**	**11**	**7**
A30	i =	5.4_11.8 - ⊖(10.5)	10.5_400.8 - ⊖(11.8)	5.4_11.8 - ⊖(10.5)	10.5_400.8 - ⊖(11.8)
	φ [’]	**22**	**15**	**10**	**7**
A35	i =	5.4_11.8	13.1_393.2	5.4_11.8	13.1_393.2
	φ [’]	**20**	**11**	**9**	**6**
A41	i =	5.2_11.7 - ⊖(10.1)	10.1_376.8 - ⊖(11.7)	5.2-11.7 - ⊖(10.1)	10.1_376.8 - ⊖(11.7)
	φ [’]	**19**	**13**	**9**	**6**
A50	i =	7.7_778.2		7.7_778.2	
	φ [’]	**16**		**7**	
A55	i =	4.9_19.2	23.8_793	4.9_19.2	23.8_793
	φ [’]	**17**	**11**	**8**	**6**
A60	i =	7.9_20.6	25.7_755.4	7.9_20.6	25.7_755.4
	φ [’]	**12**	**9**	**5**	**4**
A70	i =	9.4_21.3	23.5_1715	—	
	φ [’]	**14**	**12**		
A80	i =	9.8_20.9	22.6_1558	—	
	φ [’]	**13**	**11**		
A90	i =	9.7_21	22.3_1632	—	
	φ [’]	**12**	**10**		

For the delivery timeframe contact the Bonfiglioli’s sales network

SURFACE PROTECTION

When no specific protection class is requested, the painted (ferrous) surfaces of gearboxes are protected to at least corrosivity class C2 (UNI EN ISO 12944-2). For improved resistance to atmospheric corrosion, gearboxes can be delivered with **C3** and **C4** surface protection, obtained by painting the complete gearbox.

(C 31)

SURFACE PROTECTION	Typical environments	Maximum surface temperature	Corrosivity class according to UNI EN ISO 12944-2
C3	Urban and industrial environments with up to 100% relative humidity (medium air pollution)	120°C	C3
C4	Industrial areas, coastal areas, chemical plant, with up to 100% relative humidity (high air pollution)	120°C	C4

Gearboxes with optional protection to class **C3** or **C4** are available in a choice of colours.
If no specific colour is requested (see the “PAINTING” option) gearboxes are finished in RAL 7042.
Gearboxes can also be supplied with surface protection for corrosivity class **C5** according to UNI EN ISO 12944-2. Contact our Technical Service for further details.

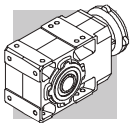

PAINTING

Gearboxes with optional protection to class C3 or C4 are available in the colours listed in the following table.

(C 32)

PAINTING	Colour	RAL number
RAL7042*	Traffic Grey A	7042
RAL5010	Gentian Blue	5010
RAL9005	Jet Black	9005
RAL9006	White Aluminium	9006
RAL9010	Pure White	9010

* Gearboxes are supplied in this standard colour if no other colour is specified.

NOTE – “PAINTING” options can only be specified in conjunction with “SURFACE PROTECTION” options.

CERTIFICATES

AC - Certificate of compliance
The document certifies the compliance of the product with the purchase order and the construction in conformity with the applicable procedures of the Bonfiglioli Quality System.

CC - Inspection certificate
The document entails checking on order compliance, the visual inspection of external conditions and of mating dimensions. Checking on main functional parameters in unloaded conditions is also performed along with oil seal proofing, both in static and in running conditions. Units inspected are sampled within the shipping batch and marked individually.

33.2 Accessories

See chapter 44 of this catalogue.

33.3 Motor options

AL, AR

The backstop option is also available for M motors and is not compatible with the presence of the same option of the gearbox. The following table shows the direction of free rotation of the gearbox, on the basis of which the correct option must be selected.

(C 34)

2x	A 05	A 10	A 20	A 30	A 35	A 41	A 50	A 60
3x	A 60	A 70	A 80	A 90				
4x	A 50	A 55						

2x	A 55					
3x	A 20	A 30	A 35	A 41	A 50	A 55
4x	A 60	A 70	A 80	A 90		

For further information on options, consult the electric motors section.

34 MOUNTING POSITION AND TERMINAL BOX ANGULAR LOCATION

Location of motor terminal box can be specified by viewing the motor from the fan side; standard location is shown in black (W).

Angular location of the brake release lever.

Unless otherwise specified, brake motors have the manual device side located, 90° apart from terminal box. Different angles can be specified through the relevant options available.

(C 33)

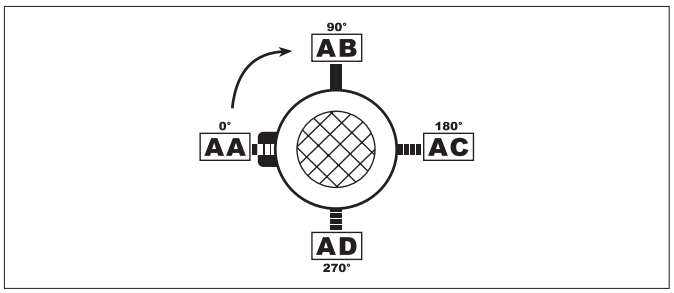

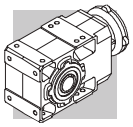

A ...

B3

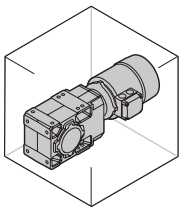

_S

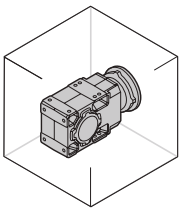

_P(IEC) _SK / _SC

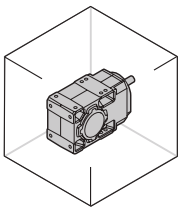

_HS

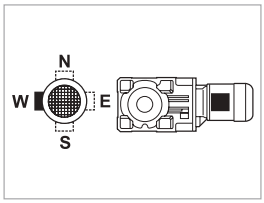

B6

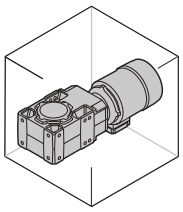

_S

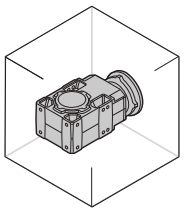

_P(IEC) _SK / _SC

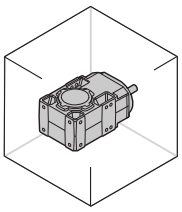

_HS

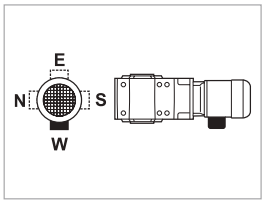

B7

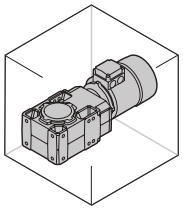

_S

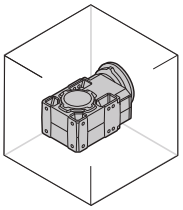

_P(IEC) _SK / _SC

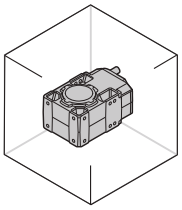

_HS

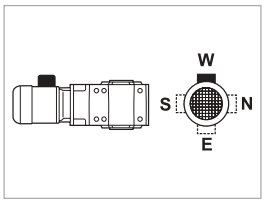

B8

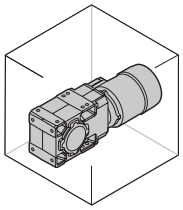

_S

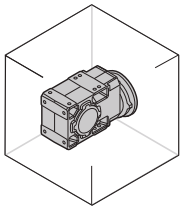

_P(IEC) _SK / _SC

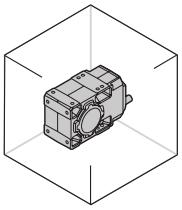

_HS

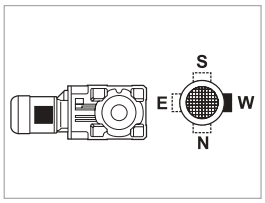

VA

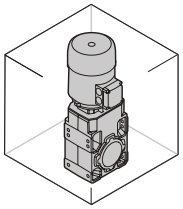

_S

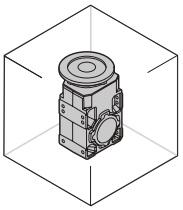

_P(IEC) _SK / _SC

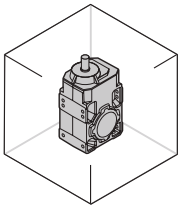

_HS

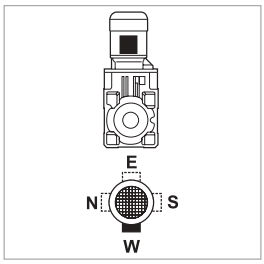

VB

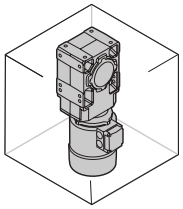

_S

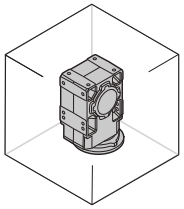

_P(IEC) _SK / _SC

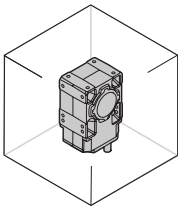

_HS

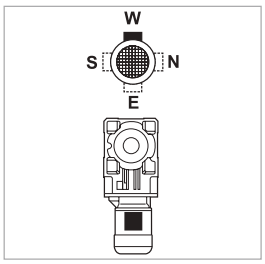

W = Default

35 OVERHUNG LOADS

External transmissions keyed onto input and/or output shaft generate loads that act radially onto same shaft.
Resulting shaft loading must be compatible with both the bearing and the shaft capacity. Namely shaft loading (R_{c1} for input shaft, R_{c2} for output shaft), must be equal or lower than admissible overhung load capacity for shaft under study (R_{n1} for input shaft, R_{n2} for output shaft). OHL capability listed in the rating chart section.
In the formulas given below, index (1) applies to parameters relating to input shaft, whereas index (2) refers to output shaft.
The load generated by an external transmission can be calculated with close approximation by the following equations:

$$R_{c1}[N] = \frac{2000 \cdot M_1[Nm] \cdot K_r}{d\,[mm]} \quad ; \quad R_{c2}[N] = \frac{2000 \cdot M_2[Nm] \cdot K_r}{d\,[mm]} \qquad (26)$$

(C 35)

M_1 [Nm]	Torque applied to input shaft
M_2 [Nm]	Torque drawn at output shaft
d [mm]	Pitch diameter of element keyed onto shaft
K_r = 1	Chain transmission

K_r = 1,25	Gear transmission
K_r = 1,5	V-belt transmission
K_r = 2,0	Flat belt transmission

Verification of OHL capability varies depending on whether load applies at midpoint of shaft or it is shifted further out:

(C 36)

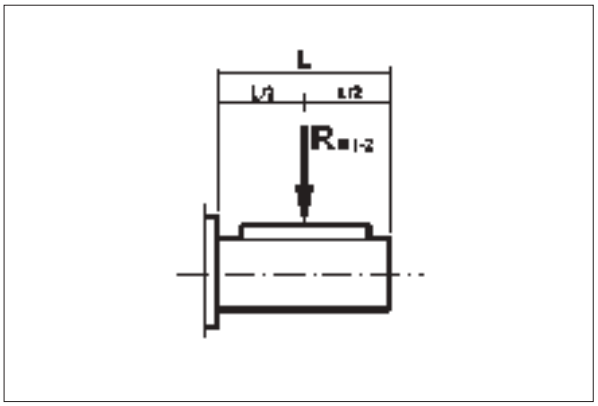

(C 37)

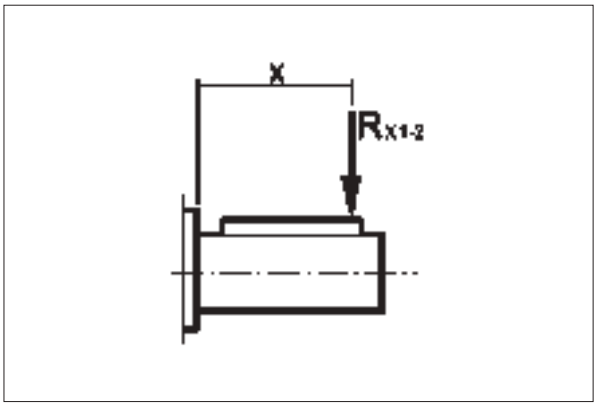

a) Load applied at midpoint of shaft, tab. (C36)

A comparison of shaft loading with catalogue OHL ratings should verify the following condition:

Rc1 ≤ Rn1 [input shaft]

or

Rc2 ≤ Rn2 [output shaft]

b) Load off the midpoint tab. (C37)

When load is shifted at an “x” distance from shaft shoulder, permissible load must be calculated for that distance.
Revised permissible overhung loads Rx1 (input) and Rx2 (output) are calculated respectively from original rated values Rn1 and Rn2 through factor:

$$\frac{a}{b+x} \qquad (27)$$

(C 38)

	Load location factors					
	Output shaft			Input shaft		
	a	**b**	**c**	**a**	**b**	**c**
A 05 2	116	86	450	—	—	—
A 10 2	123	101	600	21	1	300
A 20 2	150	120	750	40	20	350
A 20 3	150	120	750	21	1	300
A 30 2	168	138	900	38.5	18.5	350
A 30 3	168	138	900	21	1	300
A 35 2	182.5	147.5	950	38.5	18.5	350
A 35 3	182.5	147.5	950	21	1	300
A 41 2	198	158	1050	49.5	24.5	450
A 41 3	198	158	1050	40	20	350
A 50 2 - A 50 3	242.5	201.5	1300	49.5	24.5	450
A 50 4	242.5	201.5	1300	38.5	18.5	350
A 55 2 - A 55 3	231.5	179	1300	49.5	24.5	450
A 55 4	231.5	179	1300	38.5	18.5	350
A 60 2 - A 60 3	242.5	190	1550	55.5	25.5	600
A 60 4	242.5	190	1550	49.5	24.5	450
A 70 3	295.5	230.5	1900	86	31	1000
A 70 4	295.5	230.5	1900	49.5	24.5	450
A 80 3	345	280	2400	86	31	1000
A 80 4	345	280	2400	49.5	24.5	450
A 90 3	432	327	3000	116	46	1400
A 90 4	432	327	3000	49.5	24.5	450

Verification procedure is described here after.

INPUT SHAFT

1. Calculate:

$$R_{x1} = R_{n1} \cdot \frac{a}{b+x} \qquad (28)$$

N.B. Subject to condition:

$$\frac{L}{2} \leq x \leq c \qquad (29)$$

Finally, the following condition must be verified:

$$R_{c1} \leq R_{x1} \qquad (30)$$

OUTPUT SHAFT

1. Calculate:

$$R_{x2} = R_{n2} \cdot \frac{a}{b+x} \qquad (31)$$

N.B. Subject to condition:

$$\frac{L}{2} \leq x \leq c \qquad (32)$$

Finally, the following condition must be verified:

$$R_{c2} \leq R_{x2} \qquad (33)$$

36 THRUST LOADS, A_{n1}, A_{n2}

Permissible thrust loads on input [A_{n1}] and output [A_{n2}] shafts are obtained from the radial loading for the shaft under consideration [R_{n1}] and [R_{n2}] through the following equation:

$$A_{n1} = R_{n1} \cdot 0.2$$
$$A_{n2} = R_{n2} \cdot 0.2 \qquad (34)$$

The thrust loads calculated through these formulas apply to thrust forces occurring at the same time as rated radial loads.
In the only case that no overhung load acts on the shaft the value of the admissible thrust load [A_n] amounts to 50% of rated OHL [R_n] on same shaft.
Where thrust loads exceed permissible value or largely prevail over radial loads, contact Bonfiglioli Riduttori for an in-depth analysis of the application.

37 SHAFTS ARRANGEMENT

The following table shows standard directions of rotation for 2, 3 and 4 stage helical-bevel gearboxes.

(C 39)

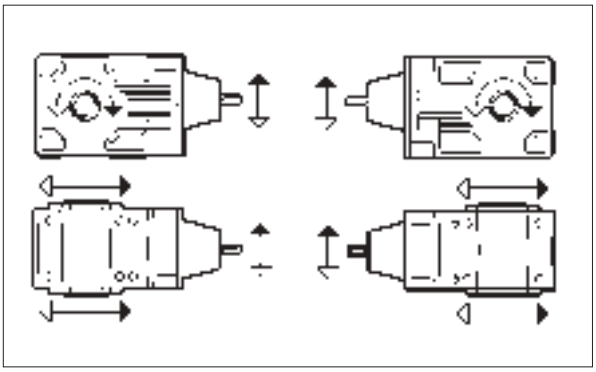

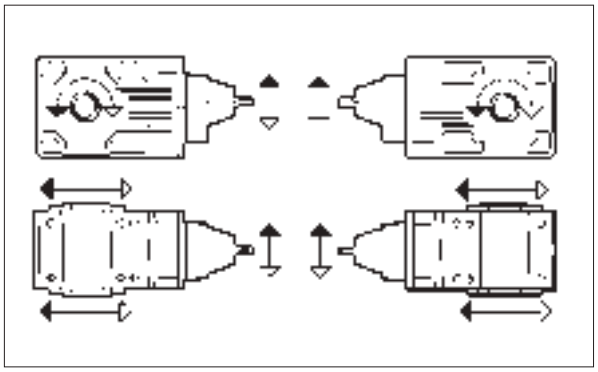

2x	A 05	A 10	A 20	A 30	A 35	A 41	A 50	A 60
3x	A 60	A 70	A 80	A 90				
4x	A 50	A 55						

2x	A 55					
3x	A 20	A 30	A 35	A 41	A 50	A 55
4x	A 60	A 70	A 80	A 90		

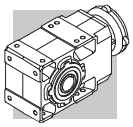

0.09 kW

n_2 min-1	M_2 Nm	S	i	R_{n2} N			IEC	
0.51	1492	3.4	1715	50000			**A704_1715 P63 BN63A6**	309
1.1	677	2.2	778.2	20000			**A504_778.2 P63 BN63A6**	297
1.2	616	2.4	707.9	20000			**A504_707.9 P63 BN63A6**	297
1.4	549	2.7	631.2	20000			**A504_631.2 P63 BN63A6**	297
1.5	499	3.0	574.2	20000			**A504_574.2 P63 BN63A6**	297
1.7	461	3.3	529.5	20000			**A504_529.5 P63 BN63A6**	297
2.2	356	1.0	400.8	9600	**A303_400.8 S05 M05A6**	284	**A303_400.8 P63 BN63A6**	285
2.6	302	1.7	339.3	12000	**A353_339.3 S05 M05A6**	288	**A353_339.3 P63 BN63A6**	289
3.0	259	3.3	291.7	15000	**A413_291.7 S05 M05A6**	292	**A413_291.7 P63 BN63A6**	293
3.5	221	2.7	248.1	12000	**A353_248.1 S05 M05A6**	288	**A353_248.1 P63 BN63A6**	289
4.1	193	2.1	216.6	9600	**A303_216.6 S05 M05A6**	284	**A303_216.6 P63 BN63A6**	285
4.9	159	1.6	178.3	6200	**A203_178.3 S05 M05A6**	280	**A203_178.3 P63 BN63A6**	281
5.8	134	2.8	150.7	9600	**A303_150.7 S05 M05A6**	284	**A303_150.7 P63 BN63A6**	285
6.8	115	2.2	129.1	6200	**A203_129.1 S05 M05A6**	280	**A203_129.1 P63 BN63A6**	281
8.1	97	2.5	109.2	6200	**A203_109.2 S05 M05A6**	280	**A203_109.2 P63 BN63A6**	281
9.6	84	1.5	91.6	5500	**A102_91.6 S05 M05A6**	276	**A102_91.6 P63 BN63A6**	277
11.5	70	2.1	76.4	5500	**A102_76.4 S05 M05A6**	276	**A102_76.4 P63 BN63A6**	277
13.3	61	2.5	65.9	5500	**A102_65.9 S05 M05A6**	276	**A102_65.9 P63 BN63A6**	277
15.0	54	2.8	58.6	5500	**A102_58.6 S05 M05A6**	276	**A102_58.6 P63 BN63A6**	277
17.2	47	3.2	51.3	5500	**A102_51.3 S05 M05A6**	276	**A102_51.3 P63 BN63A6**	277
19.4	42	2.4	45.4	4250	**A052_45.4 S05 M05A6**	273	**A052_45.4 P63 BN63A6**	273
21.5	38	2.7	40.9	4120	**A052_40.9 S05 M05A6**	273	**A052_40.9 P63 BN63A6**	273
25.1	32	3.1	35.1	3950	**A052_35.1 S05 M05A6**	273	**A052_35.1 P63 BN63A6**	273
27.3	30	3.4	32.2	3850	**A052_32.2 S05 M05A6**	273	**A052_32.2 P63 BN63A6**	273
31	26	3.8	28.6	3720	**A052_28.6 S05 M05A6**	273	**A052_28.6 P63 BN63A6**	273
35	23	4.4	25.5	3590	**A052_25.5 S05 M05A6**	273	**A052_25.5 P63 BN63A6**	273
37	22	4.6	23.8	3520	**A052_23.8 S05 M05A6**	273	**A052_23.8 P63 BN63A6**	273
41	19.6	5.3	21.4	3410	**A052_21.4 S05 M05A6**	273	**A052_21.4 P63 BN63A6**	273
47	17.1	5.9	18.6	3270	**A052_18.6 S05 M05A6**	273	**A052_18.6 P63 BN63A6**	273
53	15.1	6.8	16.4	3150	**A052_16.4 S05 M05A6**	273	**A052_16.4 P63 BN63A6**	273
63	12.8	7.8	13.9	2990	**A052_13.9 S05 M05A6**	273	**A052_13.9 P63 BN63A6**	273
72	11.3	8.8	12.3	2880	**A052_12.3 S05 M05A6**	273	**A052_12.3 P63 BN63A6**	273
83	9.7	10.3	10.6	2740	**A052_10.6 S05 M05A6**	273	**A052_10.6 P63 BN63A6**	273
92	8.8	11.3	9.6	2670	**A052_9.6 S05 M05A6**	273	**A052_9.6 P63 BN63A6**	273
103	7.8	13.2	8.5	2570	**A052_8.5 S05 M05A6**	273	**A052_8.5 P63 BN63A6**	273
122	6.6	15.1	7.2	2440	**A052_7.2 S05 M05A6**	273	**A052_7.2 P63 BN63A6**	273
139	5.8	17.8	6.3	2340	**A052_6.3 S05 M05A6**	273	**A052_6.3 P63 BN63A6**	273
161	5.0	19.9	5.5	2230	**A052_5.5 S05 M05A6**	273	**A052_5.5 P63 BN63A6**	273

0.12 kW

n_2 min-1	M_2 Nm	S	i	R_{n2} N			IEC	
0.51	2012	2.5	1715	50000			**A704_1715 P63 BN63B6**	309
0.55	1857	2.7	1583	50000			**A704_1583 P63 BN63B6**	309
0.65	1579	3.2	1346	50000			**A704_1346 P63 BN63B6**	309
0.70	1457	3.4	1242	50000			**A704_1242 P63 BN63B6**	309

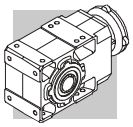

0.12 kW

n_2 min-1	M_2 Nm	S	i	R_{n2} N			IEC	
1.1	913	1.6	778.2	20000			**A504_778.2 P63 BN63B6**	297
1.2	818	3.4	697.3	30000			**A604_697.3 P63 BN63B6**	305
1.4	740	2.0	631.2	20000			**A504_631.2 P63 BN63B6**	297
1.6	621	2.4	529.5	20000			**A504_529.5 P63 BN63B6**	297
1.7	588	2.5	778.2	20000			**A504_778.2 P63 BN63A4**	297
1.9	535	2.8	707.9	20000			**A504_707.9 P63 BN63A4**	297
2.1	477	3.1	631.2	20000			**A504_631.2 P63 BN63A4**	297
2.4	434	3.5	574.2	20000			**A504_574.2 P63 BN63A4**	297
3.4	310	1.2	400.8	9600	**A303_400.8 S05 M05A4**	284	**A303_400.8 P63 BN63A4**	285
3.4	304	1.5	393.2	12000	**A353_393.2 S05 M05A4**	288	**A353_393.2 P63 BN63A4**	289
3.6	291	2.9	376.8	15000	**A413_376.8 S05 M05A4**	292	**A413_376.8 P63 BN63A4**	293
3.8	275	1.3	356.3	9600	**A303_356.3 S05 M05A4**	284	**A303_356.3 P63 BN63A4**	285
4.0	262	2.0	339.3	12000	**A353_339.3 S05 M05A4**	288	**A353_339.3 P63 BN63A4**	289
4.1	255	1.0	329.4	6200	**A203_329.4 S05 M05A4**	280	**A203_329.4 P63 BN63A4**	281
4.2	251	3.4	324.2	15000	**A413_324.2 S05 M05A4**	292	**A413_324.2 P63 BN63A4**	293
4.3	243	1.6	314.5	9600	**A303_314.5 S05 M05A4**	284	**A303_314.5 P63 BN63A4**	285
4.4	236	2.5	305.4	12000	**A353_305.4 S05 M05A4**	288	**A353_305.4 P63 BN63A4**	289
4.6	226	1.1	292.8	6200	**A203_292.8 S05 M05A4**	280	**A203_292.8 P63 BN63A4**	281
5.0	210	1.8	271.5	9600	**A303_271.5 S05 M05A4**	284	**A303_271.5 P63 BN63A4**	285
5.0	209	2.9	270.7	12000	**A353_270.7 S05 M05A4**	288	**A353_270.7 P63 BN63A4**	289
5.2	201	1.2	260.5	6200	**A203_260.5 S05 M05A4**	280	**A203_260.5 P63 BN63A4**	281
5.4	192	3.1	248.1	12000	**A353_248.1 S05 M05A4**	288	**A353_248.1 P63 BN63A4**	289
5.5	189	2.0	244.3	9600	**A303_244.3 S05 M05A4**	284	**A303_244.3 P63 BN63A4**	285
6.0	172	3.5	223.2	12000	**A353_223.2 S05 M05A4**	288	**A353_223.2 P63 BN63A4**	289
6.1	171	1.5	221.3	6200	**A203_221.3 S05 M05A4**	280	**A203_221.3 P63 BN63A4**	281
6.2	167	2.2	216.6	9600	**A303_216.6 S05 M05A4**	284	**A303_216.6 P63 BN63A4**	285
6.8	154	1.6	199.2	6200	**A203_199.2 S05 M05A4**	280	**A203_199.2 P63 BN63A4**	281
6.8	153	2.3	198.5	9600	**A303_198.5 S05 M05A4**	284	**A303_198.5 P63 BN63A4**	285
7.6	138	2.5	178.5	9600	**A303_178.5 S05 M05A4**	284	**A303_178.5 P63 BN63A4**	285
7.6	138	1.8	178.3	6200	**A203_178.3 S05 M05A4**	280	**A203_178.3 P63 BN63A4**	281
8.3	126	1.9	163.4	6200	**A203_163.4 S05 M05A4**	280	**A203_163.4 P63 BN63A4**	281
8.4	125	2.7	161.4	9600	**A303_161.4 S05 M05A4**	284	**A303_161.4 P63 BN63A4**	285
9.0	116	2.8	150.7	9600	**A303_150.7 S05 M05A4**	284	**A303_150.7 P63 BN63A4**	285
9.2	113	2.0	146.1	6200	**A203_146.1 S05 M05A4**	280	**A203_146.1 P63 BN63A4**	281
9.8	106	3.0	137.4	9600	**A303_137.4 S05 M05A4**	284	**A303_137.4 P63 BN63A4**	285
10.5	100	2.2	129.1	6200	**A203_129.1 S05 M05A4**	280	**A203_129.1 P63 BN63A4**	281
11.2	93	2.3	120.5	6200	**A203_120.5 S05 M05A4**	280	**A203_120.5 P63 BN63A4**	281
11.2	93	3.2	120.5	9600	**A303_120.5 S05 M05A4**	284	**A303_120.5 P63 BN63A4**	285
12.4	84	2.4	109.2	6200	**A203_109.2 S05 M05A4**	280	**A203_109.2 P63 BN63A4**	281
14.6	74	2.7	92.3	6200	**A202_92.3 S05 M05A4**	280	**A202_92.3 P63 BN63A4**	281
14.7	73	1.4	91.6	4420	**A052_91.6 S05 M05A4**	273	**A052_91.6 P63 BN63A4**	273
14.7	73	1.8	91.6	5500	**A102_91.6 S05 M05A4**	276	**A102_91.6 P63 BN63A4**	277
16.9	64	3.3	79.9	6200	**A202_79.9 S05 M05A4**	280	**A202_79.9 P63 BN63A4**	281
17.7	61	1.6	76.4	4230	**A052_76.4 S05 M05A4**	273	**A052_76.4 P63 BN63A4**	273
17.7	61	2.5	76.4	5500	**A102_76.4 S05 M05A4**	276	**A102_76.4 P63 BN63A4**	277
20.5	53	1.9	65.9	4070	**A052_65.9 S05 M05A4**	273	**A052_65.9 P63 BN63A4**	273
20.5	53	2.8	65.9	5500	**A102_65.9 S05 M05A4**	276	**A102_65.9 P63 BN63A4**	277
23.0	47	2.1	58.6	3950	**A052_58.6 S05 M05A4**	273	**A052_58.6 P63 BN63A4**	273
23.0	47	3.2	58.6	5500	**A102_58.6 S05 M05A4**	276	**A102_58.6 P63 BN63A4**	277
26.3	41	2.4	51.3	3810	**A052_51.3 S05 M05A4**	273	**A052_51.3 P63 BN63A4**	273
29.7	36	2.8	45.4	3680	**A052_45.4 S05 M05A4**	273	**A052_45.4 P63 BN63A4**	273

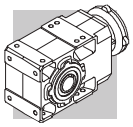

0.12 kW

n_2 min-1	M_2 Nm	S	i	R_{n2} N			IEC	
33	33	3.1	40.9	3570	**A052_40.9 S05 M05A4**	273	**A052_40.9 P63 BN63A4**	273
38	28	3.6	35.1	3420	**A052_35.1 S05 M05A4**	273	**A052_35.1 P63 BN63A4**	273
42	26	3.9	32.2	3340	**A052_32.2 S05 M05A4**	273	**A052_32.2 P63 BN63A4**	273
47	23	4.4	28.6	3220	**A052_28.6 S05 M05A4**	273	**A052_28.6 P63 BN63A4**	273
53	20	4.9	25.5	3110	**A052_25.5 S05 M05A4**	273	**A052_25.5 P63 BN63A4**	273
57	19	5.3	23.8	3050	**A052_23.8 S05 M05A4**	273	**A052_23.8 P63 BN63A4**	273
62	17.3	5.8	13.9	2960	**A052_13.9 S05 M05B6**	273	**A052_13.9 P63 BN63B6**	273
63	17.1	5.9	21.4	2950	**A052_21.4 S05 M05A4**	273	**A052_21.4 P63 BN63A4**	273
73	14.8	6.7	18.6	2830	**A052_18.6 S05 M05A4**	273	**A052_18.6 P63 BN63A4**	273
82	13.1	7.6	16.4	2730	**A052_16.4 S05 M05A4**	273	**A052_16.4 P63 BN63A4**	273
90	11.9	8.4	9.6	2640	**A052_9.6 S05 M05B6**	273	**A052_9.6 P63 BN63B6**	273
97	11.1	9.0	13.9	2590	**A052_13.9 S05 M05A4**	273	**A052_13.9 P63 BN63A4**	273
110	9.8	10.2	12.3	2500	**A052_12.3 S05 M05A4**	273	**A052_12.3 P63 BN63A4**	273
121	8.9	11.2	7.2	2420	**A052_7.2 S05 M05B6**	273	**A052_7.2 P63 BN63B6**	273
128	8.4	11.9	10.6	2380	**A052_10.6 S05 M05A4**	273	**A052_10.6 P63 BN63A4**	273
140	7.7	13.0	9.6	2310	**A052_9.6 S05 M05A4**	273	**A052_9.6 P63 BN63A4**	273
159	6.8	14.7	8.5	2220	**A052_8.5 S05 M05A4**	273	**A052_8.5 P63 BN63A4**	273
187	5.8	17.4	7.2	2110	**A052_7.2 S05 M05A4**	273	**A052_7.2 P63 BN63A4**	273
213	5.1	19.8	6.3	2020	**A052_6.3 S05 M05A4**	273	**A052_6.3 P63 BN63A4**	273
247	4.4	21.8	5.5	1930	**A052_5.5 S05 M05A4**	273	**A052_5.5 P63 BN63A4**	273

0.18 kW

n_2 min-1	M_2 Nm	S	i	R_{n2} N			IEC	
0.52	2917	1.7	1715	50000	**A704_1715 S1 M1SC6**	308	**A704_1715 P71 BN71A6**	309
0.58	2649	3.0	1558	65000	**A804_1558 S1 M1SC6**	311	**A804_1558 P71 BN71A6**	312
0.67	2279	3.5	1340	65000	**A804_1340 S1 M1SC6**	311	**A804_1340 P71 BN71A6**	312
0.77	1989	2.5	1715	50000			**A704_1715 P63 BN63B4**	309
0.83	1836	2.7	1583	50000			**A704_1583 P63 BN63B4**	309
0.98	1561	3.2	1346	50000			**A704_1346 P63 BN63B4**	309
1.1	1441	3.5	1242	50000			**A704_1242 P63 BN63B4**	309
1.3	1186	2.4	697.3	30000	**A604_697.3 S1 M1SC6**	304	**A604_697.3 P71 BN71A6**	305
1.5	996	2.8	585.8	30000	**A604_585.8 S1 M1SC6**	304	**A604_585.8 P71 BN71A6**	305
1.7	902	1.7	778.2	20000			**A504_778.2 P63 BN63B4**	297
1.7	876	3.2	755.4	30000			**A604_755.4 P63 BN63B4**	305
1.9	821	1.8	707.9	20000			**A504_707.9 P63 BN63B4**	297
1.9	809	3.5	697.3	30000			**A604_697.3 P63 BN63B4**	305
2.1	732	2.0	631.2	20000			**A504_631.2 P63 BN63B4**	297
2.3	666	2.3	574.2	20000			**A504_574.2 P63 BN63B4**	297
2.5	614	2.4	529.5	20000			**A504_529.5 P63 BN63B4**	297
2.7	559	2.7	481.6	20000			**A504_481.6 P63 BN63B4**	297
3.0	518	2.9	446.8	20000			**A504_446.8 P63 BN63B4**	297
3.2	471	3.2	406.4	20000			**A504_406.4 P63 BN63B4**	297
3.4	466	1.0	393.2	12000	**A353_393.2 S05 M05B4**	288	**A353_393.2 P63 BN63B4**	289
3.5	447	1.9	376.8	15000	**A413_376.8 S05 M05B4**	292	**A413_376.8 P63 BN63B4**	293
3.6	424	3.5	365.6	20000			**A504_365.6 P63 BN63B4**	297
3.7	422	0.9	356.3	9600	**A303_356.3 S05 M05B4**	284	**A303_356.3 P63 BN63B4**	285
3.9	402	1.3	339.3	12000	**A353_339.3 S05 M05B4**	288	**A353_339.3 P63 BN63B4**	289

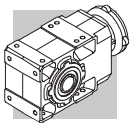

0.18 kW

n_2 min-1	M_2 Nm	S	i	R_{n2} N			IEC	
4.1	384	2.2	324.2	15000	**A413_324.2 S05 M05B4**	292	**A413_324.2 P63 BN63B4**	293
4.2	373	1.0	314.5	9600	**A303_314.5 S05 M05B4**	284	**A303_314.5 P63 BN63B4**	285
4.3	362	1.7	305.4	12000	**A353_305.4 S05 M05B4**	288	**A353_305.4 P63 BN63B4**	289
4.5	346	2.5	291.7	15000	**A413_291.7 S05 M05B4**	292	**A413_291.7 P63 BN63B4**	293
4.9	322	1.2	271.5	9600	**A303_271.5 S05 M05B4**	284	**A303_271.5 P63 BN63B4**	285
4.9	321	1.9	270.7	12000	**A353_270.7 S05 M05B4**	288	**A353_270.7 P63 BN63B4**	289
5.0	311	2.7	262.5	15000	**A413_262.5 S05 M05B4**	292	**A413_262.5 P63 BN63B4**	293
5.3	294	2.0	248.1	12000	**A353_248.1 S05 M05B4**	288	**A353_248.1 P63 BN63B4**	289
5.4	290	1.3	244.3	9600	**A303_244.3 S05 M05B4**	284	**A303_244.3 P63 BN63B4**	285
5.5	285	3.0	240.6	15000	**A413_240.6 S05 M05B4**	292	**A413_240.6 P63 BN63B4**	293
5.9	265	2.3	223.2	12000	**A353_223.2 S05 M05B4**	288	**A353_223.2 P63 BN63B4**	289
6.0	262	1.0	221.3	6200	**A203_221.3 S05 M05B4**	280	**A203_221.3 P63 BN63B4**	281
6.1	258	3.3	217.4	15000	**A413_217.4 S05 M05B4**	292	**A413_217.4 P63 BN63B4**	293
6.1	257	1.4	216.6	9600	**A303_216.6 S05 M05B4**	284	**A303_216.6 P63 BN63B4**	285
6.5	239	2.5	201.8	12000	**A353_201.8 S05 M05B4**	288	**A353_201.8 P63 BN63B4**	289
6.6	236	1.1	199.2	6200	**A203_199.2 S05 M05B4**	280	**A203_199.2 P63 BN63B4**	281
6.6	235	1.5	198.5	9600	**A303_198.5 S05 M05B4**	284	**A303_198.5 P63 BN63B4**	285
7.0	223	2.7	188.3	12000	**A353_188.3 S05 M05B4**	288	**A353_188.3 P63 BN63B4**	289
7.4	212	1.6	178.5	9600	**A303_178.5 S05 M05B4**	284	**A303_178.5 P63 BN63B4**	285
7.4	211	1.2	178.3	6200	**A203_178.3 S05 M05B4**	280	**A203_178.3 P63 BN63B4**	281
7.7	204	2.9	171.8	12000	**A353_171.8 S05 M05B4**	288	**A353_171.8 P63 BN63B4**	289
8.1	194	1.2	163.4	6200	**A203_163.4 S05 M05B4**	280	**A203_163.4 P63 BN63B4**	281
8.2	191	1.8	161.4	9600	**A303_161.4 S05 M05B4**	284	**A303_161.4 P63 BN63B4**	285
8.8	179	1.8	150.7	9600	**A303_150.7 S05 M05B4**	284	**A303_150.7 P63 BN63B4**	285
8.8	179	3.4	150.6	12000	**A353_150.6 S05 M05B4**	288	**A353_150.6 P63 BN63B4**	289
9.0	173	1.3	146.1	6200	**A203_146.1 S05 M05B4**	280	**A203_146.1 P63 BN63B4**	281
9.6	163	1.9	137.4	9600	**A303_137.4 S05 M05B4**	284	**A303_137.4 P63 BN63B4**	285
10.2	153	1.4	129.1	6200	**A203_129.1 S05 M05B4**	280	**A203_129.1 P63 BN63B4**	281
11.0	143	1.5	120.5	6200	**A203_120.5 S05 M05B4**	280	**A203_120.5 P63 BN63B4**	281
11.0	143	2.1	120.5	9600	**A303_120.5 S05 M05B4**	284	**A303_120.5 P63 BN63B4**	285
12.1	129	1.6	109.2	6200	**A203_109.2 S05 M05B4**	280	**A203_109.2 P63 BN63B4**	281
12.1	129	2.3	109.1	9600	**A303_109.1 S05 M05B4**	284	**A303_109.1 P63 BN63B4**	285
13.5	119	2.5	97.5	9600			**A302_97.5 P63 BN63B4**	285
14.3	113	1.8	92.3	6200	**A202_92.3 S05 M05B4**	280	**A202_92.3 P63 BN63B4**	281
14.4	112	0.9	91.6	4120	**A052_91.6 S05 M05B4**	273	**A052_91.6 P63 BN63B4**	273
14.4	112	1.2	91.6	5500	**A102_91.6 S05 M05B4**	276	**A102_91.6 P63 BN63B4**	277
15.2	106	3.0	86.7	9600			**A302_86.7 P63 BN63B4**	285
16.5	98	2.1	79.9	6200	**A202_79.9 S05 M05B4**	280	**A202_79.9 P63 BN63B4**	281
17.3	94	1.1	76.4	3980	**A052_76.4 S05 M05B4**	273	**A052_76.4 P63 BN63B4**	273
17.3	94	1.6	76.4	5500	**A102_76.4 S05 M05B4**	276	**A102_76.4 P63 BN63B4**	277
18.6	87	2.4	71.0	6200	**A202_71.0 S05 M05B4**	280	**A202_71.0 P63 BN63B4**	281
20.0	81	1.2	65.9	3860	**A052_65.9 S05 M05B4**	273	**A052_65.9 P63 BN63B4**	273
20.0	81	1.9	65.9	5500	**A102_65.9 S05 M05B4**	276	**A102_65.9 P63 BN63B4**	277
20.9	77	3.2	63.1	6200	**A202_63.1 S05 M05B4**	280	**A202_63.1 P63 BN63B4**	281
22.5	72	1.4	58.6	3760	**A052_58.6 S05 M05B4**	273	**A052_58.6 P63 BN63B4**	273
22.5	72	2.1	58.6	5500	**A102_58.6 S05 M05B4**	276	**A102_58.6 P63 BN63B4**	277
25.8	63	1.6	51.3	3640	**A052_51.3 S05 M05B4**	273	**A052_51.3 P63 BN63B4**	273
25.8	63	2.4	51.3	5500	**A102_51.3 S05 M05B4**	276	**A102_51.3 P63 BN63B4**	277
29.1	56	1.8	45.4	3540	**A052_45.4 S05 M05B4**	273	**A052_45.4 P63 BN63B4**	273
29.1	56	2.7	45.4	5500	**A102_45.4 S05 M05B4**	276	**A102_45.4 P63 BN63B4**	277
32	50	2.0	40.9	3440	**A052_40.9 S05 M05B4**	273	**A052_40.9 P63 BN63B4**	273

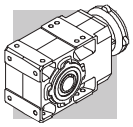

0.18 kW

n_2 min-1	M_2 Nm	S	i	R_{n2} N			IEC	
32	50	3.0	40.9	5500	**A102_40.9 S05 M05B4**	276	**A102_40.9 P63 BN63B4**	277
38	43	2.3	35.1	3310	**A052_35.1 S05 M05B4**	273	**A052_35.1 P63 BN63B4**	273
38	43	3.5	35.1	5380	**A102_35.1 S05 M05B4**	276	**A102_35.1 P63 BN63B4**	277
41	39	2.5	32.2	3240	**A052_32.2 S05 M05B4**	273	**A052_32.2 P63 BN63B4**	273
46	35	2.9	28.6	3130	**A052_28.6 S05 M05B4**	273	**A052_28.6 P63 BN63B4**	273
52	31	3.2	25.5	3040	**A052_25.5 S05 M05B4**	273	**A052_25.5 P63 BN63B4**	273
56	29	3.4	23.8	2980	**A052_23.8 S05 M05B4**	273	**A052_23.8 P63 BN63B4**	273
62	26	3.8	21.4	2890	**A052_21.4 S05 M05B4**	273	**A052_21.4 P63 BN63B4**	273
71	23	4.4	18.6	2780	**A052_18.6 S05 M05B4**	273	**A052_18.6 P63 BN63B4**	273
80	20	5.0	16.4	2680	**A052_16.4 S05 M05B4**	273	**A052_16.4 P63 BN63B4**	273
95	17.1	5.9	13.9	2550	**A052_13.9 S05 M05B4**	273	**A052_13.9 P63 BN63B4**	273
107	15.1	6.6	12.3	2460	**A052_12.3 S05 M05B4**	273	**A052_12.3 P63 BN63B4**	273
125	12.9	7.7	10.6	2350	**A052_10.6 S05 M05B4**	273	**A052_10.6 P63 BN63B4**	273
137	11.8	8.5	9.6	2280	**A052_9.6 S05 M05B4**	273	**A052_9.6 P63 BN63B4**	273
142	11.4	8.8	6.3	2300	**A052_6.3 S1 M1SC6**	273	**A052_6.3 P71 BN71A6**	273
155	10.4	9.6	8.5	2200	**A052_8.5 S05 M05B4**	273	**A052_8.5 P63 BN63B4**	273
183	8.8	11.3	7.2	2090	**A052_7.2 S05 M05B4**	273	**A052_7.2 P63 BN63B4**	273
208	7.8	12.9	6.3	2010	**A052_6.3 S05 M05B4**	273	**A052_6.3 P63 BN63B4**	273
242	6.7	14.2	5.5	1920	**A052_5.5 S05 M05B4**	273	**A052_5.5 P63 BN63B4**	273
284	5.7	16.7	9.6	1830	**A052_9.6 S05 M05A2**	273	**A052_9.6 P63 BN63A2**	273
321	5.0	17.8	8.5	1770	**A052_8.5 S05 M05A2**	273	**A052_8.5 P63 BN63A2**	273
379	4.3	19.9	7.2	1670	**A052_7.2 S05 M05A2**	273	**A052_7.2 P63 BN63A2**	273
431	3.8	21.3	6.3	1610	**A052_6.3 S05 M05A2**	273	**A052_6.3 P63 BN63A2**	273
499	3.2	23.2	5.5	1530	**A052_5.5 S05 M05A2**	273	**A052_5.5 P63 BN63A2**	273

0.25 kW

n_2 min-1	M_2 Nm	S	i	R_{n2} N			IEC	
0.52	4051	1.2	1715	50000	**A704_1715 S1 M1SD6**	308	**A704_1715 P71 BN71B6**	309
0.58	3680	2.2	1558	65000	**A804_1558 S1 M1SD6**	311	**A804_1558 P71 BN71B6**	312
0.67	3165	2.5	1340	65000	**A804_1340 S1 M1SD6**	311	**A804_1340 P71 BN71B6**	312
0.80	2642	1.9	1715	50000			**A704_1715 P71 BN71A4**	309
0.87	2439	2.1	1583	50000			**A704_1583 P71 BN71A4**	309
0.89	2400	3.3	1558	65000			**A804_1558 P71 BN71A4**	312
1.0	2073	2.4	1346	50000			**A704_1346 P71 BN71A4**	309
1.1	1914	2.6	1242	50000			**A704_1242 P71 BN71A4**	309
1.2	1789	2.8	1161	50000			**A704_1161 P71 BN71A4**	309
1.3	1652	3.0	1072	50000			**A704_1072 P71 BN71A4**	309
1.5	1427	3.5	926.5	50000			**A704_926.5 P71 BN71A4**	309
1.8	1199	1.3	778.2	20000			**A504_778.2 P71 BN71A4**	297
1.8	1164	2.4	755.4	30000			**A604_755.4 P71 BN71A4**	305
1.9	1091	1.4	707.9	20000			**A504_707.9 P71 BN71A4**	297
2.0	1074	2.6	697.3	30000			**A604_697.3 P71 BN71A4**	305
2.2	978	2.9	634.6	30000			**A604_634.6 P71 BN71A4**	305
2.2	972	1.5	631.2	20000			**A504_631.2 P71 BN71A4**	297
2.4	902	3.1	585.8	30000			**A604_585.8 P71 BN71A4**	305
2.4	885	1.7	574.2	20000			**A504_574.2 P71 BN71A4**	297
2.5	835	3.4	542.0	30000			**A604_542.0 P71 BN71A4**	305

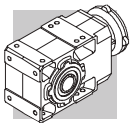

0.25 kW

n_2 min-1	M_2 Nm	S	i	R_{n2} N			IEC	
2.6	816	1.8	529.5	20000			**A504_529.5 P71 BN71A4**	297
2.9	742	2.0	481.6	20000			**A504_481.6 P71 BN71A4**	297
3.1	688	2.2	446.8	20000			**A504_446.8 P71 BN71A4**	297
3.4	626	2.4	406.4	20000			**A504_406.4 P71 BN71A4**	297
3.6	611	1.4	376.8	15000	**A413_376.8 S05 M05C4**	292	**A413_376.8 P71 BN71A4**	293
3.8	563	2.7	365.6	20000			**A504_365.6 P71 BN71A4**	297
3.9	550	0.9	339.3	12000	**A353_339.3 S05 M05C4**	288	**A353_339.3 P71 BN71A4**	289
4.1	526	1.6	324.2	15000	**A413_324.2 S05 M05C4**	292	**A413_324.2 P71 BN71A4**	293
4.1	512	2.9	332.6	20000			**A504_332.6 P71 BN71A4**	297
4.4	495	1.2	305.4	12000	**A353_305.4 S05 M05C4**	288	**A353_305.4 P71 BN71A4**	289
4.7	460	1.8	291.7	15000	**A413_291.7 S05 M05C4**	292	**A413_291.7 P71 BN71A4**	293
4.8	442	3.4	286.8	20000			**A504_286.8 P71 BN71A4**	297
4.9	440	0.9	271.5	9600	**A303_271.5 S05 M05C4**	284	**A303_271.5 P71 BN71A4**	285
5.0	439	1.4	270.7	12000	**A353_270.7 S05 M05C4**	288	**A353_270.7 P71 BN71A4**	289
5.1	426	2.0	262.5	15000	**A413_262.5 S05 M05C4**	292	**A413_262.5 P71 BN71A4**	293
5.4	403	1.5	248.1	12000	**A353_248.1 S05 M05C4**	288	**A353_248.1 P71 BN71A4**	289
5.6	385	1.0	244.3	9600	**A303_244.3 S05 M05C4**	284	**A303_244.3 P71 BN71A4**	285
5.7	379	2.2	240.6	15000	**A413_240.6 S05 M05C4**	292	**A413_240.6 P71 BN71A4**	293
6.0	362	1.7	223.2	12000	**A353_223.2 S05 M05C4**	288	**A353_223.2 P71 BN71A4**	289
6.2	353	2.4	217.4	15000	**A413_217.4 S05 M05C4**	292	**A413_217.4 P71 BN71A4**	293
6.2	351	1.0	216.6	9600	**A303_216.6 S05 M05C4**	284	**A303_216.6 P71 BN71A4**	285
6.6	327	1.8	201.8	12000	**A353_201.8 S05 M05C4**	288	**A353_201.8 P71 BN71A4**	289
7.0	313	1.1	198.5	9600	**A303_198.5 S05 M05C4**	284	**A303_198.5 P71 BN71A4**	285
7.0	311	2.7	197.5	15000	**A413_197.5 S05 M05C4**	292	**A413_197.5 P71 BN71A4**	293
7.1	306	2.0	188.3	12000	**A353_188.3 S05 M05C4**	288	**A353_188.3 P71 BN71A4**	289
7.3	299	2.8	184.4	15000	**A413_184.4 S05 M05C4**	292	**A413_184.4 P71 BN71A4**	293
7.5	290	1.2	178.5	9600	**A303_178.5 S05 M05C4**	284	**A303_178.5 P71 BN71A4**	285
7.8	279	2.2	171.8	12000	**A353_171.8 S05 M05C4**	288	**A353_171.8 P71 BN71A4**	289
8.4	257	0.9	163.4	6200	**A203_163.4 S05 M05C4**	280	**A203_163.4 P71 BN71A4**	281
8.5	254	1.3	161.4	9600	**A303_161.4 S05 M05C4**	284	**A303_161.4 P71 BN71A4**	285
8.9	244	1.4	150.7	9600	**A303_150.7 S05 M05C4**	284	**A303_150.7 P71 BN71A4**	285
8.9	244	2.5	150.6	12000	**A353_150.6 S05 M05C4**	288	**A353_150.6 P71 BN71A4**	289
9.2	237	1.0	146.1	6200	**A203_146.1 S05 M05C4**	280	**A203_146.1 P71 BN71A4**	281
9.8	221	2.6	136.3	12000	**A353_136.3 S05 M05C4**	288	**A353_136.3 P71 BN71A4**	289
10.0	216	1.5	137.4	9600	**A303_137.4 S05 M05C4**	284	**A303_137.4 P71 BN71A4**	285
10.7	203	1.1	129.1	6200	**A203_129.1 S05 M05C4**	280	**A203_129.1 P71 BN71A4**	281
11.1	196	1.1	120.5	6200	**A203_120.5 S05 M05C4**	280	**A203_120.5 P71 BN71A4**	281
11.1	195	1.5	120.5	9600	**A303_120.5 S05 M05C4**	284	**A303_120.5 P71 BN71A4**	285
11.5	190	3.0	116.9	12000	**A353_116.9 S05 M05C4**	288	**A353_116.9 P71 BN71A4**	289
12.6	172	1.2	109.2	6200	**A203_109.2 S05 M05C4**	280	**A203_109.2 P71 BN71A4**	281
12.7	172	1.7	109.1	9600	**A303_109.1 S05 M05C4**	284	**A303_109.1 P71 BN71A4**	285
12.7	171	3.1	105.5	12000	**A353_105.5 S05 M05C4**	288	**A353_105.5 P71 BN71A4**	289
14.2	159	1.9	97.5	9600			**A302_97.5 P71 BN71A4**	285
14.4	156	3.5	95.6	12000			**A352_95.6 P71 BN71A4**	289
14.5	155	1.3	92.3	6200	**A202_92.3 S05 M05C4**	280	**A202_92.3 P71 BN71A4**	281
15.9	141	2.3	86.7	9600			**A302_86.7 P71 BN71A4**	285
16.8	134	1.6	79.9	6200	**A202_79.9 S05 M05C4**	280	**A202_79.9 P71 BN71A4**	281
17.5	128	1.2	76.4	5500	**A102_76.4 S05 M05C4**	276	**A102_76.4 P71 BN71A4**	277
18.0	125	2.8	76.5	9600			**A302_76.5 P71 BN71A4**	285
19.4	116	1.8	71.0	6200	**A202_71.0 S05 M05C4**	280	**A202_71.0 P71 BN71A4**	281
20.3	110	0.9	65.9	3610	**A052_65.9 S05 M05C4**	273	**A052_65.9 P71 BN71A4**	273

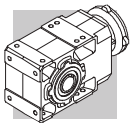

0.25 kW

n_2 min-1	M_2 Nm	S	i	R_{n2} N			IEC	
20.3	110	1.4	65.9	5500	**A102_65.9 S05 M05C4**	276	**A102_65.9 P71 BN71A4**	277
21.2	106	2.3	63.1	6200	**A202_63.1 S05 M05C4**	280	**A202_63.1 P71 BN71A4**	281
22.9	98	1.0	58.6	3540	**A052_58.6 S05 M05C4**	273	**A052_58.6 P71 BN71A4**	273
23.5	95	1.6	58.6	5500	**A102_58.6 S05 M05C4**	276	**A102_58.6 P71 BN71A4**	277
25.0	90	2.8	53.7	6200	**A202_53.7 S05 M05C4**	280	**A202_53.7 P71 BN71A4**	281
26.1	86	1.2	51.3	3450	**A052_51.3 S05 M05C4**	273	**A052_51.3 P71 BN71A4**	273
26.1	86	1.7	51.3	5500	**A102_51.3 S05 M05C4**	276	**A102_51.3 P71 BN71A4**	277
28.6	79	3.2	48.3	6180	**A202_48.3 S05 M05C4**	280	**A202_48.3 P71 BN71A4**	281
29.5	76	1.3	45.4	3370	**A052_45.4 S05 M05C4**	273	**A052_45.4 P71 BN71A4**	273
29.5	76	2.0	45.4	5500	**A102_45.4 S05 M05C4**	276	**A102_45.4 P71 BN71A4**	277
33	68	1.5	40.9	3290	**A052_40.9 S05 M05C4**	273	**A052_40.9 P71 BN71A4**	273
34	66	2.3	40.9	5500	**A102_40.9 S05 M05C4**	276	**A102_40.9 P71 BN71A4**	277
38	59	1.7	35.1	3180	**A052_35.1 S05 M05C4**	273	**A052_35.1 P71 BN71A4**	273
38	59	2.5	35.1	5260	**A102_35.1 S05 M05C4**	276	**A102_35.1 P71 BN71A4**	277
42	54	1.9	32.2	3120	**A052_32.2 S05 M05C4**	273	**A052_32.2 P71 BN71A4**	273
43	52	2.9	32.2	5500	**A102_32.2 S05 M05C4**	276	**A102_32.2 P71 BN71A4**	277
47	48	2.1	28.6	3030	**A052_28.6 S05 M05C4**	273	**A052_28.6 P71 BN71A4**	273
47	48	3.1	28.6	4970	**A102_28.6 S05 M05C4**	276	**A102_28.6 P71 BN71A4**	277
53	43	2.3	25.5	2940	**A052_25.5 S05 M05C4**	273	**A052_25.5 P71 BN71A4**	273
56	40	2.5	23.8	2890	**A052_23.8 S05 M05C4**	273	**A052_23.8 P71 BN71A4**	273
63	36	2.8	21.4	2810	**A052_21.4 S05 M05C4**	273	**A052_21.4 P71 BN71A4**	273
72	31	3.2	18.6	2710	**A052_18.6 S05 M05C4**	273	**A052_18.6 P71 BN71A4**	273
84	27	3.7	16.4	2620	**A052_16.4 S05 M05C4**	273	**A052_16.4 P71 BN71A4**	273
99	23	4.4	13.9	2500	**A052_13.9 S05 M05C4**	273	**A052_13.9 P71 BN71A4**	273
112	20	5.0	12.3	2420	**A052_12.3 S05 M05C4**	273	**A052_12.3 P71 BN71A4**	273
131	17.2	5.8	10.6	2310	**A052_10.6 S05 M05C4**	273	**A052_10.6 P71 BN71A4**	273
144	15.7	6.4	9.6	2260	**A052_9.6 S05 M05C4**	273	**A052_9.6 P71 BN71A4**	273
162	13.9	7.2	8.5	2180	**A052_8.5 S05 M05C4**	273	**A052_8.5 P71 BN71A4**	273
191	11.7	8.5	7.2	2070	**A052_7.2 S05 M05C4**	273	**A052_7.2 P71 BN71A4**	273
218	10.3	9.7	6.3	1990	**A052_6.3 S05 M05C4**	273	**A052_6.3 P71 BN71A4**	273
252	8.9	10.7	5.5	1900	**A052_5.5 S05 M05C4**	273	**A052_5.5 P71 BN71A4**	273
285	7.9	12.1	9.6	1820	**A052_9.6 S05 M05B2**	273	**A052_9.6 P63 BN63B2**	273
322	7.0	12.9	8.5	1750	**A052_8.5 S05 M05B2**	273	**A052_8.5 P63 BN63B2**	273
380	5.9	14.4	7.2	1660	**A052_7.2 S05 M05B2**	273	**A052_7.2 P63 BN63B2**	273
433	5.2	15.4	6.3	1590	**A052_6.3 S05 M05B2**	273	**A052_6.3 P63 BN63B2**	273
501	4.5	16.7	5.5	1520	**A052_5.5 S05 M05B2**	273	**A052_5.5 P63 BN63B2**	273

0.37 kW

n_2 min-1	M_2 Nm	S	i	R_{n2} N			IEC	
0.56	5644	2.5	1632	75000	**A904_1632 S1 M1LA6**	314	**A904_1632 P80 BN80A6**	315
0.63	4972	1.6	1438	65000	**A804_1438 S1 M1LA6**	311	**A804_1438 P80 BN80A6**	312
0.74	4226	3.3	1222	75000	**A904_1222 S1 M1LA6**	314	**A904_1222 P80 BN80A6**	315
0.80	3939	1.3	1715	50000	**A704_1715 S1 M1SD4**	308	**A704_1715 P71 BN71B4**	309
0.87	3636	1.4	1583	50000	**A704_1583 S1 M1SD4**	308	**A704_1583 P71 BN71B4**	309
0.88	3577	2.2	1558	65000	**A804_1558 S1 M1SD4**	311	**A804_1558 P71 BN71B4**	312
0.95	3302	2.4	1438	65000	**A804_1438 S1 M1SD4**	311	**A804_1438 P71 BN71B4**	312
1.0	3091	1.6	1346	50000	**A704_1346 S1 M1SD4**	308	**A704_1346 P71 BN71B4**	309

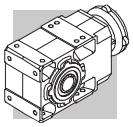

0.37 kW

n_2 min-1	M_2 Nm	S	i	R_{n2} N			IEC	
1.0	3077	2.6	1340	65000	**A804_1340 S1 M1SD4**	311	**A804_1340 P71 BN71B4**	312
1.1	2853	1.8	1242	50000	**A704_1242 S1 M1SD4**	308	**A704_1242 P71 BN71B4**	309
1.1	2841	2.8	1237	65000	**A804_1237 S1 M1SD4**	311	**A804_1237 P71 BN71B4**	312
1.2	2668	1.9	1161	50000	**A704_1161 S1 M1SD4**	308	**A704_1161 P71 BN71B4**	309
1.3	2492	3.2	1085	65000	**A804_1085 S1 M1SD4**	311	**A804_1085 P71 BN71B4**	312
1.3	2462	2.0	1072	50000	**A704_1072 S1 M1SD4**	308	**A704_1072 P71 BN71B4**	309
1.4	2300	3.5	1001	65000	**A804_1001 S1 M1SD4**	311	**A804_1001 P71 BN71B4**	312
1.5	2128	2.3	926.5	50000	**A704_926.5 S1 M1SD4**	308	**A704_926.5 P71 BN71B4**	309
1.6	1964	2.5	855.3	50000	**A704_855.3 S1 M1SD4**	308	**A704_855.3 P71 BN71B4**	309
1.8	1754	2.8	763.9	50000	**A704_763.9 S1 M1SD4**	308	**A704_763.9 P71 BN71B4**	309
1.8	1735	1.6	755.4	30000	**A604_755.4 S1 M1SD4**	304	**A604_755.4 P71 BN71B4**	305
1.9	1626	0.9	707.9	20000	**A504_707.9 S1 M1SD4**	296	**A504_707.9 P71 BN71B4**	297
1.9	1619	3.1	705.1	50000	**A704_705.1 S1 M1SD4**	308	**A704_705.1 P71 BN71B4**	309
2.0	1601	1.7	697.3	30000	**A604_697.3 S1 M1SD4**	304	**A604_697.3 P71 BN71B4**	305
2.1	1481	3.4	644.6	50000	**A704_644.6 S1 M1SD4**	308	**A704_644.6 P71 BN71B4**	309
2.2	1457	1.9	634.6	30000	**A604_634.6 S1 M1SD4**	304	**A604_634.6 P71 BN71B4**	305
2.2	1450	1.0	631.2	20000	**A504_631.2 S1 M1SD4**	296	**A504_631.2 P71 BN71B4**	297
2.3	1345	2.1	585.8	30000	**A604_585.8 S1 M1SD4**	304	**A604_585.8 P71 BN71B4**	305
2.4	1319	1.1	574.2	20000	**A504_574.2 S1 M1SD4**	296	**A504_574.2 P71 BN71B4**	297
2.5	1245	2.2	542.0	30000	**A604_542.0 S1 M1SD4**	304	**A604_542.0 P71 BN71B4**	305
2.6	1216	1.2	529.5	20000	**A504_529.5 S1 M1SD4**	296	**A504_529.5 P71 BN71B4**	297
2.7	1149	2.4	500.3	30000	**A604_500.3 S1 M1SD4**	304	**A604_500.3 P71 BN71B4**	305
2.8	1106	1.4	481.6	20000	**A504_481.6 S1 M1SD4**	296	**A504_481.6 P71 BN71B4**	297
3.1	1026	1.5	446.8	20000	**A504_446.8 S1 M1SD4**	296	**A504_446.8 P71 BN71B4**	297
3.1	1007	2.8	438.4	30000	**A604_438.4 S1 M1SD4**	304	**A604_438.4 P71 BN71B4**	305
3.4	933	1.6	406.4	20000	**A504_406.4 S1 M1SD4**	296	**A504_406.4 P71 BN71B4**	297
3.4	929	3.0	404.7	30000	**A604_404.7 S1 M1SD4**	304	**A604_404.7 P71 BN71B4**	305
3.6	885	1.0	376.8	15000	**A413_376.8 S1 M1SD4**	292	**A413_376.8 P71 BN71B4**	293
3.7	840	1.8	365.6	20000	**A504_365.6 S1 M1SD4**	296	**A504_365.6 P71 BN71B4**	297
3.9	807	3.5	351.2	30000	**A604_351.2 S1 M1SD4**	304	**A604_351.2 P71 BN71B4**	305
4.1	764	2.0	332.6	20000	**A504_332.6 S1 M1SD4**	296	**A504_332.6 P71 BN71B4**	297
4.2	761	1.1	324.2	15000	**A413_324.2 S1 M1SD4**	292	**A413_324.2 P71 BN71B4**	293
4.7	685	1.2	291.7	15000	**A413_291.7 S1 M1SD4**	292	**A413_291.7 P71 BN71B4**	293
4.8	659	2.3	286.8	20000	**A504_286.8 S1 M1SD4**	296	**A504_286.8 P71 BN71B4**	297
5.1	636	0.9	270.7	12000	**A353_270.7 S1 M1SD4**	288	**A353_270.7 P71 BN71B4**	289
5.2	616	1.4	262.5	15000	**A413_262.5 S1 M1SD4**	292	**A413_262.5 P71 BN71B4**	293
5.3	599	2.5	260.9	20000	**A504_260.9 S1 M1SD4**	296	**A504_260.9 P71 BN71B4**	297
5.5	583	1.0	248.1	12000	**A353_248.1 S1 M1SD4**	288	**A353_248.1 P71 BN71B4**	289
5.7	565	1.5	240.6	15000	**A413_240.6 S1 M1SD4**	292	**A413_240.6 P71 BN71B4**	293
5.9	533	2.8	232.0	20000	**A504_232.0 S1 M1SD4**	296	**A504_232.0 P71 BN71B4**	297
6.1	524	1.1	223.2	12000	**A353_223.2 S1 M1SD4**	288	**A353_223.2 P71 BN71B4**	289
6.3	511	1.7	217.4	15000	**A413_217.4 S1 M1SD4**	292	**A413_217.4 P71 BN71B4**	293
6.5	485	3.1	211.0	20000	**A504_211.0 S1 M1SD4**	296	**A504_211.0 P71 BN71B4**	297
6.8	474	1.3	201.8	12000	**A353_201.8 S1 M1SD4**	288	**A353_201.8 P71 BN71B4**	289
6.9	464	1.8	197.5	15000	**A413_197.5 S1 M1SD4**	292	**A413_197.5 P71 BN71B4**	293
7.2	448	3.4	190.6	20000	**A503_190.6 S1 M1SD4**	296	**A503_190.6 P71 BN71B4**	297
7.3	442	1.4	188.3	12000	**A353_188.3 S1 M1SD4**	288	**A353_188.3 P71 BN71B4**	289
7.4	433	2.0	184.4	15000	**A413_184.4 S1 M1SD4**	292	**A413_184.4 P71 BN71B4**	293
8.0	403	1.5	171.8	12000	**A353_171.8 S1 M1SD4**	288	**A353_171.8 P71 BN71B4**	289
9.1	354	0.9	150.7	9600	**A303_150.7 S1 M1SD4**	284	**A303_150.7 P71 BN71B4**	285
9.1	354	1.7	150.6	12000	**A353_150.6 S1 M1SD4**	288	**A353_150.6 P71 BN71B4**	289

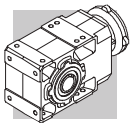

0.37 kW

n_2 min-1	M_2 Nm	S	i	R_{n2} N			IEC	
9.3	345	2.5	146.9	15000	**A413_146.9 S1 M1SD4**	292	**A413_146.9 P71 BN71B4**	293
10.0	323	1.0	137.4	9600	**A303_137.4 S1 M1SD4**	284	**A303_137.4 P71 BN71B4**	285
10.0	320	1.8	136.3	12000	**A353_136.3 S1 M1SD4**	288	**A353_136.3 P71 BN71B4**	289
11.4	283	1.1	120.5	9600	**A303_120.5 S1 M1SD4**	284	**A303_120.5 P71 BN71B4**	285
11.7	275	2.0	116.9	12000	**A353_116.9 S1 M1SD4**	288	**A353_116.9 P71 BN71B4**	289
11.8	272	3.1	115.9	15000	**A413_115.9 S1 M1SD4**	292	**A413_115.9 P71 BN71B4**	293
12.6	256	1.2	109.1	9600	**A303_109.1 S1 M1SD4**	284	**A303_109.1 P71 BN71B4**	285
13.0	248	2.1	105.5	12000	**A353_105.5 S1 M1SD4**	288	**A353_105.5 P71 BN71B4**	289
14.1	237	1.3	97.5	9600			**A302_97.5 P71 BN71B4**	285
14.3	232	2.3	95.6	12000	**A352_95.6 S1 M1SD4**	288	**A352_95.6 P71 BN71B4**	289
15.8	210	1.5	86.7	9600			**A302_86.7 P71 BN71B4**	285
16.6	200	3.0	82.5	12000	**A352_82.5 S1 M1SD4**	288	**A352_82.5 P71 BN71B4**	289
17.2	194	1.1	79.9	6200			**A202_79.9 P71 BN71B4**	281
17.9	186	1.9	76.5	9600	**A302_76.5 S1 M1SD4**	284	**A302_76.5 P71 BN71B4**	285
18.4	180	3.3	74.3	12000	**A352_74.3 S1 M1SD4**	288	**A352_74.3 P71 BN71B4**	289
19.3	172	1.2	71.0	6200			**A202_71.0 P71 BN71B4**	281
20.7	160	2.4	66.0	9350	**A302_66.0 S1 M1SD4**	284	**A302_66.0 P71 BN71B4**	285
20.8	160	0.9	65.9	5500			**A102_65.9 P71 BN71B4**	277
21.7	153	1.6	63.1	6200	**A202_63.1 S1 M1SD4**	280	**A202_63.1 P71 BN71B4**	281
23.1	144	2.8	59.4	9080	**A302_59.4 S1 M1SD4**	284	**A302_59.4 P71 BN71B4**	285
23.4	142	1.1	58.6	5500			**A102_58.6 P71 BN71B4**	277
25.5	130	1.9	53.7	6090	**A202_53.7 S1 M1SD4**	280	**A202_53.7 P71 BN71B4**	281
26.0	128	3.2	52.7	8790	**A302_52.7 S1 M1SD4**	284	**A302_52.7 P71 BN71B4**	285
26.7	124	1.2	51.3	5490	**A102_51.3 S1 M1SD4**	276	**A102_51.3 P71 BN71B4**	277
28.4	117	2.1	48.3	5940	**A202_48.3 S1 M1SD4**	280	**A202_48.3 P71 BN71B4**	281
28.4	117	3.5	48.3	8580	**A302_48.3 S1 M1SD4**	284	**A302_48.3 P71 BN71B4**	285
30	110	0.9	45.4	3060	**A052_45.4 S1 M1SD4**	273	**A052_45.4 P71 BN71B4**	273
30	110	1.4	45.4	5350	**A102_45.4 S1 M1SD4**	276	**A102_45.4 P71 BN71B4**	277
32	105	2.4	43.2	5780	**A202_43.2 S1 M1SD4**	280	**A202_43.2 P71 BN71B4**	281
34	99	1.0	40.9	3020	**A052_40.9 S1 M1SD4**	273	**A052_40.9 P71 BN71B4**	273
34	99	1.5	40.9	5500	**A102_40.9 S1 M1SD4**	276	**A102_40.9 P71 BN71B4**	277
35	96	2.6	39.6	5650	**A202_39.6 S1 M1SD4**	280	**A202_39.6 P71 BN71B4**	281
39	86	2.9	35.4	5480	**A202_35.4 S1 M1SD4**	280	**A202_35.4 P71 BN71B4**	281
39	85	1.2	35.1	2950	**A052_35.1 S1 M1SD4**	273	**A052_35.1 P71 BN71B4**	273
39	85	1.8	35.1	5040	**A102_35.1 S1 M1SD4**	276	**A102_35.1 P71 BN71B4**	277
43	78	1.3	32.2	2900	**A052_32.2 S1 M1SD4**	273	**A052_32.2 P71 BN71B4**	273
43	78	1.9	32.2	5500	**A102_32.2 S1 M1SD4**	276	**A102_32.2 P71 BN71B4**	277
44	76	3.3	31.3	5310	**A202_31.3 S1 M1SD4**	280	**A202_31.3 P71 BN71B4**	281
47	71	3.5	29.2	5210	**A202_29.2 S1 M1SD4**	280	**A202_29.2 P71 BN71B4**	281
48	69	1.4	28.6	2840	**A052_28.6 S1 M1SD4**	273	**A052_28.6 P71 BN71B4**	273
48	69	2.2	28.6	4790	**A102_28.6 S1 M1SD4**	276	**A102_28.6 P71 BN71B4**	277
54	62	1.6	25.5	2770	**A052_25.5 S1 M1SD4**	273	**A052_25.5 P71 BN71B4**	273
54	62	2.4	25.5	5500	**A102_25.5 S1 M1SD4**	276	**A102_25.5 P71 BN71B4**	277
58	58	1.7	23.8	2730	**A052_23.8 S1 M1SD4**	273	**A052_23.8 P71 BN71B4**	273
58	58	2.6	23.8	4570	**A102_23.8 S1 M1SD4**	276	**A102_23.8 P71 BN71B4**	277
64	52	1.9	21.4	2670	**A052_21.4 S1 M1SD4**	273	**A052_21.4 P71 BN71B4**	273
64	52	2.9	21.4	5270	**A102_21.4 S1 M1SD4**	276	**A102_21.4 P71 BN71B4**	277
74	45	2.2	18.6	2590	**A052_18.6 S1 M1SD4**	273	**A052_18.6 P71 BN71B4**	273
74	45	3.3	18.6	4270	**A102_18.6 S1 M1SD4**	276	**A102_18.6 P71 BN71B4**	277
83	40	2.5	16.4	2510	**A052_16.4 S1 M1SD4**	273	**A052_16.4 P71 BN71B4**	273
98	34	3.0	13.9	2410	**A052_13.9 S1 M1SD4**	273	**A052_13.9 P71 BN71B4**	273

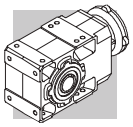

0.37 kW

n_2 min-1	M_2 Nm	S	i	R_{n2} N			IEC	
111	30	3.3	12.3	2350	**A052_12.3 S1 M1SD4**	273	**A052_12.3 P71 BN71B4**	273
130	26	3.9	10.6	2240	**A052_10.6 S1 M1SD4**	273	**A052_10.6 P71 BN71B4**	273
142	23	4.3	9.6	2190	**A052_9.6 S1 M1SD4**	273	**A052_9.6 P71 BN71B4**	273
161	21	4.8	8.5	2120	**A052_8.5 S1 M1SD4**	273	**A052_8.5 P71 BN71B4**	273
190	17.5	5.7	7.2	2030	**A052_7.2 S1 M1SD4**	273	**A052_7.2 P71 BN71B4**	273
216	15.4	6.5	6.3	1950	**A052_6.3 S1 M1SD4**	273	**A052_6.3 P71 BN71B4**	273
228	14.6	6.8	12.3	1920	**A052_12.3 S05 M05C2**	273	**A052_12.3 P71 BN71A2**	273
251	13.3	7.2	5.5	1870	**A052_5.5 S1 M1SD4**	273	**A052_5.5 P71 BN71B4**	273
265	12.5	6.4	10.6	1830	**A052_10.6 S05 M05C2**	273	**A052_10.6 P71 BN71A2**	273
291	11.4	8.3	9.6	1790	**A052_9.6 S05 M05C2**	273	**A052_9.6 P71 BN71A2**	273
331	10.0	9.0	8.5	1720	**A052_8.5 S05 M05C2**	273	**A052_8.5 P71 BN71A2**	273
388	8.6	9.9	7.2	1640	**A052_7.2 S05 M05C2**	273	**A052_7.2 P71 BN71A2**	273
445	7.5	10.7	6.3	1570	**A052_6.3 S05 M05C2**	273	**A052_6.3 P71 BN71A2**	273
512	6.5	11.6	5.5	1500	**A052_5.5 S05 M05C2**	273		

0.55 kW

n_2 min-1	M_2 Nm	S	i	R_{n2} N			IEC	
0.56	8299	1.7	1632	75000	**A904_1632 S2 M2SA6**	314	**A904_1632 P80 BN80B6**	315
0.64	7310	1.1	1438	65000	**A804_1438 S2 M2SA6**	311	**A804_1438 P80 BN80B6**	312
0.75	6213	2.3	1222	75000	**A904_1222 S2 M2SA6**	314	**A904_1222 P80 BN80B6**	315
0.80	5813	0.9	1715	50000	**A704_1715 S1 M1LA4**	308	**A704_1715 P80 BN80A4**	309
0.85	5532	2.5	1632	75000	**A904_1632 S1 M1LA4**	314	**A904_1632 P80 BN80A4**	315
0.87	5365	0.9	1583	50000	**A704_1583 S1 M1LA4**	308	**A704_1583 P80 BN80A4**	309
0.89	5279	1.5	1558	65000	**A804_1558 S1 M1LA4**	311	**A804_1558 P80 BN80A4**	312
0.92	5070	2.8	1507	75000	**A904_1507 S1 M1LA4**	314	**A904_1507 P80 BN80A4**	315
0.96	4873	1.6	1438	65000	**A804_1438 S1 M1LA4**	311	**A804_1438 P80 BN80A4**	312
1.0	4561	1.1	1346	50000	**A704_1346 S1 M1LA4**	308	**A704_1346 P80 BN80A4**	309
1.0	4541	1.8	1340	65000	**A804_1340 S1 M1LA4**	311	**A804_1340 P80 BN80A4**	312
1.0	4455	3.1	1324	75000	**A904_1324 S1 M1LA4**	314	**A904_1324 P80 BN80A4**	315
1.1	4211	1.2	1242	50000	**A704_1242 S1 M1LA4**	308	**A704_1242 P80 BN80A4**	309
1.1	4192	1.9	1237	65000	**A804_1237 S1 M1LA4**	311	**A804_1237 P80 BN80A4**	312
1.1	4112	3.4	1222	75000	**A904_1222 S1 M1LA4**	314	**A904_1222 P80 BN80A4**	315
1.2	3937	1.3	1161	50000	**A704_1161 S1 M1LA4**	308	**A704_1161 P80 BN80A4**	309
1.3	3677	2.2	1085	65000	**A804_1085 S1 M1LA4**	311	**A804_1085 P80 BN80A4**	312
1.3	3634	1.4	1072	50000	**A704_1072 S1 M1LA4**	308	**A704_1072 P80 BN80A4**	309
1.4	3394	2.4	1001	65000	**A804_1001 S1 M1LA4**	311	**A804_1001 P80 BN80A4**	312
1.5	3140	1.6	926.5	50000	**A704_926.5 S1 M1LA4**	308	**A704_926.5 P80 BN80A4**	309
1.5	3046	2.6	898.7	65000	**A804_898.7 S1 M1LA4**	311	**A804_898.7 P80 BN80A4**	312
1.6	2899	1.7	855.3	50000	**A704_855.3 S1 M1LA4**	308	**A704_855.3 P80 BN80A4**	309
1.7	2811	2.8	829.5	65000	**A804_829.5 S1 M1LA4**	311	**A804_829.5 P80 BN80A4**	312
1.8	2589	1.9	763.9	50000	**A704_763.9 S1 M1LA4**	308	**A704_763.9 P80 BN80A4**	309
1.8	2583	3.1	762.1	65000	**A804_762.1 S1 M1LA4**	311	**A804_762.1 P80 BN80A4**	312
1.8	2560	1.1	755.4	30000	**A604_755.4 S1 M1LA4**	304	**A604_755.4 P80 BN80A4**	305
2.0	2390	2.1	705.1	50000	**A704_705.1 S1 M1LA4**	308	**A704_705.1 P80 BN80A4**	309
2.0	2384	3.4	703.5	65000	**A804_703.5 S1 M1LA4**	311	**A804_703.5 P80 BN80A4**	312
2.0	2363	1.2	697.3	30000	**A604_697.3 S1 M1LA4**	304	**A604_697.3 P80 BN80A4**	305
2.1	2185	2.3	644.6	50000	**A704_644.6 S1 M1LA4**	308	**A704_644.6 P80 BN80A4**	309

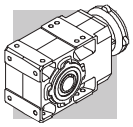

0.55 kW

n_2 min-1	M_2 Nm	S	i	R_{n2} N			IEC	
2.2	2151	1.3	634.6	30000	**A604_634.6 S1 M1LA4**	304	**A604_634.6 P80 BN80A4**	305
2.3	2017	2.5	595.0	50000	**A704_595.0 S1 M1LA4**	308	**A704_595.0 P80 BN80A4**	309
2.4	1985	1.4	585.8	30000	**A604_585.8 S1 M1LA4**	304	**A604_585.8 P80 BN80A4**	305
2.5	1837	1.5	542.0	30000	**A604_542.0 S1 M1LA4**	304	**A604_542.0 P80 BN80A4**	305
2.7	1747	2.9	515.4	50000	**A704_515.4 S1 M1LA4**	308	**A704_515.4 P80 BN80A4**	309
2.8	1696	1.7	500.3	30000	**A604_500.3 S1 M1LA4**	304	**A604_500.3 P80 BN80A4**	305
2.9	1632	0.9	481.6	20000	**A504_481.6 S1 M1LA4**	296	**A504_481.6 P80 BN80A4**	297
2.9	1612	3.1	475.8	50000	**A704_475.8 S1 M1LA4**	308	**A704_475.8 P80 BN80A4**	309
3.1	1514	1.0	446.8	20000	**A504_446.8 S1 M1LA4**	296	**A504_446.8 P80 BN80A4**	297
3.1	1486	1.9	438.4	30000	**A604_438.4 S1 M1LA4**	304	**A604_438.4 P80 BN80A4**	305
3.4	1378	1.1	406.4	20000	**A504_406.4 S1 M1LA4**	296	**A504_406.4 P80 BN80A4**	297
3.4	1372	2.0	404.7	30000	**A604_404.7 S1 M1LA4**	304	**A604_404.7 P80 BN80A4**	305
3.8	1239	1.2	365.6	20000	**A504_365.6 S1 M1LA4**	296	**A504_365.6 P80 BN80A4**	297
3.9	1190	2.4	351.2	30000	**A604_351.2 S1 M1LA4**	304	**A604_351.2 P80 BN80A4**	305
4.1	1127	1.3	332.6	20000	**A504_332.6 S1 M1LA4**	296	**A504_332.6 P80 BN80A4**	297
4.3	1099	2.5	324.2	30000	**A604_324.2 S1 M1LA4**	304	**A604_324.2 P80 BN80A4**	305
4.8	972	1.5	286.8	20000	**A504_286.8 S1 M1LA4**	296	**A504_286.8 P80 BN80A4**	297
4.8	970	2.9	286.3	30000	**A604_286.3 S1 M1LA4**	304	**A604_286.3 P80 BN80A4**	305
5.2	896	3.1	264.3	30000	**A604_264.3 S1 M1LA4**	304	**A604_264.3 P80 BN80A4**	305
5.3	910	0.9	262.5	15000	**A413_262.5 S1 M1LA4**	292	**A413_262.5 P80 BN80A4**	293
5.3	884	1.7	260.9	20000	**A504_260.9 S1 M1LA4**	296	**A504_260.9 P80 BN80A4**	297
5.7	834	1.0	240.6	15000	**A413_240.6 S1 M1LA4**	292	**A413_240.6 P80 BN80A4**	293
5.9	786	1.9	232.0	20000	**A504_232.0 S1 M1LA4**	296	**A504_232.0 P80 BN80A4**	297
6.3	753	1.1	217.4	15000	**A413_217.4 S1 M1LA4**	292	**A413_217.4 P80 BN80A4**	293
6.5	715	2.1	211.0	20000	**A504_211.0 S1 M1LA4**	296	**A504_211.0 P80 BN80A4**	297
7.0	685	1.2	197.5	15000	**A413_197.5 S1 M1LA4**	292	**A413_197.5 P80 BN80A4**	293
7.1	673	3.0	194.2	30000	**A553_194.2 S1 M1LA4**	300	**A553_194.2 P80 BN80A4**	301
7.2	660	2.3	190.6	20000	**A503_190.6 S1 M1LA4**	296	**A503_190.6 P80 BN80A4**	297
7.3	653	0.9	188.3	12000	**A353_188.3 S1 M1LA4**	288	**A353_188.3 P80 BN80A4**	289
7.5	639	1.3	184.4	15000	**A413_184.4 S1 M1LA4**	292	**A413_184.4 P80 BN80A4**	293
7.9	607	3.3	175.0	30000	**A553_175.0 S1 M1LA4**	300	**A553_175.0 P80 BN80A4**	301
8.0	601	2.5	173.4	20000	**A503_173.4 S1 M1LA4**	296	**A503_173.4 P80 BN80A4**	297
8.0	595	1.0	171.8	12000	**A353_171.8 S1 M1LA4**	288	**A353_171.8 P80 BN80A4**	289
9.0	532	2.8	154.6	20000	**A503_154.6 S1 M1LA4**	296	**A503_154.6 P80 BN80A4**	297
9.2	522	1.1	150.6	12000	**A353_150.6 S1 M1LA4**	288	**A353_150.6 P80 BN80A4**	289
9.4	509	1.7	146.9	15000	**A413_146.9 S1 M1LA4**	292	**A413_146.9 P80 BN80A4**	293
9.9	484	3.1	140.6	20000	**A503_140.6 S1 M1LA4**	296	**A503_140.6 P80 BN80A4**	297
10.1	472	1.2	136.3	12000	**A353_136.3 S1 M1LA4**	288	**A353_136.3 P80 BN80A4**	289
10.7	446	3.4	129.7	20000	**A503_129.7 S1 M1LA4**	296	**A503_129.7 P80 BN80A4**	297
11.8	405	1.4	116.9	12000	**A353_116.9 S1 M1LA4**	288	**A353_116.9 P80 BN80A4**	289
11.9	402	2.1	115.9	15000	**A413_115.9 S1 M1LA4**	292	**A413_115.9 P80 BN80A4**	293
13.1	366	1.4	105.5	12000	**A353_105.5 S1 M1LA4**	288	**A353_105.5 P80 BN80A4**	289
14.2	349	0.9	97.5	9600			**A302_97.5 P80 BN80A4**	285
14.4	342	1.6	95.6	12000	**A352_95.6 S1 M1LA4**	288	**A352_95.6 P80 BN80A4**	289
14.9	321	2.5	92.8	15000	**A413_92.8 S1 M1LA4**	292	**A413_92.8 P80 BN80A4**	293
15.9	310	1.0	86.7	9420			**A302_86.7 P80 BN80A4**	285
16.7	295	2.0	82.5	12000	**A352_82.5 S1 M1LA4**	288	**A352_82.5 P80 BN80A4**	289
17.4	284	3.0	79.2	15000	**A412_79.2 S1 M1LA4**	292	**A412_79.2 P80 BN80A4**	293
18.0	274	1.3	76.5	9180	**A302_76.5 S1 M1LA4**	284	**A302_76.5 P80 BN80A4**	285
18.6	266	2.3	74.3	12000	**A352_74.3 S1 M1LA4**	288	**A352_74.3 P80 BN80A4**	289
19.4	255	3.3	71.3	15000	**A412_71.3 S1 M1LA4**	292	**A412_71.3 P80 BN80A4**	293

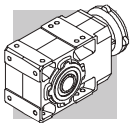

0.55 kW

n_2 min-1	M_2 Nm	S	i	R_{n2} N			IEC	
20.9	236	1.6	66.0	8880	**A302_66.0 S1 M1LA4**	284	**A302_66.0 P80 BN80A4**	285
21.0	236	2.5	65.8	12000	**A352_65.8 S1 M1LA4**	288	**A352_65.8 P80 BN80A4**	289
21.9	226	1.1	63.1	5840	**A202_63.1 S1 M1LA4**	280	**A202_63.1 P80 BN80A4**	281
22.9	216	2.8	60.4	12000	**A352_60.4 S1 M1LA4**	288	**A352_60.4 P80 BN80A4**	289
23.2	213	1.9	59.4	8660	**A302_59.4 S1 M1LA4**	284	**A302_59.4 P80 BN80A4**	285
25.4	194	3.1	54.3	12000	**A352_54.3 S1 M1LA4**	288	**A352_54.3 P80 BN80A4**	289
25.7	192	1.3	53.7	5670	**A202_53.7 S1 M1LA4**	280	**A202_53.7 P80 BN80A4**	281
26.2	189	2.2	52.7	8410	**A302_52.7 S1 M1LA4**	284	**A302_52.7 P80 BN80A4**	285
28.1	176	3.4	49.1	12000	**A352_49.1 S1 M1LA4**	288	**A352_49.1 P80 BN80A4**	289
28.6	173	1.4	48.3	5560	**A202_48.3 S1 M1LA4**	280	**A202_48.3 P80 BN80A4**	281
28.6	173	2.4	48.3	8230	**A302_48.3 S1 M1LA4**	284	**A302_48.3 P80 BN80A4**	285
30	163	0.9	45.4	4910	**A102_45.4 S1 M1LA4**	276	**A102_45.4 P80 BN80A4**	277
32	155	2.6	43.4	8010	**A302_43.4 S1 M1LA4**	284	**A302_43.4 P80 BN80A4**	285
32	155	1.6	43.2	5440	**A202_43.2 S1 M1LA4**	280	**A202_43.2 P80 BN80A4**	281
34	146	1.0	40.9	5500	**A102_40.9 S1 M1LA4**	276	**A102_40.9 P80 BN80A4**	277
35	142	1.8	39.6	5340	**A202_39.6 S1 M1LA4**	280	**A202_39.6 P80 BN80A4**	281
35	141	2.9	39.3	7800	**A302_39.3 S1 M1LA4**	284	**A302_39.3 P80 BN80A4**	285
38	131	3.1	36.6	7660	**A302_36.6 S1 M1LA4**	284	**A302_36.6 P80 BN80A4**	285
39	127	2.0	35.4	5200	**A202_35.4 S1 M1LA4**	280	**A202_35.4 P80 BN80A4**	281
39	126	1.2	35.1	4700	**A102_35.1 S1 M1LA4**	276	**A102_35.1 P80 BN80A4**	277
41	120	3.4	33.4	7480	**A302_33.4 S1 M1LA4**	284	**A302_33.4 P80 BN80A4**	285
43	115	1.3	32.2	5490	**A102_32.2 S1 M1LA4**	276	**A102_32.2 P80 BN80A4**	277
44	112	2.2	31.3	5060	**A202_31.3 S1 M1LA4**	280	**A202_31.3 P80 BN80A4**	281
47	105	2.4	29.2	4970	**A202_29.2 S1 M1LA4**	280	**A202_29.2 P80 BN80A4**	281
48	102	1.0	28.6	2550	**A052_28.6 S1 M1LA4**	273	**A052_28.6 P80 BN80A4**	273
48	102	1.5	28.6	4510	**A102_28.6 S1 M1LA4**	276	**A102_28.6 P80 BN80A4**	277
52	95	2.6	26.5	4850	**A202_26.5 S1 M1LA4**	280	**A202_26.5 P80 BN80A4**	281
54	91	1.1	25.5	2510	**A052_25.5 S1 M1LA4**	273	**A052_25.5 P80 BN80A4**	273
54	91	1.6	25.5	5230	**A102_25.5 S1 M1LA4**	276	**A102_25.5 P80 BN80A4**	277
58	85	1.2	23.8	2490	**A052_23.8 S1 M1LA4**	273	**A052_23.8 P80 BN80A4**	273
58	85	1.8	23.8	4330	**A102_23.8 S1 M1LA4**	276	**A102_23.8 P80 BN80A4**	277
60	83	3.0	23.1	4690	**A202_23.1 S1 M1LA4**	280	**A202_23.1 P80 BN80A4**	281
65	76	1.3	21.4	2450	**A052_21.4 S1 M1LA4**	273	**A052_21.4 P80 BN80A4**	273
65	76	2.0	21.4	5020	**A102_21.4 S1 M1LA4**	276	**A102_21.4 P80 BN80A4**	277
65	76	3.3	21.2	4590	**A202_21.2 S1 M1LA4**	280	**A202_21.2 P80 BN80A4**	281
74	66	1.5	18.6	2400	**A052_18.6 S1 M1LA4**	273	**A052_18.6 P80 BN80A4**	273
74	66	2.3	18.6	4090	**A102_18.6 S1 M1LA4**	276	**A102_18.6 P80 BN80A4**	277
84	59	1.7	16.4	2340	**A052_16.4 S1 M1LA4**	273	**A052_16.4 P80 BN80A4**	273
84	59	2.5	16.4	4710	**A102_16.4 S1 M1LA4**	276	**A102_16.4 P80 BN80A4**	277
99	50	2.0	13.9	2270	**A052_13.9 S1 M1LA4**	273	**A052_13.9 P80 BN80A4**	273
99	50	3.0	13.9	3800	**A102_13.9 S1 M1LA4**	276	**A102_13.9 P80 BN80A4**	277
112	44	2.3	12.3	2220	**A052_12.3 S1 M1LA4**	273	**A052_12.3 P80 BN80A4**	273
112	44	3.2	12.3	3670	**A102_12.3 S1 M1LA4**	276	**A102_12.3 P80 BN80A4**	277
131	38	2.6	10.6	2130	**A052_10.6 S1 M1LA4**	273	**A052_10.6 P80 BN80A4**	273
144	34	2.9	9.6	2100	**A052_9.6 S1 M1LA4**	273	**A052_9.6 P80 BN80A4**	273
162	30	3.3	8.5	2030	**A052_8.5 S1 M1LA4**	273	**A052_8.5 P80 BN80A4**	273
171	29	3.1	16.4	2000	**A052_16.4 S1 M1SD2**	273	**A052_16.4 P71 BN71B2**	273
191	26	3.9	7.2	1950	**A052_7.2 S1 M1LA4**	273	**A052_7.2 P80 BN80A4**	273
218	23	4.4	6.3	1880	**A052_6.3 S1 M1LA4**	273	**A052_6.3 P80 BN80A4**	273
229	22	4.6	12.3	1860	**A052_12.3 S1 M1SD2**	273	**A052_12.3 P71 BN71B2**	273
252	19.6	4.9	5.5	1810	**A052_5.5 S1 M1LA4**	273	**A052_5.5 P80 BN80A4**	273

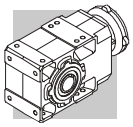

0.55 kW

n_2 min-1	M_2 Nm	S	i	R_{n2} N			IEC	
267	18.5	4.3	10.6	1780	**A052_10.6 S1 M1SD2**	273	**A052_10.6 P71 BN71B2**	273
293	16.8	5.6	9.6	1740	**A052_9.6 S1 M1SD2**	273	**A052_9.6 P71 BN71B2**	273
331	14.9	6.0	8.5	1680	**A052_8.5 S1 M1SD2**	273	**A052_8.5 P71 BN71B2**	273
391	12.6	6.7	7.2	1600	**A052_7.2 S1 M1SD2**	273	**A052_7.2 P71 BN71B2**	273
445	11.1	7.2	6.3	1540	**A052_6.3 S1 M1SD2**	273	**A052_6.3 P71 BN71B2**	273
516	9.6	7.8	5.5	1480	**A052_5.5 S1 M1SD2**	273	**A052_5.5 P71 BN71B2**	273

0.75 kW

n_2 min-1	M_2 Nm	S	i	R_{n2} N			IEC	
0.56	11316	1.2	1632	75000	**A904_1632 S2 M2SB6**	314	**A904_1632 P90 BN90S6**	315
0.61	10446	1.3	1507	75000	**A904_1507 S2 M2SB6**	314	**A904_1507 P90 BN90S6**	315
0.69	9179	1.5	1324	75000	**A904_1324 S2 M2SB6**	314	**A904_1324 P90 BN90S6**	315
0.75	8473	1.7	1222	75000	**A904_1222 S2 M2SB6**	314	**A904_1222 P90 BN90S6**	315
0.86	7436	1.9	1632	75000	**A904_1632 S2 M2SA4**	314	**A904_1632 P80 BN80B4**	315
0.90	7096	1.1	1558	65000	**A804_1558 S2 M2SA4**	311	**A804_1558 P80 BN80B4**	312
0.93	6864	2.0	1507	75000	**A904_1507 S2 M2SA4**	314	**A904_1507 P80 BN80B4**	315
0.97	6550	1.2	1438	65000	**A804_1438 S2 M2SA4**	311	**A804_1438 P80 BN80B4**	312
1.0	6104	1.3	1340	65000	**A804_1340 S2 M2SA4**	311	**A804_1340 P80 BN80B4**	312
1.1	6032	2.3	1324	75000	**A904_1324 S2 M2SA4**	314	**A904_1324 P80 BN80B4**	315
1.1	5660	0.9	1242	50000	**A704_1242 S2 M2SA4**	308	**A704_1242 P80 BN80B4**	309
1.1	5635	1.4	1237	65000	**A804_1237 S2 M2SA4**	311	**A804_1237 P80 BN80B4**	312
1.1	5568	2.5	1222	75000	**A904_1222 S2 M2SA4**	314	**A904_1222 P80 BN80B4**	315
1.2	5291	0.9	1161	50000	**A704_1161 S2 M2SA4**	308	**A704_1161 P80 BN80B4**	309
1.3	5060	2.8	1111	75000	**A904_1111 S2 M2SA4**	314	**A904_1111 P80 BN80B4**	315
1.3	4942	1.6	1085	65000	**A804_1085 S2 M2SA4**	311	**A804_1085 P80 BN80B4**	312
1.3	4884	1.0	1072	50000	**A704_1072 S2 M2SA4**	308	**A704_1072 P80 BN80B4**	309
1.4	4670	3.0	1025	75000	**A904_1025 S2 M2SA4**	314	**A904_1025 P80 BN80B4**	315
1.4	4562	1.8	1001	65000	**A804_1001 S2 M2SA4**	311	**A804_1001 P80 BN80B4**	312
1.5	4270	3.3	937.2	75000	**A904_937.2 S2 M2SA4**	314	**A904_937.2 P80 BN80B4**	315
1.5	4221	1.2	926.5	50000	**A704_926.5 S2 M2SA4**	308	**A704_926.5 P80 BN80B4**	309
1.6	4094	2.0	898.7	65000	**A804_898.7 S2 M2SA4**	311	**A804_898.7 P80 BN80B4**	312
1.6	3896	1.3	855.3	50000	**A704_855.3 S2 M2SA4**	308	**A704_855.3 P80 BN80B4**	309
1.7	3779	2.1	829.5	65000	**A804_829.5 S2 M2SA4**	311	**A804_829.5 P80 BN80B4**	312
1.8	3480	1.4	763.9	50000	**A704_763.9 S2 M2SA4**	308	**A704_763.9 P80 BN80B4**	309
1.8	3472	2.3	762.1	65000	**A804_762.1 S2 M2SA4**	311	**A804_762.1 P80 BN80B4**	312
2.0	3212	1.6	705.1	50000	**A704_705.1 S2 M2SA4**	308	**A704_705.1 P80 BN80B4**	309
2.0	3205	2.5	703.5	65000	**A804_703.5 S2 M2SA4**	311	**A804_703.5 P80 BN80B4**	312
2.0	3177	0.9	697.3	30000	**A604_697.3 S2 M2SA4**	304	**A604_697.3 P80 BN80B4**	305
2.2	2937	1.7	644.6	50000	**A704_644.6 S2 M2SA4**	308	**A704_644.6 P80 BN80B4**	309
2.2	2891	1.0	634.6	30000	**A604_634.6 S2 M2SA4**	304	**A604_634.6 P80 BN80B4**	305
2.3	2766	2.9	607.2	65000	**A804_607.2 S2 M2SA4**	311	**A804_607.2 P80 BN80B4**	312
2.4	2711	1.8	595.0	50000	**A704_595.0 S2 M2SA4**	308	**A704_595.0 P80 BN80B4**	309
2.4	2669	1.0	585.8	30000	**A604_585.8 S2 M2SA4**	304	**A604_585.8 P80 BN80B4**	305
2.5	2553	3.1	560.5	65000	**A804_560.5 S2 M2SA4**	311	**A804_560.5 P80 BN80B4**	312
2.6	2469	1.1	542.0	30000	**A604_542.0 S2 M2SA4**	304	**A604_542.0 P80 BN80B4**	305
2.7	2348	2.1	515.4	50000	**A704_515.4 S2 M2SA4**	308	**A704_515.4 P80 BN80B4**	309
2.8	2279	1.2	500.3	30000	**A604_500.3 S2 M2SA4**	304	**A604_500.3 P80 BN80B4**	305

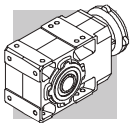

0.75 kW

n_2 min-1	M_2 Nm	S	i	R_{n2} N			IEC	
2.9	2167	2.3	475.8	50000	**A704_475.8 S2 M2SA4**	308	**A704_475.8 P80 BN80B4**	309
3.2	1997	1.4	438.4	30000	**A604_438.4 S2 M2SA4**	304	**A604_438.4 P80 BN80B4**	305
3.5	1844	1.5	404.7	30000	**A604_404.7 S2 M2SA4**	304	**A604_404.7 P80 BN80B4**	305
3.5	1823	2.7	400.2	50000	**A704_400.2 S2 M2SA4**	308	**A704_400.2 P80 BN80B4**	309
3.8	1683	3.0	369.4	50000	**A704_369.4 S2 M2SA4**	308	**A704_369.4 P80 BN80B4**	309
3.8	1666	0.9	365.6	20000	**A504_365.6 S2 M2SA4**	296	**A504_365.6 P80 BN80B4**	297
4.0	1600	1.8	351.2	30000	**A604_351.2 S2 M2SA4**	304	**A604_351.2 P80 BN80B4**	305
4.2	1515	1.0	332.6	20000	**A504_332.6 S2 M2SA4**	296	**A504_332.6 P80 BN80B4**	297
4.3	1477	1.9	324.2	30000	**A604_324.2 S2 M2SA4**	304	**A604_324.2 P80 BN80B4**	305
4.4	1441	3.5	316.4	50000	**A704_316.4 S2 M2SA4**	308	**A704_316.4 P80 BN80B4**	309
4.9	1307	1.1	286.8	20000	**A504_286.8 S2 M2SA4**	296	**A504_286.8 P80 BN80B4**	297
4.9	1304	2.1	286.3	30000	**A604_286.3 S2 M2SA4**	304	**A604_286.3 P80 BN80B4**	305
5.3	1204	2.3	264.3	30000	**A604_264.3 S2 M2SA4**	304	**A604_264.3 P80 BN80B4**	305
5.4	1189	1.3	260.9	20000	**A504_260.9 S2 M2SA4**	296	**A504_260.9 P80 BN80B4**	297
6.0	1057	1.4	232.0	20000	**A504_232.0 S2 M2SA4**	296	**A504_232.0 P80 BN80B4**	297
6.2	1030	2.7	226.1	30000	**A604_226.1 S2 M2SA4**	304	**A604_226.1 P80 BN80B4**	305
6.6	961	1.6	211.0	20000	**A504_211.0 S2 M2SA4**	296	**A504_211.0 P80 BN80B4**	297
6.7	951	2.9	208.7	30000	**A604_208.7 S2 M2SA4**	304	**A604_208.7 P80 BN80B4**	305
7.1	920	0.9	197.5	15000	**A413_197.5 S2 M2SA4**	292	**A413_197.5 P80 BN80B4**	293
7.2	905	2.2	194.2	30000	**A553_194.2 S2 M2SA4**	300	**A553_194.2 P80 BN80B4**	301
7.3	888	1.7	190.6	20000	**A503_190.6 S2 M2SA4**	296	**A503_190.6 P80 BN80B4**	297
7.5	865	3.2	185.8	30000	**A603_185.8 S2 M2SA4**	304	**A603_185.8 P80 BN80B4**	305
7.6	859	1.0	184.4	15000	**A413_184.4 S2 M2SA4**	292	**A413_184.4 P80 BN80B4**	293
8.0	815	2.5	175.0	30000	**A553_175.0 S2 M2SA4**	300	**A553_175.0 P80 BN80B4**	301
8.1	808	1.9	173.4	20000	**A503_173.4 S2 M2SA4**	296	**A503_173.4 P80 BN80B4**	297
8.2	799	3.5	171.5	30000	**A603_171.5 S2 M2SA4**	304	**A603_171.5 P80 BN80B4**	305
8.7	747	2.7	160.4	30000	**A553_160.4 S2 M2SA4**	300	**A553_160.4 P80 BN80B4**	301
9.1	720	2.1	154.6	20000	**A503_154.6 S2 M2SA4**	296	**A503_154.6 P80 BN80B4**	297
9.5	684	1.2	146.9	15000	**A413_146.9 S2 M2SA4**	292	**A413_146.9 P80 BN80B4**	293
9.5	684	2.9	146.8	30000	**A553_146.8 S2 M2SA4**	300	**A553_146.8 P80 BN80B4**	301
10.0	655	2.3	140.6	20000	**A503_140.6 S2 M2SA4**	296	**A503_140.6 P80 BN80B4**	297
10.3	635	0.9	136.3	12000	**A353_136.3 S2 M2SA4**	288	**A353_136.3 P80 BN80B4**	289
10.5	618	3.2	132.7	30000	**A553_132.7 S2 M2SA4**	300	**A553_132.7 P80 BN80B4**	301
10.8	604	2.5	129.7	20000	**A503_129.7 S2 M2SA4**	296	**A503_129.7 P80 BN80B4**	297
11.3	577	3.5	123.9	30000	**A553_123.9 S2 M2SA4**	300	**A553_123.9 P80 BN80B4**	301
11.9	549	2.7	118.0	20000	**A503_118.0 S2 M2SA4**	296	**A503_118.0 P80 BN80B4**	297
12.0	545	1.0	116.9	12000	**A353_116.9 S2 M2SA4**	288	**A353_116.9 P80 BN80B4**	289
12.1	540	1.6	115.9	15000	**A413_115.9 S2 M2SA4**	292	**A413_115.9 P80 BN80B4**	293
12.8	510	2.9	109.4	20000	**A503_109.4 S2 M2SA4**	296	**A503_109.4 P80 BN80B4**	297
13.3	492	1.1	105.5	12000	**A353_105.5 S2 M2SA4**	288	**A353_105.5 P80 BN80B4**	289
14.1	464	3.2	99.5	20000	**A503_99.5 S2 M2SA4**	296	**A503_99.5 P80 BN80B4**	297
14.6	460	1.2	95.6	12000	**A352_95.6 S2 M2SA4**	288	**A352_95.6 P80 BN80B4**	289
15.1	432	1.9	92.8	15000	**A413_92.8 S2 M2SA4**	292	**A413_92.8 P80 BN80B4**	293
17.0	397	1.5	82.5	12000	**A352_82.5 S2 M2SA4**	288	**A352_82.5 P80 BN80B4**	289
17.7	381	2.2	79.2	15000	**A412_79.2 S2 M2SA4**	292	**A412_79.2 P80 BN80B4**	293
18.3	368	1.0	76.5	8580	**A302_76.5 S2 M2SA4**	284	**A302_76.5 P80 BN80B4**	285
18.8	357	1.7	74.3	12000	**A352_74.3 S2 M2SA4**	288	**A352_74.3 P80 BN80B4**	289
19.6	343	2.5	71.3	15000	**A412_71.3 S2 M2SA4**	292	**A412_71.3 P80 BN80B4**	293
21.2	318	1.2	66.0	8360	**A302_66.0 S2 M2SA4**	284	**A302_66.0 P80 BN80B4**	285
21.3	317	1.9	65.8	12000	**A352_65.8 S2 M2SA4**	288	**A352_65.8 P80 BN80B4**	289
21.8	309	2.8	64.2	15000	**A412_64.2 S2 M2SA4**	292	**A412_64.2 P80 BN80B4**	293

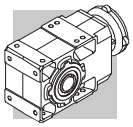

0.75 kW

n_2 min-1	M_2 Nm	S	i	R_{n2} N			IEC	
23.2	290	2.1	60.4	12000	**A352_60.4 S2 M2SA4**	288	**A352_60.4 P80 BN80B4**	289
23.6	286	1.4	59.4	8190	**A302_59.4 S2 M2SA4**	284	**A302_59.4 P80 BN80B4**	285
23.8	283	3.0	58.8	15000	**A412_58.8 S2 M2SA4**	292	**A412_58.8 P80 BN80B4**	293
25.8	261	2.3	54.3	12000	**A352_54.3 S2 M2SA4**	288	**A352_54.3 P80 BN80B4**	289
26.1	258	1.0	53.7	5210	**A202_53.7 S2 M2SA4**	280	**A202_53.7 P80 BN80B4**	281
26.3	256	3.3	53.1	15000	**A412_53.1 S2 M2SA4**	292	**A412_53.1 P80 BN80B4**	293
26.6	253	1.6	52.7	7990	**A302_52.7 S2 M2SA4**	284	**A302_52.7 P80 BN80B4**	285
28.5	236	2.5	49.1	12000	**A352_49.1 S2 M2SA4**	288	**A352_49.1 P80 BN80B4**	289
29.0	232	1.1	48.3	5140	**A202_48.3 S2 M2SA4**	280	**A202_48.3 P80 BN80B4**	281
29.0	232	1.8	48.3	7840	**A302_48.3 S2 M2SA4**	284	**A302_48.3 P80 BN80B4**	285
31	220	2.7	45.8	12000	**A352_45.8 S2 M2SA4**	288	**A352_45.8 P80 BN80B4**	289
32	209	2.0	43.4	7660	**A302_43.4 S2 M2SA4**	284	**A302_43.4 P80 BN80B4**	285
32	208	1.2	43.2	5060	**A202_43.2 S2 M2SA4**	280	**A202_43.2 P80 BN80B4**	281
34	201	3.0	41.8	11900	**A352_41.8 S2 M2SA4**	288	**A352_41.8 P80 BN80B4**	289
35	191	1.3	39.6	4990	**A202_39.6 S2 M2SA4**	280	**A202_39.6 P80 BN80B4**	281
36	189	2.2	39.3	7480	**A302_39.3 S2 M2SA4**	284	**A302_39.3 P80 BN80B4**	285
38	176	2.3	36.6	7360	**A302_36.6 S2 M2SA4**	284	**A302_36.6 P80 BN80B4**	285
38	176	3.4	36.6	11500	**A352_36.6 S2 M2SA4**	288	**A352_36.6 P80 BN80B4**	289
40	170	1.5	35.4	4890	**A202_35.4 S2 M2SA4**	280	**A202_35.4 P80 BN80B4**	281
40	169	0.9	35.1	4320	**A102_35.1 S2 M2SA4**	276	**A102_35.1 P80 BN80B4**	277
42	161	2.5	33.4	7200	**A302_33.4 S2 M2SA4**	284	**A302_33.4 P80 BN80B4**	285
43	155	1.0	32.2	5080	**A102_32.2 S2 M2SA4**	276	**A102_32.2 P80 BN80B4**	277
45	151	1.7	31.3	4780	**A202_31.3 S2 M2SA4**	280	**A202_31.3 P80 BN80B4**	281
48	141	2.9	29.3	6960	**A302_29.3 S2 M2SA4**	284	**A302_29.3 P80 BN80B4**	285
48	141	1.8	29.2	4710	**A202_29.2 S2 M2SA4**	280	**A202_29.2 P80 BN80B4**	281
49	137	1.1	28.6	4200	**A102_28.6 S2 M2SA4**	276	**A102_28.6 P80 BN80B4**	277
53	128	3.2	26.5	6790	**A302_26.5 S2 M2SA4**	284	**A302_26.5 P80 BN80B4**	285
53	127	2.0	26.5	4620	**A202_26.5 S2 M2SA4**	280	**A202_26.5 P80 BN80B4**	281
55	123	1.2	25.5	4900	**A102_25.5 S2 M2SA4**	276	**A102_25.5 P80 BN80B4**	277
59	114	1.3	23.8	4070	**A102_23.8 S2 M2SA4**	276	**A102_23.8 P80 BN80B4**	277
61	111	2.2	23.1	4480	**A202_23.1 S2 M2SA4**	280	**A202_23.1 P80 BN80B4**	281
66	103	1.0	21.4	2210	**A052_21.4 S2 M2SA4**	273	**A052_21.4 P80 BN80B4**	273
66	103	1.5	21.4	4740	**A102_21.4 S2 M2SA4**	276	**A102_21.4 P80 BN80B4**	277
66	102	2.4	21.2	4390	**A202_21.2 S2 M2SA4**	280	**A202_21.2 P80 BN80B4**	281
75	89	1.1	18.6	2190	**A052_18.6 S2 M2SA4**	273	**A052_18.6 P80 BN80B4**	273
75	89	1.7	18.6	3880	**A102_18.6 S2 M2SA4**	276	**A102_18.6 P80 BN80B4**	277
77	87	2.9	18.1	4230	**A202_18.1 S2 M2SA4**	280	**A202_18.1 P80 BN80B4**	281
85	79	1.3	16.4	2160	**A052_16.4 S2 M2SA4**	273	**A052_16.4 P80 BN80B4**	273
85	79	1.9	16.4	4490	**A102_16.4 S2 M2SA4**	276	**A102_16.4 P80 BN80B4**	277
87	78	3.2	16.2	4110	**A202_16.2 S2 M2SA4**	280	**A202_16.2 P80 BN80B4**	281
101	67	1.5	13.9	2110	**A052_13.9 S2 M2SA4**	273	**A052_13.9 P80 BN80B4**	273
101	67	2.2	13.9	3640	**A102_13.9 S2 M2SA4**	276	**A102_13.9 P80 BN80B4**	277
114	59	1.7	12.3	2080	**A052_12.3 S2 M2SA4**	273	**A052_12.3 P80 BN80B4**	273
114	59	2.4	12.3	3530	**A102_12.3 S2 M2SA4**	276	**A102_12.3 P80 BN80B4**	277
133	51	2.0	10.6	2010	**A052_10.6 S2 M2SA4**	273	**A052_10.6 P80 BN80B4**	273
133	51	3.0	10.6	3400	**A102_10.6 S2 M2SA4**	276	**A102_10.6 P80 BN80B4**	277
146	46	2.2	9.6	1990	**A052_9.6 S2 M2SA4**	273	**A052_9.6 P80 BN80B4**	273
146	46	3.0	9.6	3320	**A102_9.6 S2 M2SA4**	276	**A102_9.6 P80 BN80B4**	277
164	41	2.4	8.5	1940	**A052_8.5 S2 M2SA4**	273	**A052_8.5 P80 BN80B4**	273
164	41	3.4	8.5	3820	**A102_8.5 S2 M2SA4**	276	**A102_8.5 P80 BN80B4**	277
194	35	2.9	7.2	1870	**A052_7.2 S2 M2SA4**	273	**A052_7.2 P80 BN80B4**	273

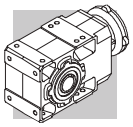

0.75 kW

n_2 min-1	M_2 Nm	S	i	R_{n2} N			IEC	
221	30	3.3	6.3	1810	**A052_6.3 S2 M2SA4**	273	**A052_6.3 P80 BN80B4**	273
256	26	3.6	5.5	1750	**A052_5.5 S2 M2SA4**	273	**A052_5.5 P80 BN80B4**	273
266	25	3.2	10.6	1720	**A052_10.6 S1 M1LA2**	273	**A052_10.6 P80 BN80A2**	273
292	23	4.1	9.6	1690	**A052_9.6 S1 M1LA2**	273	**A052_9.6 P80 BN80A2**	273
330	20	4.4	8.5	1640	**A052_8.5 S1 M1LA2**	273	**A052_8.5 P80 BN80A2**	273
390	17.3	4.9	7.2	1570	**A052_7.2 S1 M1LA2**	273	**A052_7.2 P80 BN80A2**	273
444	15.2	5.3	6.3	1510	**A052_6.3 S1 M1LA2**	273	**A052_6.3 P80 BN80A2**	273
514	13.1	5.7	5.5	1450	**A052_5.5 S1 M1LA2**	273	**A052_5.5 P80 BN80A2**	273

1.1 kW

n_2 min-1	M_2 Nm	S	i	R_{n2} N			IEC	
0.61	15320	0.9	1507	75000	**A904_1507 S3 M3SA6**	314	**A904_1507 P90 BN90L6**	315
0.69	13462	1.0	1324	75000	**A904_1324 S3 M3SA6**	314	**A904_1324 P90 BN90L6**	315
0.75	12427	1.1	1222	75000	**A904_1222 S3 M3SA6**	314	**A904_1222 P90 BN90L6**	315
0.86	10907	1.3	1632	75000	**A904_1632 S2 M2SB4**	314	**A904_1632 P90 BN90S4**	315
0.93	10068	1.4	1507	75000	**A904_1507 S2 M2SB4**	314	**A904_1507 P90 BN90S4**	315
1.0	8953	0.9	1340	65000	**A804_1340 S2 M2SB4**	311	**A804_1340 P90 BN90S4**	312
1.1	8847	1.6	1324	75000	**A904_1324 S2 M2SB4**	314	**A904_1324 P90 BN90S4**	315
1.1	8264	1.0	1237	65000	**A804_1237 S2 M2SB4**	311	**A804_1237 P90 BN90S4**	312
1.1	8166	1.7	1222	75000	**A904_1222 S2 M2SB4**	314	**A904_1222 P90 BN90S4**	315
1.3	7421	1.9	1111	75000	**A904_1111 S2 M2SB4**	314	**A904_1111 P90 BN90S4**	315
1.3	7249	1.1	1085	65000	**A804_1085 S2 M2SB4**	311	**A804_1085 P90 BN90S4**	312
1.4	6850	2.0	1025	75000	**A904_1025 S2 M2SB4**	314	**A904_1025 P90 BN90S4**	315
1.4	6691	1.2	1001	65000	**A804_1001 S2 M2SB4**	311	**A804_1001 P90 BN90S4**	312
1.5	6262	2.2	937.2	75000	**A904_937.2 S2 M2SB4**	314	**A904_937.2 P90 BN90S4**	315
1.6	6005	1.3	898.7	65000	**A804_898.7 S2 M2SB4**	311	**A804_898.7 P90 BN90S4**	312
1.6	5780	2.4	865.1	75000	**A904_865.1 S2 M2SB4**	314	**A904_865.1 P90 BN90S4**	315
1.6	5715	0.9	855.3	50000	**A704_855.3 S2 M2SB4**	308	**A704_855.3 P90 BN90S4**	309
1.7	5543	1.4	829.5	65000	**A804_829.5 S2 M2SB4**	311	**A804_829.5 P90 BN90S4**	312
1.8	5124	2.7	766.9	75000	**A904_766.9 S2 M2SB4**	314	**A904_766.9 P90 BN90S4**	315
1.8	5104	1.0	763.9	50000	**A704_763.9 S2 M2SB4**	308	**A704_763.9 P90 BN90S4**	309
1.8	5092	1.6	762.1	65000	**A804_762.1 S2 M2SB4**	311	**A804_762.1 P90 BN90S4**	312
2.0	4730	3.0	707.9	75000	**A904_707.9 S2 M2SB4**	314	**A904_707.9 P90 BN90S4**	315
2.0	4711	1.1	705.1	50000	**A704_705.1 S2 M2SB4**	308	**A704_705.1 P90 BN90S4**	309
2.0	4700	1.7	703.5	65000	**A804_703.5 S2 M2SB4**	311	**A804_703.5 P90 BN90S4**	312
2.2	4307	1.2	644.6	50000	**A704_644.6 S2 M2SB4**	308	**A704_644.6 P90 BN90S4**	309
2.3	4057	2.0	607.2	65000	**A804_607.2 S2 M2SB4**	311	**A804_607.2 P90 BN90S4**	312
2.3	4019	3.5	601.6	75000	**A904_601.6 S2 M2SB4**	314	**A904_601.6 P90 BN90S4**	315
2.4	3976	1.3	595.0	50000	**A704_595.0 S2 M2SB4**	308	**A704_595.0 P90 BN90S4**	309
2.5	3745	2.1	560.5	65000	**A804_560.5 S2 M2SB4**	311	**A804_560.5 P90 BN90S4**	312
2.7	3444	1.5	515.4	50000	**A704_515.4 S2 M2SB4**	308	**A704_515.4 P90 BN90S4**	309
2.9	3200	2.5	478.9	65000	**A804_478.9 S2 M2SB4**	311	**A804_478.9 P90 BN90S4**	312
2.9	3179	1.6	475.8	50000	**A704_475.8 S2 M2SB4**	308	**A704_475.8 P90 BN90S4**	309
3.2	2954	2.7	442.1	65000	**A804_442.1 S2 M2SB4**	311	**A804_442.1 P90 BN90S4**	312
3.2	2929	1.0	438.4	30000	**A604_438.4 S2 M2SB4**	304	**A604_438.4 P90 BN90S4**	305
3.5	2704	1.0	404.7	30000	**A604_404.7 S2 M2SB4**	304	**A604_404.7 P90 BN90S4**	305
3.5	2674	1.9	400.2	50000	**A704_400.2 S2 M2SB4**	308	**A704_400.2 P90 BN90S4**	309

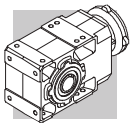

1.1 kW

n_2 min-1	M_2 Nm	S	i	R_{n2} N			IEC	
3.7	2562	3.1	383.5	65000	**A804_383.5 S2 M2SB4**	311	**A804_383.5 P90 BN90S4**	312
3.8	2468	2.0	369.4	50000	**A704_369.4 S2 M2SB4**	308	**A704_369.4 P90 BN90S4**	309
4.0	2365	3.4	354.0	65000	**A804_354.0 S2 M2SB4**	311	**A804_354.0 P90 BN90S4**	312
4.0	2347	1.2	351.2	30000	**A604_351.2 S2 M2SB4**	304	**A604_351.2 P90 BN90S4**	305
4.3	2166	1.3	324.2	30000	**A604_324.2 S2 M2SB4**	304	**A604_324.2 P90 BN90S4**	305
4.4	2114	2.4	316.4	50000	**A704_316.4 S2 M2SB4**	308	**A704_316.4 P90 BN90S4**	309
4.8	1951	2.6	292.0	50000	**A704_292.0 S2 M2SB4**	308	**A704_292.0 P90 BN90S4**	309
4.9	1913	1.5	286.3	30000	**A604_286.3 S2 M2SB4**	304	**A604_286.3 P90 BN90S4**	305
5.3	1766	1.6	264.3	30000	**A604_264.3 S2 M2SB4**	304	**A604_264.3 P90 BN90S4**	305
5.4	1743	0.9	260.9	20000	**A504_260.9 S2 M2SB4**	296	**A504_260.9 P90 BN90S4**	297
5.9	1594	3.1	238.6	50000	**A704_238.6 S2 M2SB4**	308	**A704_238.6 P90 BN90S4**	309
6.0	1550	1.0	232.0	20000	**A504_232.0 S2 M2SB4**	296	**A504_232.0 P90 BN90S4**	297
6.2	1511	1.9	226.1	30000	**A604_226.1 S2 M2SB4**	304	**A604_226.1 P90 BN90S4**	305
6.4	1472	3.4	220.3	50000	**A704_220.3 S2 M2SB4**	308	**A704_220.3 P90 BN90S4**	309
6.6	1410	1.1	211.0	20000	**A504_211.0 S2 M2SB4**	296	**A504_211.0 P90 BN90S4**	297
6.7	1395	2.0	208.7	30000	**A604_208.7 S2 M2SB4**	304	**A604_208.7 P90 BN90S4**	305
7.2	1327	1.5	194.2	30000	**A553_194.2 S2 M2SB4**	300	**A553_194.2 P90 BN90S4**	301
7.3	1302	1.2	190.6	20000	**A503_190.6 S2 M2SB4**	296	**A503_190.6 P90 BN90S4**	297
7.5	1269	2.2	185.8	30000	**A603_185.8 S2 M2SB4**	304	**A603_185.8 P90 BN90S4**	305
8.0	1196	1.7	175.0	30000	**A553_175.0 S2 M2SB4**	300	**A553_175.0 P90 BN90S4**	301
8.1	1184	1.3	173.4	20000	**A503_173.4 S2 M2SB4**	296	**A503_173.4 P90 BN90S4**	297
8.2	1171	2.4	171.5	30000	**A603_171.5 S2 M2SB4**	304	**A603_171.5 P90 BN90S4**	305
8.7	1096	1.8	160.4	30000	**A553_160.4 S2 M2SB4**	300	**A553_160.4 P90 BN90S4**	301
9.0	1066	2.6	156.0	30000	**A603_156.0 S2 M2SB4**	304	**A603_156.0 P90 BN90S4**	305
9.1	1056	1.4	154.6	20000	**A503_154.6 S2 M2SB4**	296	**A503_154.6 P90 BN90S4**	297
9.5	1003	2.0	146.8	30000	**A553_146.8 S2 M2SB4**	300	**A553_146.8 P90 BN90S4**	301
9.7	984	2.8	144.0	30000	**A603_144.0 S2 M2SB4**	304	**A603_144.0 P90 BN90S4**	305
10.0	961	1.6	140.6	20000	**A503_140.6 S2 M2SB4**	296	**A503_140.6 P90 BN90S4**	297
10.5	911	3.1	133.3	30000	**A603_133.3 S2 M2SB4**	304	**A603_133.3 P90 BN90S4**	305
10.5	907	2.2	132.7	30000	**A553_132.7 S2 M2SB4**	300	**A553_132.7 P90 BN90S4**	301
10.8	886	1.7	129.7	20000	**A503_129.7 S2 M2SB4**	296	**A503_129.7 P90 BN90S4**	297
11.3	846	2.4	123.9	30000	**A553_123.9 S2 M2SB4**	300	**A553_123.9 P90 BN90S4**	301
11.4	841	3.3	123.0	30000	**A603_123.0 S2 M2SB4**	304	**A603_123.0 P90 BN90S4**	305
11.9	806	1.9	118.0	20000	**A503_118.0 S2 M2SB4**	296	**A503_118.0 P90 BN90S4**	297
12.1	792	1.1	115.9	15000	**A413_115.9 S2 M2SB4**	292	**A413_115.9 P90 BN90S4**	293
12.8	748	2.0	109.4	20000	**A503_109.4 S2 M2SB4**	296	**A503_109.4 P90 BN90S4**	297
13.8	693	2.9	101.4	30000	**A553_101.4 S2 M2SB4**	300	**A553_101.4 P90 BN90S4**	301
14.1	680	2.2	99.5	20000	**A503_99.5 S2 M2SB4**	296	**A503_99.5 P90 BN90S4**	297
15.1	634	1.3	92.8	15000	**A413_92.8 S2 M2SB4**	292	**A413_92.8 P90 BN90S4**	293
15.6	612	2.5	89.5	20000	**A503_89.5 S2 M2SB4**	296	**A503_89.5 P90 BN90S4**	297
17.0	582	1.0	82.5	12000	**A352_82.5 S2 M2SB4**	288	**A352_82.5 P90 BN90S4**	289
17.2	556	2.7	81.5	20000	**A503_81.5 S2 M2SB4**	296	**A503_81.5 P90 BN90S4**	297
17.7	559	1.5	79.2	15000	**A412_79.2 S2 M2SB4**	292	**A412_79.2 P90 BN90S4**	293
18.8	524	1.1	74.3	12000	**A352_74.3 S2 M2SB4**	288	**A352_74.3 P90 BN90S4**	289
19.6	503	1.7	71.3	15000	**A412_71.3 S2 M2SB4**	292	**A412_71.3 P90 BN90S4**	293
19.9	480	3.1	70.2	20000	**A503_70.2 S2 M2SB4**	296	**A503_70.2 P90 BN90S4**	297
21.3	465	1.3	65.8	12000	**A352_65.8 S2 M2SB4**	288	**A352_65.8 P90 BN90S4**	289
21.8	453	1.9	64.2	15000	**A412_64.2 S2 M2SB4**	292	**A412_64.2 P90 BN90S4**	293
21.9	436	3.4	63.9	20000	**A503_63.9 S2 M2SB4**	296	**A503_63.9 P90 BN90S4**	297
23.2	426	1.4	60.4	12000	**A352_60.4 S2 M2SB4**	288	**A352_60.4 P90 BN90S4**	289
23.6	419	1.0	59.4	7420	**A302_59.4 S2 M2SB4**	284	**A302_59.4 P90 BN90S4**	285

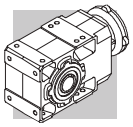

1.1 kW

n_2 min-1	M_2 Nm	S	i	R_{n2} N			IEC	
23.8	415	2.0	58.8	15000	**A412_58.8 S2 M2SB4**	292	**A412_58.8 P90 BN90S4**	293
25.8	383	1.6	54.3	12000	**A352_54.3 S2 M2SB4**	288	**A352_54.3 P90 BN90S4**	289
26.3	375	2.3	53.1	15000	**A412_53.1 S2 M2SB4**	292	**A412_53.1 P90 BN90S4**	293
26.6	372	1.1	52.7	7310	**A302_52.7 S2 M2SB4**	284	**A302_52.7 P90 BN90S4**	285
28.5	346	1.7	49.1	11800	**A352_49.1 S2 M2SB4**	288	**A352_49.1 P90 BN90S4**	289
29.0	341	1.2	48.3	7220	**A302_48.3 S2 M2SB4**	284	**A302_48.3 P90 BN90S4**	285
29.0	341	2.5	48.3	15000	**A412_48.3 S2 M2SB4**	292	**A412_48.3 P90 BN90S4**	293
31	323	1.9	45.8	11700	**A352_45.8 S2 M2SB4**	288	**A352_45.8 P90 BN90S4**	289
31	318	2.6	45.1	15000	**A412_45.1 S2 M2SB4**	292	**A412_45.1 P90 BN90S4**	293
32	306	1.3	43.4	7100	**A302_43.4 S2 M2SB4**	284	**A302_43.4 P90 BN90S4**	285
34	295	2.0	41.8	11400	**A352_41.8 S2 M2SB4**	288	**A352_41.8 P90 BN90S4**	289
36	277	1.5	39.3	6970	**A302_39.3 S2 M2SB4**	284	**A302_39.3 P90 BN90S4**	285
38	259	1.6	36.6	6880	**A302_36.6 S2 M2SB4**	284	**A302_36.6 P90 BN90S4**	285
38	258	2.3	36.6	11100	**A352_36.6 S2 M2SB4**	288	**A352_36.6 P90 BN90S4**	289
39	253	3.1	35.9	14300	**A412_35.9 S2 M2SB4**	292	**A412_35.9 P90 BN90S4**	293
40	250	1.0	35.4	4380	**A202_35.4 S2 M2SB4**	280	**A202_35.4 P90 BN90S4**	281
42	236	1.7	33.4	6760	**A302_33.4 S2 M2SB4**	284	**A302_33.4 P90 BN90S4**	285
42	234	2.6	33.2	10800	**A352_33.2 S2 M2SB4**	288	**A352_33.2 P90 BN90S4**	289
45	221	1.1	31.3	4320	**A202_31.3 S2 M2SB4**	280	**A202_31.3 P90 BN90S4**	281
48	207	2.0	29.3	6580	**A302_29.3 S2 M2SB4**	284	**A302_29.3 P90 BN90S4**	285
48	206	1.2	29.2	4290	**A202_29.2 S2 M2SB4**	280	**A202_29.2 P90 BN90S4**	281
49	201	3.0	28.4	10400	**A352_28.4 S2 M2SB4**	288	**A352_28.4 P90 BN90S4**	289
53	187	2.2	26.5	6440	**A302_26.5 S2 M2SB4**	284	**A302_26.5 P90 BN90S4**	285
53	187	1.3	26.5	4230	**A202_26.5 S2 M2SB4**	280	**A202_26.5 P90 BN90S4**	281
55	181	3.3	25.7	10100	**A352_25.7 S2 M2SB4**	288	**A352_25.7 P90 BN90S4**	289
59	168	0.9	23.8	3640	**A102_23.8 S2 M2SB4**	276	**A102_23.8 P90 BN90S4**	277
61	163	1.5	23.1	4140	**A202_23.1 S2 M2SB4**	280	**A202_23.1 P90 BN90S4**	281
62	161	2.6	22.8	6220	**A302_22.8 S2 M2SB4**	284	**A302_22.8 P90 BN90S4**	285
66	151	1.0	21.4	4280	**A102_21.4 S2 M2SB4**	276	**A102_21.4 P90 BN90S4**	277
66	150	1.7	21.2	4080	**A202_21.2 S2 M2SB4**	280	**A202_21.2 P90 BN90S4**	281
68	145	2.8	20.5	6070	**A302_20.5 S2 M2SB4**	284	**A302_20.5 P90 BN90S4**	285
75	131	1.1	18.6	3540	**A102_18.6 S2 M2SB4**	276	**A102_18.6 P90 BN90S4**	277
77	128	2.0	18.1	3970	**A202_18.1 S2 M2SB4**	280	**A202_18.1 P90 BN90S4**	281
78	127	3.2	18.0	5880	**A302_18.0 S2 M2SB4**	284	**A302_18.0 P90 BN90S4**	285
85	116	1.3	16.4	4130	**A102_16.4 S2 M2SB4**	276	**A102_16.4 P90 BN90S4**	277
86	115	3.3	16.3	5740	**A302_16.3 S2 M2SB4**	284	**A302_16.3 P90 BN90S4**	285
87	114	2.2	16.2	3880	**A202_16.2 S2 M2SB4**	280	**A202_16.2 P90 BN90S4**	281
99	99	2.5	14.1	3770	**A202_14.1 S2 M2SB4**	280	**A202_14.1 P90 BN90S4**	281
101	98	1.0	13.9	1840	**A052_13.9 S2 M2SB4**	273		
101	98	1.5	13.9	3380	**A102_13.9 S2 M2SB4**	276	**A102_13.9 P90 BN90S4**	277
114	87	1.2	12.3	1850	**A052_12.3 S2 M2SB4**	273		
114	87	1.6	12.3	3300	**A102_12.3 S2 M2SB4**	276	**A102_12.3 P90 BN90S4**	277
117	84	2.5	12.0	3620	**A202_12.0 S2 M2SB4**	280	**A202_12.0 P90 BN90S4**	281
133	75	1.3	10.6	1810	**A052_10.6 S2 M2SB4**	273		
133	75	2.0	10.6	3210	**A102_10.6 S2 M2SB4**	276	**A102_10.6 P90 BN90S4**	277
135	73	3.1	10.3	3510	**A202_10.3 S2 M2SB4**	280	**A202_10.3 P90 BN90S4**	281
146	68	1.5	9.6	1810	**A052_9.6 S2 M2SB4**	273		
146	68	2.1	9.6	3140	**A102_9.6 S2 M2SB4**	276	**A102_9.6 P90 BN90S4**	277
149	66	3.2	9.4	3420	**A202_9.4 S2 M2SB4**	280	**A202_9.4 P90 BN90S4**	281
164	60	1.7	8.5	1780	**A052_8.5 S2 M2SB4**	273		
164	60	2.3	8.5	3630	**A102_8.5 S2 M2SB4**	276	**A102_8.5 P90 BN90S4**	277

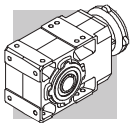

1.1 kW

n_2 min-1	M_2 Nm	S	i	R_{n2} N			IEC	
194	51	2.0	7.2	1730	**A052_7.2 S2 M2SB4**	273		
194	51	2.8	7.2	2940	**A102_7.2 S2 M2SB4**	276	**A102_7.2 P90 BN90S4**	277
221	45	2.2	6.3	1690	**A052_6.3 S2 M2SB4**	273		
221	45	3.1	6.3	3390	**A102_6.3 S2 M2SB4**	276	**A102_6.3 P90 BN90S4**	277
228	43	3.2	12.3	2830	**A102_12.3 S2 M2SA2**	276	**A102_12.3 P80 BN80B2**	277
256	39	2.5	5.5	1640	**A052_5.5 S2 M2SB4**	273		
291	34	2.8	9.6	1600	**A052_9.6 S2 M2SA2**	273	**A052_9.6 P80 BN80B2**	273
329	30	3.0	8.5	1560	**A052_8.5 S2 M2SA2**	273	**A052_8.5 P80 BN80B2**	273
388	25	3.3	7.2	1500	**A052_7.2 S2 M2SA2**	273	**A052_7.2 P80 BN80B2**	273
442	22	3.6	6.3	1450	**A052_6.3 S2 M2SA2**	273	**A052_6.3 P80 BN80B2**	273
512	19.3	3.9	5.5	1400	**A052_5.5 S2 M2SA2**	273	**A052_5.5 P80 BN80B2**	273

1.5 kW

n_2 min-1	M_2 Nm	S	i	R_{n2} N			IEC	
0.86	14767	0.9	1632	75000	**A904_1632 S3 M3SA4**	314	**A904_1632 P90 BN90LA4**	315
0.94	13631	1.0	1507	75000	**A904_1507 S3 M3SA4**	314	**A904_1507 P90 BN90LA4**	315
1.1	11978	1.2	1324	75000	**A904_1324 S3 M3SA4**	314	**A904_1324 P90 BN90LA4**	315
1.2	11057	1.3	1222	75000	**A904_1222 S3 M3SA4**	314	**A904_1222 P90 BN90LA4**	315
1.3	10047	1.4	1111	75000	**A904_1111 S3 M3SA4**	314	**A904_1111 P90 BN90LA4**	315
1.4	9274	1.5	1025	75000	**A904_1025 S3 M3SA4**	314	**A904_1025 P90 BN90LA4**	315
1.4	9060	0.9	1001	65000	**A804_1001 S3 M3SA4**	311	**A804_1001 P90 BN90LA4**	312
1.5	8478	1.7	937.2	75000	**A904_937.2 S3 M3SA4**	314	**A904_937.2 P90 BN90LA4**	315
1.6	8130	1.0	898.7	65000	**A804_898.7 S3 M3SA4**	311	**A804_898.7 P90 BN90LA4**	312
1.6	7826	1.8	865.1	75000	**A904_865.1 S3 M3SA4**	314	**A904_865.1 P90 BN90LA4**	315
1.7	7505	1.1	829.5	65000	**A804_829.5 S3 M3SA4**	311	**A804_829.5 P90 BN90LA4**	312
1.8	6938	2.0	766.9	75000	**A904_766.9 S3 M3SA4**	314	**A904_766.9 P90 BN90LA4**	315
1.9	6894	1.2	762.1	65000	**A804_762.1 S3 M3SA4**	311	**A804_762.1 P90 BN90LA4**	312
2.0	6404	2.2	707.9	75000	**A904_707.9 S3 M3SA4**	314	**A904_707.9 P90 BN90LA4**	315
2.0	6364	1.3	703.5	65000	**A804_703.5 S3 M3SA4**	311	**A804_703.5 P90 BN90LA4**	312
2.2	5832	0.9	644.6	50000	**A704_644.6 S3 M3SA4**	308	**A704_644.6 P90 BN90LA4**	309
2.3	5493	1.5	607.2	65000	**A804_607.2 S3 M3SA4**	311	**A804_607.2 P90 BN90LA4**	312
2.3	5442	2.6	601.6	75000	**A904_601.6 S3 M3SA4**	314	**A904_601.6 P90 BN90LA4**	315
2.4	5383	0.9	595.0	50000	**A704_595.0 S3 M3SA4**	308	**A704_595.0 P90 BN90LA4**	309
2.5	5070	1.6	560.5	65000	**A804_560.5 S3 M3SA4**	311	**A804_560.5 P90 BN90LA4**	312
2.5	5024	2.8	555.3	75000	**A904_555.3 S3 M3SA4**	314	**A904_555.3 P90 BN90LA4**	315
2.7	4663	1.1	515.4	50000	**A704_515.4 S3 M3SA4**	308	**A704_515.4 P90 BN90LA4**	309
2.9	4402	3.2	486.6	75000	**A904_486.6 S3 M3SA4**	314	**A904_486.6 P90 BN90LA4**	315
2.9	4333	1.8	478.9	65000	**A804_478.9 S3 M3SA4**	311	**A804_478.9 P90 BN90LA4**	312
3.0	4304	1.2	475.8	50000	**A704_475.8 S3 M3SA4**	308	**A704_475.8 P90 BN90LA4**	309
3.1	4063	3.4	449.2	75000	**A904_449.2 S3 M3SA4**	314	**A904_449.2 P90 BN90LA4**	315
3.2	3999	2.0	442.1	65000	**A804_442.1 S3 M3SA4**	311	**A804_442.1 P90 BN90LA4**	312
3.5	3620	1.4	400.2	50000	**A704_400.2 S3 M3SA4**	308	**A704_400.2 P90 BN90LA4**	309
3.7	3469	2.3	383.5	65000	**A804_383.5 S3 M3SA4**	311	**A804_383.5 P90 BN90LA4**	312
3.8	3342	1.5	369.4	50000	**A704_369.4 S3 M3SA4**	308	**A704_369.4 P90 BN90LA4**	309
4.0	3202	2.5	354.0	65000	**A804_354.0 S3 M3SA4**	311	**A804_354.0 P90 BN90LA4**	312
4.0	3177	0.9	351.2	30000	**A604_351.2 S3 M3SA4**	304	**A604_351.2 P90 BN90LA4**	305
4.3	2933	1.0	324.2	30000	**A604_324.2 S3 M3SA4**	304	**A604_324.2 P90 BN90LA4**	305

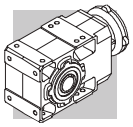

1.5 kW

n_2 min-1	M_2 Nm	S	i	R_{n2} N			IEC	
4.5	2862	1.7	316.4	50000	**A704_316.4 S3 M3SA4**	308	**A704_316.4 P90 BN90LA4**	309
4.7	2718	2.9	300.4	65000	**A804_300.4 S3 M3SA4**	311	**A804_300.4 P90 BN90LA4**	312
4.8	2642	1.9	292.0	50000	**A704_292.0 S3 M3SA4**	308	**A704_292.0 P90 BN90LA4**	309
4.9	2590	1.1	286.3	30000	**A604_286.3 S3 M3SA4**	304	**A604_286.3 P90 BN90LA4**	305
5.1	2509	3.2	277.3	65000	**A804_277.3 S3 M3SA4**	311	**A804_277.3 P90 BN90LA4**	312
5.3	2391	1.2	264.3	30000	**A604_264.3 S3 M3SA4**	304	**A604_264.3 P90 BN90LA4**	305
5.9	2159	2.3	238.6	50000	**A704_238.6 S3 M3SA4**	308	**A704_238.6 P90 BN90LA4**	309
6.2	2046	1.4	226.1	30000	**A604_226.1 S3 M3SA4**	304	**A604_226.1 P90 BN90LA4**	305
6.4	1993	2.5	220.3	50000	**A704_220.3 S3 M3SA4**	308	**A704_220.3 P90 BN90LA4**	309
6.8	1888	1.5	208.7	30000	**A604_208.7 S3 M3SA4**	304	**A604_208.7 P90 BN90LA4**	305
7.3	1796	1.1	194.2	30000	**A553_194.2 S3 M3SA4**	300	**A553_194.2 P90 BN90LA4**	301
7.6	1718	1.6	185.8	30000	**A603_185.8 S3 M3SA4**	304	**A603_185.8 P90 BN90LA4**	305
7.7	1664	3.0	183.9	50000	**A704_183.9 S3 M3SA4**	308	**A704_183.9 P90 BN90LA4**	309
8.1	1619	1.2	175.0	30000	**A553_175.0 S3 M3SA4**	300	**A553_175.0 P90 BN90LA4**	301
8.1	1604	0.9	173.4	20000	**A503_173.4 S3 M3SA4**	296	**A503_173.4 P90 BN90LA4**	297
8.2	1586	1.8	171.5	30000	**A603_171.5 S3 M3SA4**	304	**A603_171.5 P90 BN90LA4**	305
8.3	1536	3.3	169.8	50000	**A704_169.8 S3 M3SA4**	308	**A704_169.8 P90 BN90LA4**	309
8.8	1484	1.3	160.4	30000	**A553_160.4 S3 M3SA4**	300	**A553_160.4 P90 BN90LA4**	301
9.0	1443	1.9	156.0	30000	**A603_156.0 S3 M3SA4**	304	**A603_156.0 P90 BN90LA4**	305
9.1	1430	1.0	154.6	20000	**A503_154.6 S3 M3SA4**	296	**A503_154.6 P90 BN90LA4**	297
9.2	1422	2.8	153.7	50000	**A703_153.7 S3 M3SA4**	308	**A703_153.7 P90 BN90LA4**	309
9.6	1358	1.5	146.8	30000	**A553_146.8 S3 M3SA4**	300	**A553_146.8 P90 BN90LA4**	301
9.8	1332	2.1	144.0	30000	**A603_144.0 S3 M3SA4**	304	**A603_144.0 P90 BN90LA4**	305
10.0	1301	1.2	140.6	20000	**A503_140.6 S3 M3SA4**	296	**A503_140.6 P90 BN90LA4**	297
10.6	1233	2.3	133.3	30000	**A603_133.3 S3 M3SA4**	304	**A603_133.3 P90 BN90LA4**	305
10.6	1228	1.6	132.7	30000	**A553_132.7 S3 M3SA4**	300	**A553_132.7 P90 BN90LA4**	301
10.9	1199	1.3	129.7	20000	**A503_129.7 S3 M3SA4**	296	**A503_129.7 P90 BN90LA4**	297
11.4	1146	1.7	123.9	30000	**A553_123.9 S3 M3SA4**	300	**A553_123.9 P90 BN90LA4**	301
11.5	1138	2.5	123.0	30000	**A603_123.0 S3 M3SA4**	304	**A603_123.0 P90 BN90LA4**	305
12.0	1091	1.4	118.0	20000	**A503_118.0 S3 M3SA4**	296	**A503_118.0 P90 BN90LA4**	297
12.9	1012	1.5	109.4	20000	**A503_109.4 S3 M3SA4**	296	**A503_109.4 P90 BN90LA4**	297
13.1	997	2.8	107.8	30000	**A603_107.8 S3 M3SA4**	304	**A603_107.8 P90 BN90LA4**	305
13.9	938	2.1	101.4	30000	**A553_101.4 S3 M3SA4**	300	**A553_101.4 P90 BN90LA4**	301
14.2	921	1.6	99.5	20000	**A503_99.5 S3 M3SA4**	296	**A503_99.5 P90 BN90LA4**	297
14.2	920	3.0	99.5	30000	**A603_99.5 S3 M3SA4**	304	**A603_99.5 P90 BN90LA4**	305
15.2	858	0.9	92.8	15000	**A413_92.8 S3 M3SA4**	292	**A413_92.8 P90 BN90LA4**	293
15.7	828	1.8	89.5	20000	**A503_89.5 S3 M3SA4**	296	**A503_89.5 P90 BN90LA4**	297
16.3	799	3.5	86.4	30000	**A603_86.4 S3 M3SA4**	304	**A603_86.4 P90 BN90LA4**	305
17.3	753	2.0	81.5	20000	**A503_81.5 S3 M3SA4**	296	**A503_81.5 P90 BN90LA4**	297
17.7	736	2.7	79.5	30000	**A553_79.5 S3 M3SA4**	300	**A553_79.5 P90 BN90LA4**	301
17.8	757	1.1	79.2	15000	**A412_79.2 S3 M3SA4**	292	**A412_79.2 P90 BN90LA4**	293
19.8	681	1.2	71.3	15000	**A412_71.3 S3 M3SA4**	292	**A412_71.3 P90 BN90LA4**	293
20.1	650	2.3	70.2	20000	**A503_70.2 S3 M3SA4**	296	**A503_70.2 P90 BN90LA4**	297
21.4	629	1.0	65.8	11600	**A352_65.8 S3 M3SA4**	288	**A352_65.8 P90 BN90LA4**	289
21.9	595	3.4	64.3	30000	**A553_64.3 S3 M3SA4**	300	**A553_64.3 P90 BN90LA4**	301
22.0	613	1.4	64.2	15000	**A412_64.2 S3 M3SA4**	292	**A412_64.2 P90 BN90LA4**	293
22.1	591	2.5	63.9	20000	**A503_63.9 S3 M3SA4**	296	**A503_63.9 P90 BN90LA4**	297
23.4	577	1.0	60.4	11500	**A352_60.4 S3 M3SA4**	288	**A352_60.4 P90 BN90LA4**	289
24.0	562	1.5	58.8	15000	**A412_58.8 S3 M3SA4**	292	**A412_58.8 P90 BN90LA4**	293
24.8	526	2.9	56.8	20000	**A503_56.8 S3 M3SA4**	296	**A503_56.8 P90 BN90LA4**	297
26.0	519	1.2	54.3	11300	**A352_54.3 S3 M3SA4**	288	**A352_54.3 P90 BN90LA4**	289

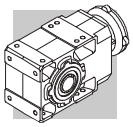

1.5 kW

n_2 min-1	M_2 Nm	S	i	R_{n2} N			IEC	
26.5	508	1.7	53.1	15000	**A412_53.1 S3 M3SA4**	292	**A412_53.1 P90 BN90LA4**	293
27.3	478	3.1	51.7	19700	**A503_51.7 S3 M3SA4**	296	**A503_51.7 P90 BN90LA4**	297
28.7	469	1.3	49.1	11100	**A352_49.1 S3 M3SA4**	288	**A352_49.1 P90 BN90LA4**	289
29.2	461	1.8	48.3	14900	**A412_48.3 S3 M3SA4**	292	**A412_48.3 P90 BN90LA4**	293
31	438	1.4	45.8	11000	**A352_45.8 S3 M3SA4**	288	**A352_45.8 P90 BN90LA4**	289
31	431	1.9	45.1	14600	**A412_45.1 S3 M3SA4**	292	**A412_45.1 P90 BN90LA4**	293
32	415	1.0	43.4	6450	**A302_43.4 S3 M3SA4**	284	**A302_43.4 P90 BN90LA4**	285
34	399	1.5	41.8	10800	**A352_41.8 S3 M3SA4**	288	**A352_41.8 P90 BN90LA4**	289
36	375	1.1	39.3	6380	**A302_39.3 S3 M3SA4**	284	**A302_39.3 P90 BN90LA4**	285
38	350	1.2	36.6	6330	**A302_36.6 S3 M3SA4**	284	**A302_36.6 P90 BN90LA4**	285
38	350	1.7	36.6	10500	**A352_36.6 S3 M3SA4**	288	**A352_36.6 P90 BN90LA4**	289
39	343	2.3	35.9	13800	**A412_35.9 S3 M3SA4**	292	**A412_35.9 P90 BN90LA4**	293
42	319	1.3	33.4	6260	**A302_33.4 S3 M3SA4**	284	**A302_33.4 P90 BN90LA4**	285
43	317	1.9	33.2	10300	**A352_33.2 S3 M3SA4**	288	**A352_33.2 P90 BN90LA4**	289
48	280	1.5	29.3	6140	**A302_29.3 S3 M3SA4**	284	**A302_29.3 P90 BN90LA4**	285
50	272	2.2	28.4	9940	**A352_28.4 S3 M3SA4**	288	**A352_28.4 P90 BN90LA4**	289
50	271	2.7	28.3	13000	**A412_28.3 S3 M3SA4**	292	**A412_28.3 P90 BN90LA4**	293
53	254	1.6	26.5	6040	**A302_26.5 S3 M3SA4**	284	**A302_26.5 P90 BN90LA4**	285
53	253	1.0	26.5	3790	**A202_26.5 S3 M3SA4**	280	**A202_26.5 P90 BN90LA4**	281
55	245	2.4	25.7	9710	**A352_25.7 S3 M3SA4**	288	**A352_25.7 P90 BN90LA4**	289
61	221	1.1	23.1	3760	**A202_23.1 S3 M3SA4**	280	**A202_23.1 P90 BN90LA4**	281
62	217	1.9	22.8	5870	**A302_22.8 S3 M3SA4**	284	**A302_22.8 P90 BN90LA4**	285
62	217	3.1	22.7	12200	**A412_22.7 S3 M3SA4**	292	**A412_22.7 P90 BN90LA4**	293
63	215	2.8	22.5	9400	**A352_22.5 S3 M3SA4**	288	**A352_22.5 P90 BN90LA4**	289
66	203	1.2	21.2	3730	**A202_21.2 S3 M3SA4**	280	**A202_21.2 P90 BN90LA4**	281
69	196	2.1	20.5	5760	**A302_20.5 S3 M3SA4**	284	**A302_20.5 P90 BN90LA4**	285
69	195	3.1	20.4	9170	**A352_20.4 S3 M3SA4**	288	**A352_20.4 P90 BN90LA4**	289
78	173	1.4	18.1	3660	**A202_18.1 S3 M3SA4**	280	**A202_18.1 P90 BN90LA4**	281
78	172	2.3	18.0	5600	**A302_18.0 S3 M3SA4**	284	**A302_18.0 P90 BN90LA4**	285
86	157	1.0	16.4	3720	**A102_16.4 S3 M3SA4**	276	**A102_16.4 P90 BN90LA4**	277
86	156	2.5	16.3	5480	**A302_16.3 S3 M3SA4**	284	**A302_16.3 P90 BN90LA4**	285
87	154	1.6	16.2	3600	**A202_16.2 S3 M3SA4**	280	**A202_16.2 P90 BN90LA4**	281
100	134	1.8	14.1	3530	**A202_14.1 S3 M3SA4**	280	**A202_14.1 P90 BN90LA4**	281
101	133	1.1	13.9	3090	**A102_13.9 S3 M3SA4**	276	**A102_13.9 P90 BN90LA4**	277
104	130	2.9	13.6	5250	**A302_13.6 S3 M3SA4**	284	**A302_13.6 P90 BN90LA4**	285
115	118	1.2	12.3	3040	**A102_12.3 S3 M3SA4**	276	**A102_12.3 P90 BN90LA4**	277
118	114	1.8	12.0	3420	**A202_12.0 S3 M3SA4**	280	**A202_12.0 P90 BN90LA4**	281
120	113	2.7	11.8	5060	**A302_11.8 S3 M3SA4**	284	**A302_11.8 P90 BN90LA4**	285
123	109	3.2	22.8	5040	**A302_22.8 S2 M2SB2**	284	**A302_22.8 P90 BN90SA2**	285
134	101	1.5	10.6	2990	**A102_10.6 S3 M3SA4**	276	**A102_10.6 P90 BN90LA4**	277
135	100	3.4	10.5	4930	**A302_10.5 S3 M3SA4**	284	**A302_10.5 P90 BN90LA4**	285
136	99	2.3	10.3	3330	**A202_10.3 S3 M3SA4**	280	**A202_10.3 P90 BN90LA4**	281
147	92	1.5	9.6	2940	**A102_9.6 S3 M3SA4**	276	**A102_9.6 P90 BN90LA4**	277
150	90	2.3	9.4	3250	**A202_9.4 S3 M3SA4**	280	**A202_9.4 P90 BN90LA4**	281
151	89	3.4	9.3	4770	**A302_9.3 S3 M3SA4**	284	**A302_9.3 P90 BN90LA4**	285
166	81	1.7	8.5	3420	**A102_8.5 S3 M3SA4**	276	**A102_8.5 P90 BN90LA4**	277
168	80	2.6	8.4	3180	**A202_8.4 S3 M3SA4**	280	**A202_8.4 P90 BN90LA4**	281
193	70	3.0	7.3	3080	**A202_7.3 S3 M3SA4**	280	**A202_7.3 P90 BN90LA4**	281
196	69	2.0	7.2	2790	**A102_7.2 S3 M3SA4**	276	**A102_7.2 P90 BN90LA4**	277
216	62	3.4	6.5	3000	**A202_6.5 S3 M3SA4**	280	**A202_6.5 P90 BN90LA4**	281
223	61	2.3	6.3	3220	**A102_6.3 S3 M3SA4**	276	**A102_6.3 P90 BN90LA4**	277

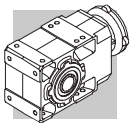

1.5 kW

n_2 min^{-1}	M_2 Nm	S	i	R_{n2} N			IEC	
258	52	2.7	5.5	2630	**A102_5.5 S3 M3SA4**	276	**A102_5.5 P90 BN90LA4**	277
291	46	3.0	9.6	2560	**A102_9.6 S2 M2SB2**	276	**A102_9.6 P90 BN90SA2**	277
329	41	3.4	8.5	2950	**A102_8.5 S2 M2SB2**	276	**A102_8.5 P90 BN90SA2**	277
388	35	2.4	7.2	1420	**A052_7.2 S2 M2SB2**	273		
442	30	2.6	6.3	1380	**A052_6.3 S2 M2SB2**	273		
512	26	2.9	5.5	1340	**A052_5.5 S2 M2SB2**	273		

2.2 kW

n_2 min^{-1}	M_2 Nm	S	i	R_{n2} N			IEC	
1.2	16217	0.9	1222	75000	**A904_1222 S3 M3LA4**	314	**A904_1222 P100 BN100LA4**	315
1.3	14736	1.0	1111	75000	**A904_1111 S3 M3LA4**	314	**A904_1111 P100 BN100LA4**	315
1.4	13602	1.0	1025	75000	**A904_1025 S3 M3LA4**	314	**A904_1025 P100 BN100LA4**	315
1.5	12435	1.1	937.2	75000	**A904_937.2 S3 M3LA4**	314	**A904_937.2 P100 BN100LA4**	315
1.6	11479	1.2	865.1	75000	**A904_865.1 S3 M3LA4**	314	**A904_865.1 P100 BN100LA4**	315
1.8	10176	1.4	766.9	75000	**A904_766.9 S3 M3LA4**	314	**A904_766.9 P100 BN100LA4**	315
2.0	9393	1.5	707.9	75000	**A904_707.9 S3 M3LA4**	314	**A904_707.9 P100 BN100LA4**	315
2.0	9334	0.9	703.5	65000	**A804_703.5 S3 M3LA4**	311	**A804_703.5 P100 BN100LA4**	312
2.3	8056	1.0	607.2	65000	**A804_607.2 S3 M3LA4**	311	**A804_607.2 P100 BN100LA4**	312
2.3	7982	1.8	601.6	75000	**A904_601.6 S3 M3LA4**	314	**A904_601.6 P100 BN100LA4**	315
2.5	7436	1.1	560.5	65000	**A804_560.5 S3 M3LA4**	311	**A804_560.5 P100 BN100LA4**	312
2.5	7368	1.9	555.3	75000	**A904_555.3 S3 M3LA4**	314	**A904_555.3 P100 BN100LA4**	315
2.9	6456	2.2	486.6	75000	**A904_486.6 S3 M3LA4**	314	**A904_486.6 P100 BN100LA4**	315
2.9	6355	1.3	478.9	65000	**A804_478.9 S3 M3LA4**	311	**A804_478.9 P100 BN100LA4**	312
3.1	5960	2.3	449.2	75000	**A904_449.2 S3 M3LA4**	314	**A904_449.2 P100 BN100LA4**	315
3.2	5866	1.4	442.1	65000	**A804_442.1 S3 M3LA4**	311	**A804_442.1 P100 BN100LA4**	312
3.5	5310	0.9	400.2	50000	**A704_400.2 S3 M3LA4**	308	**A704_400.2 P100 BN100LA4**	309
3.7	5114	2.7	385.4	75000	**A904_385.4 S3 M3LA4**	314	**A904_385.4 P100 BN100LA4**	315
3.7	5088	1.6	383.5	65000	**A804_383.5 S3 M3LA4**	311	**A804_383.5 P100 BN100LA4**	312
3.8	4901	1.0	369.4	50000	**A704_369.4 S3 M3LA4**	308	**A704_369.4 P100 BN100LA4**	309
4.0	4721	3.0	355.8	75000	**A904_355.8 S3 M3LA4**	314	**A904_355.8 P100 BN100LA4**	315
4.0	4697	1.7	354.0	65000	**A804_354.0 S3 M3LA4**	311	**A804_354.0 P100 BN100LA4**	312
4.5	4198	1.2	316.4	50000	**A704_316.4 S3 M3LA4**	308	**A704_316.4 P100 BN100LA4**	309
4.6	4045	3.5	304.9	75000	**A904_304.9 S3 M3LA4**	314	**A904_304.9 P100 BN100LA4**	315
4.7	3986	2.0	300.4	65000	**A804_300.4 S3 M3LA4**	311	**A804_300.4 P100 BN100LA4**	312
4.8	3875	1.3	292.0	50000	**A704_292.0 S3 M3LA4**	308	**A704_292.0 P100 BN100LA4**	309
5.1	3679	2.2	277.3	65000	**A804_277.3 S3 M3LA4**	311	**A804_277.3 P100 BN100LA4**	312
5.9	3166	1.6	238.6	50000	**A704_238.6 S3 M3LA4**	308	**A704_238.6 P100 BN100LA4**	309
6.1	3087	2.6	232.6	65000	**A804_232.6 S3 M3LA4**	311	**A804_232.6 P100 BN100LA4**	312
6.2	3000	0.9	226.1	30000	**A604_226.1 S3 M3LA4**	304	**A604_226.1 P100 BN100LA4**	305
6.4	2922	1.7	220.3	50000	**A704_220.3 S3 M3LA4**	308	**A704_220.3 P100 BN100LA4**	309
6.6	2849	2.8	214.7	65000	**A804_214.7 S3 M3LA4**	311	**A804_214.7 P100 BN100LA4**	312
6.8	2770	1.0	208.7	30000	**A604_208.7 S3 M3LA4**	304	**A604_208.7 P100 BN100LA4**	305
7.6	2520	1.1	185.8	30000	**A603_185.8 S3 M3LA4**	304	**A603_185.8 P100 BN100LA4**	305
7.7	2440	2.0	183.9	50000	**A704_183.9 S3 M3LA4**	308	**A704_183.9 P100 BN100LA4**	309
8.2	2326	1.2	171.5	30000	**A603_171.5 S3 M3LA4**	304	**A603_171.5 P100 BN100LA4**	305
8.2	2273	3.5	171.3	65000	**A804_171.3 S3 M3LA4**	311	**A804_171.3 P100 BN100LA4**	312
8.3	2252	2.2	169.8	50000	**A704_169.8 S3 M3LA4**	308	**A704_169.8 P100 BN100LA4**	309

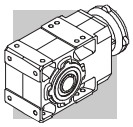

2.2 kW

n_2 min^{-1}	M_2 Nm	S	i	R_{n2} N			IEC	
8.8	2177	0.9	160.4	30000	**A553_160.4 S3 M3LA4**	300	**A553_160.4 P100 BN100LA4**	301
9.0	2117	1.3	156.0	30000	**A603_156.0 S3 M3LA4**	304	**A603_156.0 P100 BN100LA4**	305
9.2	2085	1.9	153.7	50000	**A703_153.7 S3 M3LA4**	308	**A703_153.7 P100 BN100LA4**	309
9.6	1992	1.0	146.8	30000	**A553_146.8 S3 M3LA4**	300	**A553_146.8 P100 BN100LA4**	301
9.8	1954	1.4	144.0	30000	**A603_144.0 S3 M3LA4**	304	**A603_144.0 P100 BN100LA4**	305
9.9	1925	2.6	141.9	50000	**A703_141.9 S3 M3LA4**	308	**A703_141.9 P100 BN100LA4**	309
10.6	1808	1.5	133.3	30000	**A603_133.3 S3 M3LA4**	304	**A603_133.3 P100 BN100LA4**	305
10.6	1801	1.1	132.7	30000	**A553_132.7 S3 M3LA4**	300	**A553_132.7 P100 BN100LA4**	301
10.8	1773	2.8	130.7	50000	**A703_130.7 S3 M3LA4**	308	**A703_130.7 P100 BN100LA4**	309
11.4	1681	1.2	123.9	30000	**A553_123.9 S3 M3LA4**	300	**A553_123.9 P100 BN100LA4**	301
11.5	1669	1.7	123.0	30000	**A603_123.0 S3 M3LA4**	304	**A603_123.0 P100 BN100LA4**	305
11.7	1636	3.1	120.6	50000	**A703_120.6 S3 M3LA4**	308	**A703_120.6 P100 BN100LA4**	309
12.0	1600	0.9	118.0	20000	**A503_118.0 S3 M3LA4**	296	**A503_118.0 P100 BN100LA4**	297
12.9	1485	1.0	109.4	20000	**A503_109.4 S3 M3LA4**	296	**A503_109.4 P100 BN100LA4**	297
13.1	1463	1.9	107.8	30000	**A603_107.8 S3 M3LA4**	304	**A603_107.8 P100 BN100LA4**	305
13.5	1414	3.5	104.2	50000	**A703_104.2 S3 M3LA4**	308	**A703_104.2 P100 BN100LA4**	309
13.9	1375	1.5	101.4	30000	**A553_101.4 S3 M3LA4**	300	**A553_101.4 P100 BN100LA4**	301
14.2	1350	1.1	99.5	20000	**A503_99.5 S3 M3LA4**	296	**A503_99.5 P100 BN100LA4**	297
14.2	1350	2.1	99.5	30000	**A603_99.5 S3 M3LA4**	304	**A603_99.5 P100 BN100LA4**	305
15.7	1215	1.2	89.5	19800	**A503_89.5 S3 M3LA4**	296	**A503_89.5 P100 BN100LA4**	297
16.3	1172	2.4	86.4	30000	**A603_86.4 S3 M3LA4**	304	**A603_86.4 P100 BN100LA4**	305
17.3	1105	1.4	81.5	19600	**A503_81.5 S3 M3LA4**	296	**A503_81.5 P100 BN100LA4**	297
17.7	1082	2.6	79.7	30000	**A603_79.7 S3 M3LA4**	304	**A603_79.7 P100 BN100LA4**	305
17.7	1079	1.9	79.5	30000	**A553_79.5 S3 M3LA4**	300	**A553_79.5 P100 BN100LA4**	301
20.0	955	2.9	70.4	30000	**A603_70.4 S3 M3LA4**	304	**A603_70.4 P100 BN100LA4**	305
20.1	953	1.6	70.2	19300	**A503_70.2 S3 M3LA4**	296	**A503_70.2 P100 BN100LA4**	297
21.7	882	3.2	65.0	30000	**A603_65.0 S3 M3LA4**	304	**A603_65.0 P100 BN100LA4**	305
21.9	873	2.3	64.3	30000	**A553_64.3 S3 M3LA4**	300	**A553_64.3 P100 BN100LA4**	301
22.0	899	0.9	64.2	14500	**A412_64.2 S3 M3LA4**	292	**A412_64.2 P100 BN100LA4**	293
22.1	867	1.7	63.9	19000	**A503_63.9 S3 M3LA4**	296	**A503_63.9 P100 BN100LA4**	297
24.0	824	1.0	58.8	14400	**A412_58.8 S3 M3LA4**	292	**A412_58.8 P100 BN100LA4**	293
24.8	771	1.9	56.8	18600	**A503_56.8 S3 M3LA4**	296	**A503_56.8 P100 BN100LA4**	297
26.5	745	1.1	53.1	14100	**A412_53.1 S3 M3LA4**	292	**A412_53.1 P100 BN100LA4**	293
27.3	701	2.1	51.7	18300	**A503_51.7 S3 M3LA4**	296	**A503_51.7 P100 BN100LA4**	297
27.7	691	2.9	51.0	30000	**A553_51.0 S3 M3LA4**	300	**A553_51.0 P100 BN100LA4**	301
28.7	688	0.9	49.1	9900	**A352_49.1 S3 M3LA4**	288	**A352_49.1 P100 BN100LA4**	289
29.2	677	1.3	48.3	13900	**A412_48.3 S3 M3LA4**	292	**A412_48.3 P100 BN100LA4**	293
31	642	0.9	45.8	9840	**A352_45.8 S3 M3LA4**	288	**A352_45.8 P100 BN100LA4**	289
31	632	1.3	45.1	13700	**A412_45.1 S3 M3LA4**	292	**A412_45.1 P100 BN100LA4**	293
31	611	2.5	45.0	17900	**A503_45.0 S3 M3LA4**	296	**A503_45.0 P100 BN100LA4**	297
34	586	1.0	41.8	9750	**A352_41.8 S3 M3LA4**	288	**A352_41.8 P100 BN100LA4**	289
34	555	2.7	40.9	17500	**A503_40.9 S3 M3LA4**	296	**A503_40.9 P100 BN100LA4**	297
38	513	1.2	36.6	9600	**A352_36.6 S3 M3LA4**	288	**A352_36.6 P100 BN100LA4**	289
39	503	1.6	35.9	13100	**A412_35.9 S3 M3LA4**	292	**A412_35.9 P100 BN100LA4**	293
40	483	3.1	35.6	17000	**A503_35.6 S3 M3LA4**	296	**A503_35.6 P100 BN100LA4**	297
43	465	1.3	33.2	9460	**A352_33.2 S3 M3LA4**	288	**A352_33.2 P100 BN100LA4**	289
44	439	3.4	32.4	16600	**A503_32.4 S3 M3LA4**	296	**A503_32.4 P100 BN100LA4**	297
48	411	1.0	29.3	5380	**A302_29.3 S3 M3LA4**	284	**A302_29.3 P100 BN100LA4**	285
50	399	1.5	28.4	9230	**A352_28.4 S3 M3LA4**	288	**A352_28.4 P100 BN100LA4**	289
50	397	1.8	28.3	12400	**A412_28.3 S3 M3LA4**	292	**A412_28.3 P100 BN100LA4**	293
53	372	1.1	26.5	5350	**A302_26.5 S3 M3LA4**	284	**A302_26.5 P100 BN100LA4**	285

Bonfiglioli Riduttori

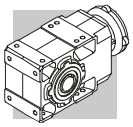

2.2 kW

n_2 min-1	M_2 Nm	S	i	R_{n2} N			IEC	
55	360	1.7	25.7	9070	**A352_25.7 S3 M3LA4**	288	**A352_25.7 P100 BN100LA4**	289
62	319	1.3	22.8	5290	**A302_22.8 S3 M3LA4**	284	**A302_22.8 P100 BN100LA4**	285
62	318	2.1	22.7	11700	**A412_22.7 S3 M3LA4**	292	**A412_22.7 P100 BN100LA4**	293
63	315	1.9	22.5	8840	**A352_22.5 S3 M3LA4**	288	**A352_22.5 P100 BN100LA4**	289
69	288	1.4	20.5	5230	**A302_20.5 S3 M3LA4**	284	**A302_20.5 P100 BN100LA4**	285
69	286	2.1	20.4	8660	**A352_20.4 S3 M3LA4**	288	**A352_20.4 P100 BN100LA4**	289
78	254	1.0	18.1	3140	**A202_18.1 S3 M3LA4**	280	**A202_18.1 P100 BN100LA4**	281
78	252	1.6	18.0	5140	**A302_18.0 S3 M3LA4**	284	**A302_18.0 P100 BN100LA4**	285
79	249	2.5	17.8	11000	**A412_17.8 S3 M3LA4**	292	**A412_17.8 P100 BN100LA4**	293
83	238	2.5	17.0	8320	**A352_17.0 S3 M3LA4**	288	**A352_17.0 P100 BN100LA4**	289
86	229	1.7	16.3	5060	**A302_16.3 S3 M3LA4**	284	**A302_16.3 P100 BN100LA4**	285
87	227	1.1	16.2	3140	**A202_16.2 S3 M3LA4**	280	**A202_16.2 P100 BN100LA4**	281
88	226	2.7	16.1	10800	**A412_16.1 S3 M3LA4**	292	**A412_16.1 P100 BN100LA4**	293
91	217	2.8	15.5	8150	**A352_15.5 S3 M3LA4**	288	**A352_15.5 P100 BN100LA4**	289
100	197	1.2	14.1	3120	**A202_14.1 S3 M3LA4**	280	**A202_14.1 P100 BN100LA4**	281
102	193	3.0	13.8	10300	**A412_13.8 S3 M3LA4**	292	**A412_13.8 P100 BN100LA4**	293
104	190	1.9	13.6	4900	**A302_13.6 S3 M3LA4**	284	**A302_13.6 P100 BN100LA4**	285
108	183	3.3	13.1	7820	**A352_13.1 S3 M3LA4**	288	**A352_13.1 P100 BN100LA4**	289
118	168	1.3	12.0	3070	**A202_12.0 S3 M3LA4**	280	**A202_12.0 P100 BN100LA4**	281
120	165	1.8	11.8	4750	**A302_11.8 S3 M3LA4**	284	**A302_11.8 P100 BN100LA4**	285
120	165	2.4	11.8	7710	**A352_11.8 S3 M3LA4**	288	**A352_11.8 P100 BN100LA4**	289
120	165	3.3	11.7	9870	**A412_11.7 S3 M3LA4**	292	**A412_11.7 P100 BN100LA4**	293
123	160	2.0	23.1	3070	**A202_23.1 S3 M3SA2**	280	**A202_23.1 P90 BN90L2**	281
133	149	2.7	10.6	7510	**A352_10.6 S3 M3LA4**	288	**A352_10.6 P100 BN100LA4**	289
134	148	1.0	10.6	2600	**A102_10.6 S3 M3LA4**	276	**A102_10.6 P100 BN100LA4**	277
135	147	2.3	10.5	4660	**A302_10.5 S3 M3LA4**	284	**A302_10.5 P100 BN100LA4**	285
136	145	1.6	10.3	3030	**A202_10.3 S3 M3LA4**	280	**A202_10.3 P100 BN100LA4**	281
147	135	1.0	9.6	2580	**A102_9.6 S3 M3LA4**	276	**A102_9.6 P100 BN100LA4**	277
150	131	1.6	9.4	2980	**A202_9.4 S3 M3LA4**	280	**A202_9.4 P100 BN100LA4**	281
151	130	2.3	9.3	4530	**A302_9.3 S3 M3LA4**	284	**A302_9.3 P100 BN100LA4**	285
151	130	3.1	9.3	7240	**A352_9.3 S3 M3LA4**	288	**A352_9.3 P100 BN100LA4**	289
166	119	1.2	8.5	3050	**A102_8.5 S3 M3LA4**	276	**A102_8.5 P100 BN100LA4**	277
167	119	2.5	8.5	4430	**A302_8.5 S3 M3LA4**	284	**A302_8.5 P100 BN100LA4**	285
167	119	3.2	8.5	7060	**A352_8.5 S3 M3LA4**	288	**A352_8.5 P100 BN100LA4**	289
168	117	1.8	8.4	2930	**A202_8.4 S3 M3LA4**	280	**A202_8.4 P100 BN100LA4**	281
193	102	2.1	7.3	2860	**A202_7.3 S3 M3LA4**	280	**A202_7.3 P100 BN100LA4**	281
196	101	1.4	7.2	2520	**A102_7.2 S3 M3LA4**	276	**A102_7.2 P100 BN100LA4**	277
201	98	3.0	7.0	4240	**A302_7.0 S3 M3LA4**	284	**A302_7.0 P100 BN100LA4**	285
216	92	2.3	6.5	2810	**A202_6.5 S3 M3LA4**	280	**A202_6.5 P100 BN100LA4**	281
220	90	3.3	6.4	4150	**A302_6.4 S3 M3LA4**	284	**A302_6.4 P100 BN100LA4**	285
223	89	1.6	6.3	2950	**A102_6.3 S3 M3LA4**	276	**A102_6.3 P100 BN100LA4**	277
258	77	1.8	5.5	2430	**A102_5.5 S3 M3LA4**	276	**A102_5.5 P100 BN100LA4**	277
263	75	2.8	5.4	2700	**A202_5.4 S3 M3LA4**	280	**A202_5.4 P100 BN100LA4**	281
304	65	3.2	9.4	2620	**A202_9.4 S3 M3SA2**	280	**A202_9.4 P90 BN90L2**	281

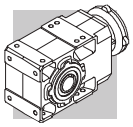

3.0 kW

n_2 min^{-1}	M_2 Nm	S	i	R_{n2} N			IEC	
1.6	15653	0.9	865.1	75000	**A904_865.1 S3 M3LB4**	314	**A904_865.1 P100 BN100LB4**	315
1.8	13876	1.0	766.9	75000	**A904_766.9 S3 M3LB4**	314	**A904_766.9 P100 BN100LB4**	315
2.0	12809	1.1	707.9	75000	**A904_707.9 S3 M3LB4**	314	**A904_707.9 P100 BN100LB4**	315
2.3	10885	1.3	601.6	75000	**A904_601.6 S3 M3LB4**	314	**A904_601.6 P100 BN100LB4**	315
2.5	10047	1.4	555.3	75000	**A904_555.3 S3 M3LB4**	314	**A904_555.3 P100 BN100LB4**	315
2.9	8804	1.6	486.6	75000	**A904_486.6 S3 M3LB4**	314	**A904_486.6 P100 BN100LB4**	315
2.9	8665	0.9	478.9	65000	**A804_478.9 S3 M3LB4**	311	**A804_478.9 P100 BN100LB4**	312
3.1	8127	1.7	449.2	75000	**A904_449.2 S3 M3LB4**	314	**A904_449.2 P100 BN100LB4**	315
3.2	7999	1.0	442.1	65000	**A804_442.1 S3 M3LB4**	311	**A804_442.1 P100 BN100LB4**	312
3.7	6974	2.0	385.4	75000	**A904_385.4 S3 M3LB4**	314	**A904_385.4 P100 BN100LB4**	315
3.7	6938	1.2	383.5	65000	**A804_383.5 S3 M3LB4**	311	**A804_383.5 P100 BN100LB4**	312
4.0	6438	2.2	355.8	75000	**A904_355.8 S3 M3LB4**	314	**A904_355.8 P100 BN100LB4**	315
4.0	6405	1.2	354.0	65000	**A804_354.0 S3 M3LB4**	311	**A804_354.0 P100 BN100LB4**	312
4.5	5724	0.9	316.4	50000	**A704_316.4 S3 M3LB4**	308	**A704_316.4 P100 BN100LB4**	309
4.6	5517	2.5	304.9	75000	**A904_304.9 S3 M3LB4**	314	**A904_304.9 P100 BN100LB4**	315
4.7	5435	1.5	300.4	65000	**A804_300.4 S3 M3LB4**	311	**A804_300.4 P100 BN100LB4**	312
4.8	5284	0.9	292.0	50000	**A704_292.0 S3 M3LB4**	308	**A704_292.0 P100 BN100LB4**	309
5.0	5092	2.7	281.4	75000	**A904_281.4 S3 M3LB4**	314	**A904_281.4 P100 BN100LB4**	315
5.1	5017	1.6	277.3	65000	**A804_277.3 S3 M3LB4**	311	**A804_277.3 P100 BN100LB4**	312
5.9	4317	1.2	238.6	50000	**A704_238.6 S3 M3LB4**	308	**A704_238.6 P100 BN100LB4**	309
6.1	4209	1.9	232.6	65000	**A804_232.6 S3 M3LB4**	311	**A804_232.6 P100 BN100LB4**	312
6.2	4097	3.4	226.4	75000	**A904_226.4 S3 M3LB4**	314	**A904_226.4 P100 BN100LB4**	315
6.4	3985	1.3	220.3	50000	**A704_220.3 S3 M3LB4**	308	**A704_220.3 P100 BN100LB4**	309
6.6	3885	2.1	214.7	65000	**A804_214.7 S3 M3LB4**	311	**A804_214.7 P100 BN100LB4**	312
7.7	3327	1.5	183.9	50000	**A704_183.9 S3 M3LB4**	308	**A704_183.9 P100 BN100LB4**	309
8.2	3172	0.9	171.5	30000	**A603_171.5 S3 M3LB4**	304	**A603_171.5 P100 BN100LB4**	305
8.2	3099	2.6	171.3	65000	**A804_171.3 S3 M3LB4**	311	**A804_171.3 P100 BN100LB4**	312
8.3	3071	1.6	169.8	50000	**A704_169.8 S3 M3LB4**	308	**A704_169.8 P100 BN100LB4**	309
9.0	2901	2.8	156.8	65000	**A803_156.8 S3 M3LB4**	311	**A803_156.8 P100 BN100LB4**	312
9.0	2887	1.0	156.0	30000	**A603_156.0 S3 M3LB4**	304	**A603_156.0 P100 BN100LB4**	305
9.2	2843	1.4	153.7	50000	**A703_153.7 S3 M3LB4**	308	**A703_153.7 P100 BN100LB4**	309
9.7	2678	3.0	144.7	65000	**A803_144.7 S3 M3LB4**	311	**A803_144.7 P100 BN100LB4**	312
9.8	2665	1.1	144.0	30000	**A603_144.0 S3 M3LB4**	304	**A603_144.0 P100 BN100LB4**	305
9.9	2624	1.9	141.9	50000	**A703_141.9 S3 M3LB4**	308	**A703_141.9 P100 BN100LB4**	309
10.6	2466	1.1	133.3	30000	**A603_133.3 S3 M3LB4**	304	**A603_133.3 P100 BN100LB4**	305
10.8	2417	2.1	130.7	50000	**A703_130.7 S3 M3LB4**	308	**A703_130.7 P100 BN100LB4**	309
11.2	2324	3.4	125.6	65000	**A803_125.6 S3 M3LB4**	311	**A803_125.6 P100 BN100LB4**	312
11.5	2276	1.2	123.0	30000	**A603_123.0 S3 M3LB4**	304	**A603_123.0 P100 BN100LB4**	305
11.7	2231	2.2	120.6	50000	**A703_120.6 S3 M3LB4**	308	**A703_120.6 P100 BN100LB4**	309
13.1	1994	1.4	107.8	30000	**A603_107.8 S3 M3LB4**	304	**A603_107.8 P100 BN100LB4**	305
13.5	1928	2.6	104.2	50000	**A703_104.2 S3 M3LB4**	308	**A703_104.2 P100 BN100LB4**	309
13.9	1876	1.1	101.4	30000	**A553_101.4 S3 M3LB4**	300	**A553_101.4 P100 BN100LB4**	301
14.2	1841	1.5	99.5	30000	**A603_99.5 S3 M3LB4**	304	**A603_99.5 P100 BN100LB4**	305
14.7	1780	2.8	96.2	50000	**A703_96.2 S3 M3LB4**	308	**A703_96.2 P100 BN100LB4**	309
15.7	1657	0.9	89.5	17100	**A503_89.5 S3 M3LB4**	296	**A503_89.5 P100 BN100LB4**	297
16.3	1598	1.8	86.4	30000	**A603_86.4 S3 M3LB4**	304	**A603_86.4 P100 BN100LB4**	305
16.4	1590	3.1	85.9	50000	**A703_85.9 S3 M3LB4**	308	**A703_85.9 P100 BN100LB4**	309
17.3	1507	1.0	81.5	17200	**A503_81.5 S3 M3LB4**	296	**A503_81.5 P100 BN100LB4**	297
17.7	1475	1.9	79.7	30000	**A603_79.7 S3 M3LB4**	304	**A603_79.7 P100 BN100LB4**	305
17.7	1471	1.4	79.5	30000	**A553_79.5 S3 M3LB4**	300	**A553_79.5 P100 BN100LB4**	301
17.8	1468	3.4	79.3	50000	**A703_79.3 S3 M3LB4**	308	**A703_79.3 P100 BN100LB4**	309

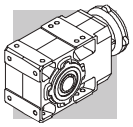

3.0 kW

n_2 min-1	M_2 Nm	S	i	R_{n2} N			IEC	
20.0	1303	2.1	70.4	30000	**A603_70.4 S3 M3LB4**	304	**A603_70.4 P100 BN100LB4**	305
20.1	1299	1.2	70.2	17200	**A503_70.2 S3 M3LB4**	296	**A503_70.2 P100 BN100LB4**	297
21.7	1202	2.3	65.0	30000	**A603_65.0 S3 M3LB4**	304	**A603_65.0 P100 BN100LB4**	305
21.9	1190	1.7	64.3	30000	**A553_64.3 S3 M3LB4**	300	**A553_64.3 P100 BN100LB4**	301
22.1	1182	1.3	63.9	17100	**A503_63.9 S3 M3LB4**	296	**A503_63.9 P100 BN100LB4**	297
24.8	1051	1.4	56.8	17000	**A503_56.8 S3 M3LB4**	296	**A503_56.8 P100 BN100LB4**	297
25.4	1029	2.7	55.6	30000	**A603_55.6 S3 M3LB4**	304	**A603_55.6 P100 BN100LB4**	305
27.3	956	1.6	51.7	16800	**A503_51.7 S3 M3LB4**	296	**A503_51.7 P100 BN100LB4**	297
27.5	950	2.9	51.3	30000	**A603_51.3 S3 M3LB4**	304	**A603_51.3 P100 BN100LB4**	305
27.7	943	2.1	51.0	30000	**A553_51.0 S3 M3LB4**	300	**A553_51.0 P100 BN100LB4**	301
29.2	923	0.9	48.3	12700	**A412_48.3 S3 M3LB4**	292	**A412_48.3 P100 BN100LB4**	293
31	861	1.0	45.1	12600	**A412_45.1 S3 M3LB4**	292	**A412_45.1 P100 BN100LB4**	293
31	836	3.3	45.2	30000	**A603_45.2 S3 M3LB4**	304	**A603_45.2 P100 BN100LB4**	305
31	833	1.8	45.0	16500	**A503_45.0 S3 M3LB4**	296	**A503_45.0 P100 BN100LB4**	297
34	757	2.0	40.9	16300	**A503_40.9 S3 M3LB4**	296	**A503_40.9 P100 BN100LB4**	297
35	746	2.7	40.3	30000	**A553_40.3 S3 M3LB4**	300	**A553_40.3 P100 BN100LB4**	301
38	700	0.9	36.6	8550	**A352_36.6 S3 M3LB4**	288	**A352_36.6 P100 BN100LB4**	289
39	686	1.1	35.9	12200	**A412_35.9 S3 M3LB4**	292	**A412_35.9 P100 BN100LB4**	293
40	659	2.3	35.6	16000	**A503_35.6 S3 M3LB4**	296	**A503_35.6 P100 BN100LB4**	297
43	634	0.9	33.2	8520	**A352_33.2 S3 M3LB4**	288	**A352_33.2 P100 BN100LB4**	289
44	599	2.5	32.4	15700	**A503_32.4 S3 M3LB4**	296	**A503_32.4 P100 BN100LB4**	297
50	543	1.1	28.4	8420	**A352_28.4 S3 M3LB4**	288	**A352_28.4 P100 BN100LB4**	289
50	541	1.3	28.3	11700	**A412_28.3 S3 M3LB4**	292	**A412_28.3 P100 BN100LB4**	293
53	489	3.1	26.4	15100	**A503_26.4 S3 M3LB4**	296	**A503_26.4 P100 BN100LB4**	297
55	491	1.2	25.7	8330	**A352_25.7 S3 M3LB4**	288	**A352_25.7 P100 BN100LB4**	289
59	445	3.4	24.0	14800	**A503_24.0 S3 M3LB4**	296	**A503_24.0 P100 BN100LB4**	297
62	435	0.9	22.8	4610	**A302_22.8 S3 M3LB4**	284	**A302_22.8 P100 BN100LB4**	285
62	433	1.6	22.7	11200	**A412_22.7 S3 M3LB4**	292	**A412_22.7 P100 BN100LB4**	293
63	430	1.4	22.5	8190	**A352_22.5 S3 M3LB4**	288	**A352_22.5 P100 BN100LB4**	289
67	400	3.0	20.9	15500	**A502_20.9 S3 M3LB4**	296	**A502_20.9 P100 BN100LB4**	297
69	392	1.0	20.5	4620	**A302_20.5 S3 M3LB4**	284	**A302_20.5 P100 BN100LB4**	285
69	390	1.5	20.4	8080	**A352_20.4 S3 M3LB4**	288	**A352_20.4 P100 BN100LB4**	289
78	344	1.2	18.0	4600	**A302_18.0 S3 M3LB4**	284	**A302_18.0 P100 BN100LB4**	285
79	339	1.9	17.8	10600	**A412_17.8 S3 M3LB4**	292	**A412_17.8 P100 BN100LB4**	293
83	324	1.9	17.0	7830	**A352_17.0 S3 M3LB4**	288	**A352_17.0 P100 BN100LB4**	289
86	312	1.2	16.3	4580	**A302_16.3 S3 M3LB4**	284	**A302_16.3 P100 BN100LB4**	285
88	308	2.0	16.1	10400	**A412_16.1 S3 M3LB4**	292	**A412_16.1 P100 BN100LB4**	293
91	296	2.0	15.5	7700	**A352_15.5 S3 M3LB4**	288	**A352_15.5 P100 BN100LB4**	289
100	269	0.9	14.1	2650	**A202_14.1 S3 M3LB4**	280	**A202_14.1 P100 BN100LB4**	281
102	263	2.2	13.8	9990	**A412_13.8 S3 M3LB4**	292	**A412_13.8 P100 BN100LB4**	293
104	259	1.4	13.6	4500	**A302_13.6 S3 M3LB4**	284	**A302_13.6 P100 BN100LB4**	285
108	250	2.4	13.1	7450	**A352_13.1 S3 M3LB4**	288	**A352_13.1 P100 BN100LB4**	289
118	229	0.9	12.0	2670	**A202_12.0 S3 M3LB4**	280	**A202_12.0 P100 BN100LB4**	281
120	225	1.3	11.8	4400	**A302_11.8 S3 M3LB4**	284	**A302_11.8 P100 BN100LB4**	285
120	225	1.8	11.8	7410	**A352_11.8 S3 M3LB4**	288	**A352_11.8 P100 BN100LB4**	289
120	224	2.5	11.7	9580	**A412_11.7 S3 M3LB4**	292	**A412_11.7 P100 BN100LB4**	293
124	218	1.5	23.1	2690	**A202_23.1 S3 M3LA2**	280	**A202_23.1 P100 BN100L2**	281
133	203	2.0	10.6	7230	**A352_10.6 S3 M3LB4**	288	**A352_10.6 P100 BN100LB4**	289
135	200	1.7	10.5	4350	**A302_10.5 S3 M3LB4**	284	**A302_10.5 P100 BN100LB4**	285
136	198	1.1	10.3	2690	**A202_10.3 S3 M3LB4**	280	**A202_10.3 P100 BN100LB4**	281
139	194	2.8	10.1	9230	**A412_10.1 S3 M3LB4**	292	**A412_10.1 P100 BN100LB4**	293

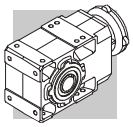

3.0 kW

n_2 min-1	M_2 Nm	S	i	R_{n2} N			IEC	
150	179	1.2	9.4	2670	**A202_9.4 S3 M3LB4**	280	**A202_9.4 P100 BN100LB4**	281
151	178	1.7	9.3	4240	**A302_9.3 S3 M3LB4**	284	**A302_9.3 P100 BN100LB4**	285
151	178	2.2	9.3	7000	**A352_9.3 S3 M3LB4**	288	**A352_9.3 P100 BN100LB4**	289
153	176	3.1	9.2	8980	**A412_9.2 S3 M3LB4**	292	**A412_9.2 P100 BN100LB4**	293
167	162	1.9	8.5	4170	**A302_8.5 S3 M3LB4**	284	**A302_8.5 P100 BN100LB4**	285
167	162	2.4	8.5	6840	**A352_8.5 S3 M3LB4**	288	**A352_8.5 P100 BN100LB4**	289
168	160	1.3	8.4	2650	**A202_8.4 S3 M3LB4**	280	**A202_8.4 P100 BN100LB4**	281
169	159	3.5	8.3	8740	**A412_8.3 S3 M3LB4**	292	**A412_8.3 P100 BN100LB4**	293
193	139	1.5	7.3	2620	**A202_7.3 S3 M3LB4**	280	**A202_7.3 P100 BN100LB4**	281
196	138	1.0	7.2	2220	**A102_7.2 S3 M3LB4**	276	**A102_7.2 P100 BN100LB4**	277
201	134	2.2	7.0	4030	**A302_7.0 S3 M3LB4**	284	**A302_7.0 P100 BN100LB4**	285
201	134	2.8	7.0	6520	**A352_7.0 S3 M3LB4**	288	**A352_7.0 P100 BN100LB4**	289
216	125	1.7	6.5	2590	**A202_6.5 S3 M3LB4**	280	**A202_6.5 P100 BN100LB4**	281
220	123	2.4	6.4	3950	**A302_6.4 S3 M3LB4**	284	**A302_6.4 P100 BN100LB4**	285
220	123	2.9	6.4	6360	**A352_6.4 S3 M3LB4**	288	**A352_6.4 P100 BN100LB4**	289
223	121	1.2	6.3	2640	**A102_6.3 S3 M3LB4**	276	**A102_6.3 P100 BN100LB4**	277
243	111	2.7	11.8	3870	**A302_11.8 S3 M3LA2**	284	**A302_11.8 P100 BN100L2**	285
258	104	1.3	5.5	2200	**A102_5.5 S3 M3LB4**	276	**A102_5.5 P100 BN100LB4**	277
260	103	2.9	5.4	3810	**A302_5.4 S3 M3LB4**	284	**A302_5.4 P100 BN100LB4**	285
260	103	3.3	5.4	6070	**A352_5.4 S3 M3LB4**	288	**A352_5.4 P100 BN100LB4**	289
263	102	2.1	5.4	2520	**A202_5.4 S3 M3LB4**	280	**A202_5.4 P100 BN100LB4**	281
277	97	1.9	10.3	2500	**A202_10.3 S3 M3LA2**	280	**A202_10.3 P100 BN100L2**	281
307	88	3.4	9.3	3670	**A302_9.3 S3 M3LA2**	284	**A302_9.3 P100 BN100L2**	285
342	79	2.7	8.4	2410	**A202_8.4 S3 M3LA2**	280	**A202_8.4 P100 BN100L2**	281
397	68	2.1	7.2	2090	**A102_7.2 S3 M3LA2**	276	**A102_7.2 P100 BN100L2**	277
451	60	2.3	6.3	2430	**A102_6.3 S3 M3LA2**	276	**A102_6.3 P100 BN100L2**	277
523	51	2.6	5.5	1990	**A102_5.5 S3 M3LA2**	276	**A102_5.5 P100 BN100L2**	277

4.0 kW

n_2 min-1	M_2 Nm	S	i	R_{n2} N			IEC	
2.3	14616	1.0	601.6	75000	**A904_601.6 S3 M3LC4**	314	**A904_601.6 P112 BN112M4**	315
2.5	13492	1.0	555.3	75000	**A904_555.3 S3 M3LC4**	314	**A904_555.3 P112 BN112M4**	315
2.9	11823	1.2	486.6	75000	**A904_486.6 S3 M3LC4**	314	**A904_486.6 P112 BN112M4**	315
3.1	10913	1.3	449.2	75000	**A904_449.2 S3 M3LC4**	314	**A904_449.2 P112 BN112M4**	315
3.6	9365	1.5	385.4	75000	**A904_385.4 S3 M3LC4**	314	**A904_385.4 P112 BN112M4**	315
3.7	9317	0.9	383.5	65000	**A804_383.5 S3 M3LC4**	311	**A804_383.5 P112 BN112M4**	312
3.9	8645	1.6	355.8	75000	**A904_355.8 S3 M3LC4**	314	**A904_355.8 P112 BN112M4**	315
4.0	8600	0.9	354.0	65000	**A804_354.0 S3 M3LC4**	311	**A804_354.0 P112 BN112M4**	312
4.6	7408	1.9	304.9	75000	**A904_304.9 S3 M3LC4**	314	**A904_304.9 P112 BN112M4**	315
4.7	7299	1.1	300.4	65000	**A804_300.4 S3 M3LC4**	311	**A804_300.4 P112 BN112M4**	312
5.0	6838	2.0	281.4	75000	**A904_281.4 S3 M3LC4**	314	**A904_281.4 P112 BN112M4**	315
5.0	6737	1.2	277.3	65000	**A804_277.3 S3 M3LC4**	311	**A804_277.3 P112 BN112M4**	312
5.9	5797	0.9	238.6	50000	**A704_238.6 S3 M3LC4**	308	**A704_238.6 P112 BN112M4**	309
6.0	5652	1.4	232.6	65000	**A804_232.6 S3 M3LC4**	311	**A804_232.6 P112 BN112M4**	312
6.2	5502	2.5	226.4	75000	**A904_226.4 S3 M3LC4**	314	**A904_226.4 P112 BN112M4**	315
6.4	5352	0.9	220.3	50000	**A704_220.3 S3 M3LC4**	308	**A704_220.3 P112 BN112M4**	309
6.5	5217	1.5	214.7	65000	**A804_214.7 S3 M3LC4**	311	**A804_214.7 P112 BN112M4**	312

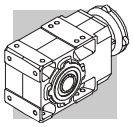

4.0 kW

n_2 min-1	M_2 Nm	S	i	R_{n2} N			IEC	
6.7	5078	2.8	209.0	75000	**A904_209.0 S3 M3LC4**	314	**A904_209.0 P112 BN112M4**	315
7.6	4468	1.1	183.9	50000	**A704_183.9 S3 M3LC4**	308	**A704_183.9 P112 BN112M4**	309
7.8	4373	3.2	180.0	75000	**A904_180.0 S3 M3LC4**	314	**A904_180.0 P112 BN112M4**	315
8.2	4162	1.9	171.3	65000	**A804_171.3 S3 M3LC4**	311	**A804_171.3 P112 BN112M4**	312
8.2	4125	1.2	169.8	50000	**A704_169.8 S3 M3LC4**	308	**A704_169.8 P112 BN112M4**	309
8.4	4036	3.5	166.1	75000	**A904_166.1 S3 M3LC4**	314	**A904_166.1 P112 BN112M4**	315
8.9	3895	2.1	156.8	65000	**A803_156.8 S3 M3LC4**	311	**A803_156.8 P112 BN112M4**	312
9.1	3818	1.1	153.7	50000	**A703_153.7 S3 M3LC4**	308	**A703_153.7 P112 BN112M4**	309
9.7	3596	2.2	144.7	65000	**A803_144.7 S3 M3LC4**	311	**A803_144.7 P112 BN112M4**	312
9.9	3524	1.4	141.9	50000	**A703_141.9 S3 M3LC4**	308	**A703_141.9 P112 BN112M4**	309
10.7	3246	1.5	130.7	50000	**A703_130.7 S3 M3LC4**	308	**A703_130.7 P112 BN112M4**	309
11.1	3121	2.6	125.6	65000	**A803_125.6 S3 M3LC4**	311	**A803_125.6 P112 BN112M4**	312
11.4	3056	0.9	123.0	30000	**A603_123.0 S3 M3LC4**	304	**A603_123.0 P112 BN112M4**	305
11.6	2996	1.7	120.6	50000	**A703_120.6 S3 M3LC4**	308	**A703_120.6 P112 BN112M4**	309
12.1	2881	2.8	116.0	65000	**A803_116.0 S3 M3LC4**	311	**A803_116.0 P112 BN112M4**	312
13.0	2678	1.0	107.8	30000	**A603_107.8 S3 M3LC4**	304	**A603_107.8 P112 BN112M4**	305
13.4	2590	1.9	104.2	50000	**A703_104.2 S3 M3LC4**	308	**A703_104.2 P112 BN112M4**	309
13.5	2584	3.1	104.0	65000	**A803_104.0 S3 M3LC4**	311	**A803_104.0 P112 BN112M4**	312
14.1	2472	1.1	99.5	30000	**A603_99.5 S3 M3LC4**	304	**A603_99.5 P112 BN112M4**	305
14.6	2390	2.1	96.2	50000	**A703_96.2 S3 M3LC4**	308	**A703_96.2 P112 BN112M4**	309
14.6	2386	3.4	96.0	65000	**A803_96.0 S3 M3LC4**	311	**A803_96.0 P112 BN112M4**	312
16.2	2146	1.3	86.4	30000	**A603_86.4 S3 M3LC4**	304	**A603_86.4 P112 BN112M4**	305
16.3	2135	2.3	85.9	50000	**A703_85.9 S3 M3LC4**	308	**A703_85.9 P112 BN112M4**	309
17.6	1980	1.4	79.7	30000	**A603_79.7 S3 M3LC4**	304	**A603_79.7 P112 BN112M4**	305
17.6	1976	1.0	79.5	30000	**A553_79.5 S3 M3LC4**	300	**A553_79.5 P112 BN112M4**	301
17.6	1971	2.5	79.3	50000	**A703_79.3 S3 M3LC4**	308	**A703_79.3 P112 BN112M4**	309
19.3	1802	2.8	72.5	50000	**A703_72.5 S3 M3LC4**	308	**A703_72.5 P112 BN112M4**	309
19.9	1749	1.6	70.4	30000	**A603_70.4 S3 M3LC4**	304	**A603_70.4 P112 BN112M4**	305
20.9	1663	3.0	66.9	50000	**A703_66.9 S3 M3LC4**	308	**A703_66.9 P112 BN112M4**	309
21.5	1615	1.7	65.0	30000	**A603_65.0 S3 M3LC4**	304	**A603_65.0 P112 BN112M4**	305
21.8	1598	1.3	64.3	30000	**A553_64.3 S3 M3LC4**	300	**A553_64.3 P112 BN112M4**	301
21.9	1587	0.9	63.9	14700	**A503_63.9 S3 M3LC4**	296	**A503_63.9 P112 BN112M4**	297
24.6	1411	1.1	56.8	14800	**A503_56.8 S3 M3LC4**	296	**A503_56.8 P112 BN112M4**	297
25.2	1381	2.0	55.6	30000	**A603_55.6 S3 M3LC4**	304	**A603_55.6 P112 BN112M4**	305
27.1	1284	1.2	51.7	14900	**A503_51.7 S3 M3LC4**	296	**A503_51.7 P112 BN112M4**	297
27.3	1275	2.2	51.3	30000	**A603_51.3 S3 M3LC4**	304	**A603_51.3 P112 BN112M4**	305
28	1266	1.6	51.0	30000	**A553_51.0 S3 M3LC4**	300	**A553_51.0 P112 BN112M4**	301
31	1123	2.5	45.2	30000	**A603_45.2 S3 M3LC4**	304	**A603_45.2 P112 BN112M4**	305
31	1118	1.3	45.0	14900	**A503_45.0 S3 M3LC4**	296	**A503_45.0 P112 BN112M4**	297
34	1036	2.7	41.7	30000	**A603_41.7 S3 M3LC4**	304	**A603_41.7 P112 BN112M4**	305
34	1017	1.5	40.9	14800	**A503_40.9 S3 M3LC4**	296	**A503_40.9 P112 BN112M4**	297
35	1001	2.0	40.3	30000	**A553_40.3 S3 M3LC4**	300	**A553_40.3 P112 BN112M4**	301
39	884	1.7	35.6	14700	**A503_35.6 S3 M3LC4**	296	**A503_35.6 P112 BN112M4**	297
41	852	3.3	34.3	30000	**A603_34.3 S3 M3LC4**	304	**A603_34.3 P112 BN112M4**	305
43	804	1.9	32.4	14500	**A503_32.4 S3 M3LC4**	296	**A503_32.4 P112 BN112M4**	297
47	744	2.7	29.9	30000	**A553_29.9 S3 M3LC4**	300	**A553_29.9 P112 BN112M4**	301
49	727	1.0	28.3	10900	**A412_28.3 S3 M3LC4**	292	**A412_28.3 P112 BN112M4**	293
53	657	2.3	26.4	14100	**A503_26.4 S3 M3LC4**	296	**A503_26.4 P112 BN112M4**	297
55	659	0.9	25.7	7420	**A352_25.7 S3 M3LC4**	288	**A352_25.7 P112 BN112M4**	289
58	597	2.5	24.0	13900	**A503_24.0 S3 M3LC4**	296	**A503_24.0 P112 BN112M4**	297
59	591	3.3	23.8	30000	**A553_23.8 S3 M3LC4**	300	**A553_23.8 P112 BN112M4**	301

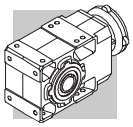

4.0 kW

n_2 min-1	M_2 Nm	S	i	R_{n2} N			IEC	
62	582	1.2	22.7	10500	**A412_22.7 S3 M3LC4**	292	**A412_22.7 P112 BN112M4**	293
62	577	1.0	22.5	7400	**A352_22.5 S3 M3LC4**	288	**A352_22.5 P112 BN112M4**	289
67	537	2.2	20.9	15100	**A502_20.9 S3 M3LC4**	296	**A502_20.9 P112 BN112M4**	297
69	524	1.1	20.4	7360	**A352_20.4 S3 M3LC4**	288	**A352_20.4 P112 BN112M4**	289
78	462	0.9	18.0	3930	**A302_18.0 S3 M3LC4**	284	**A302_18.0 P112 BN112M4**	285
79	456	1.4	17.8	10100	**A412_17.8 S3 M3LC4**	292	**A412_17.8 P112 BN112M4**	293
83	435	1.4	17.0	7240	**A352_17.0 S3 M3LC4**	288	**A352_17.0 P112 BN112M4**	289
84	425	2.8	16.6	14200	**A502_16.6 S3 M3LC4**	296	**A502_16.6 P112 BN112M4**	297
86	419	0.9	16.3	3970	**A302_16.3 S3 M3LC4**	284	**A302_16.3 P112 BN112M4**	285
87	413	1.5	16.1	9940	**A412_16.1 S3 M3LC4**	292	**A412_16.1 P112 BN112M4**	293
90	397	1.5	15.5	7160	**A352_15.5 S3 M3LC4**	288	**A352_15.5 P112 BN112M4**	289
102	353	1.7	13.8	9610	**A412_13.8 S3 M3LC4**	292	**A412_13.8 P112 BN112M4**	293
103	348	1.1	13.6	4000	**A302_13.6 S3 M3LC4**	284	**A302_13.6 P112 BN112M4**	285
107	336	3.3	13.1	13300	**A502_13.1 S3 M3LC4**	296	**A502_13.1 P112 BN112M4**	297
107	335	1.8	13.1	7000	**A352_13.1 S3 M3LC4**	288	**A352_13.1 P112 BN112M4**	289
119	302	1.0	11.8	3960	**A302_11.8 S3 M3LC4**	284	**A302_11.8 P112 BN112M4**	285
119	302	1.3	11.8	7050	**A352_11.8 S3 M3LC4**	288	**A352_11.8 P112 BN112M4**	289
119	301	1.8	11.7	9260	**A412_11.7 S3 M3LC4**	292	**A412_11.7 P112 BN112M4**	293
126	285	1.2	22.8	3980	**A302_22.8 S3 M3LB2**	284	**A302_22.8 P112 BN112M2**	285
132	273	1.5	10.6	6910	**A352_10.6 S3 M3LC4**	288	**A352_10.6 P112 BN112M4**	289
134	268	1.3	10.5	3970	**A302_10.5 S3 M3LC4**	284	**A302_10.5 P112 BN112M4**	285
138	260	2.1	10.1	8960	**A412_10.1 S3 M3LC4**	292	**A412_10.1 P112 BN112M4**	293
150	239	1.3	9.3	3900	**A302_9.3 S3 M3LC4**	284	**A302_9.3 P112 BN112M4**	285
150	239	1.7	9.3	6730	**A352_9.3 S3 M3LC4**	288	**A352_9.3 P112 BN112M4**	289
152	236	2.3	9.2	8740	**A412_9.2 S3 M3LC4**	292	**A412_9.2 P112 BN112M4**	293
165	217	1.4	8.5	3860	**A302_8.5 S3 M3LC4**	284	**A302_8.5 P112 BN112M4**	285
165	217	1.8	8.5	6590	**A352_8.5 S3 M3LC4**	288	**A352_8.5 P112 BN112M4**	289
167	215	1.0	8.4	2300	**A202_8.4 S3 M3LC4**	280	**A202_8.4 P112 BN112M4**	281
168	214	2.6	8.3	8520	**A412_8.3 S3 M3LC4**	292	**A412_8.3 P112 BN112M4**	293
192	187	1.1	7.3	2310	**A202_7.3 S3 M3LC4**	280	**A202_7.3 P112 BN112M4**	281
197	183	3.0	7.1	8180	**A412_7.1 S3 M3LC4**	292	**A412_7.1 P112 BN112M4**	293
199	180	1.7	7.0	3770	**A302_7.0 S3 M3LC4**	284	**A302_7.0 P112 BN112M4**	285
199	180	2.1	7.0	6310	**A352_7.0 S3 M3LC4**	288	**A352_7.0 P112 BN112M4**	289
214	168	1.3	6.5	2310	**A202_6.5 S3 M3LC4**	280	**A202_6.5 P112 BN112M4**	281
218	165	1.8	6.4	3720	**A302_6.4 S3 M3LC4**	284	**A302_6.4 P112 BN112M4**	285
218	165	2.1	6.4	6180	**A352_6.4 S3 M3LC4**	288	**A352_6.4 P112 BN112M4**	289
256	140	1.0	5.5	1910	**A102_5.5 S3 M3LC4**	276	**A102_5.5 P112 BN112M4**	277
259	139	2.2	5.4	3610	**A302_5.4 S3 M3LC4**	284	**A302_5.4 P112 BN112M4**	285
259	139	2.4	5.4	5920	**A352_5.4 S3 M3LC4**	288	**A352_5.4 P112 BN112M4**	289
262	137	1.5	5.4	2300	**A202_5.4 S3 M3LC4**	280	**A202_5.4 P112 BN112M4**	281
270	133	3.0	10.6	5850	**A352_10.6 S3 M3LB2**	288	**A352_10.6 P112 BN112M2**	289
308	117	3.4	9.3	5650	**A352_9.3 S3 M3LB2**	288	**A352_9.3 P112 BN112M2**	289
343	105	2.1	8.4	2230	**A202_8.4 S3 M3LB2**	280	**A202_8.4 P112 BN112M2**	281
409	88	3.4	7.0	3280	**A302_7.0 S3 M3LB2**	284	**A302_7.0 P112 BN112M2**	285
453	79	1.7	6.3	2240	**A102_6.3 S3 M3LB2**	276	**A102_6.3 P112 BN112M2**	277
536	67	2.8	5.4	2080	**A202_5.4 S3 M3LB2**	280	**A202_5.4 P112 BN112M2**	281

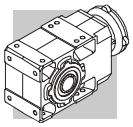

5.5 kW

n_2 min-1	M_2 Nm	S	i	R_{n2} N			IEC	
3.0	15805	0.9	486.6	75000	**A904_486.6 S4 M4SA4**	314	**A904_486.6 P132 BN132S4**	315
3.2	14589	1.0	449.2	75000	**A904_449.2 S4 M4SA4**	314	**A904_449.2 P132 BN132S4**	315
3.7	12519	1.1	385.4	75000	**A904_385.4 S4 M4SA4**	314	**A904_385.4 P132 BN132S4**	315
4.0	11556	1.2	355.8	75000	**A904_355.8 S4 M4SA4**	314	**A904_355.8 P132 BN132S4**	315
4.7	9903	1.4	304.9	75000	**A904_304.9 S4 M4SA4**	314	**A904_304.9 P132 BN132S4**	315
5.1	9141	1.5	281.4	75000	**A904_281.4 S4 M4SA4**	314	**A904_281.4 P132 BN132S4**	315
5.2	9006	0.9	277.3	65000	**A804_277.3 S4 M4SA4**	311	**A804_277.3 P132 BN132S4**	312
6.2	7556	1.1	232.6	65000	**A804_232.6 S4 M4SA4**	311	**A804_232.6 P132 BN132S4**	312
6.4	7354	1.9	226.4	75000	**A904_226.4 S4 M4SA4**	314	**A904_226.4 P132 BN132S4**	315
6.7	6975	1.1	214.7	65000	**A804_214.7 S4 M4SA4**	311	**A804_214.7 P132 BN132S4**	312
6.9	6789	2.1	209.0	75000	**A904_209.0 S4 M4SA4**	314	**A904_209.0 P132 BN132S4**	315
8.0	5846	2.4	180.0	75000	**A904_180.0 S4 M4SA4**	314	**A904_180.0 P132 BN132S4**	315
8.4	5564	1.4	171.3	65000	**A804_171.3 S4 M4SA4**	311	**A804_171.3 P132 BN132S4**	312
8.5	5514	0.9	169.8	50000	**A704_169.8 S4 M4SA4**	308	**A704_169.8 P132 BN132S4**	309
8.7	5396	2.6	166.1	75000	**A904_166.1 S4 M4SA4**	314	**A904_166.1 P132 BN132S4**	315
9.2	5207	1.5	156.8	65000	**A803_156.8 S4 M4SA4**	311	**A803_156.8 P132 BN132S4**	312
9.5	5015	2.8	151.0	75000	**A903_151.0 S4 M4SA4**	314	**A903_151.0 P132 BN132S4**	315
9.9	4807	1.7	144.7	65000	**A803_144.7 S4 M4SA4**	311	**A803_144.7 P132 BN132S4**	312
10.2	4711	1.1	141.9	50000	**A703_141.9 S4 M4SA4**	308	**A703_141.9 P132 BN132S4**	309
10.3	4629	2.8	139.4	75000	**A903_139.4 S4 M4SA4**	314	**A903_139.4 P132 BN132S4**	315
11.0	4339	1.2	130.7	50000	**A703_130.7 S4 M4SA4**	308	**A703_130.7 P132 BN132S4**	309
11.4	4206	3.1	126.6	75000	**A903_126.6 S4 M4SA4**	314	**A903_126.6 P132 BN132S4**	315
11.5	4172	1.9	125.6	65000	**A803_125.6 S4 M4SA4**	311	**A803_125.6 P132 BN132S4**	312
11.9	4006	1.2	120.6	50000	**A703_120.6 S4 M4SA4**	308	**A703_120.6 P132 BN132S4**	309
12.4	3851	2.1	116.0	65000	**A803_116.0 S4 M4SA4**	311	**A803_116.0 P132 BN132S4**	312
13.8	3462	1.4	104.2	50000	**A703_104.2 S4 M4SA4**	308	**A703_104.2 P132 BN132S4**	309
13.8	3455	2.3	104.0	65000	**A803_104.0 S4 M4SA4**	311	**A803_104.0 P132 BN132S4**	312
15.0	3195	1.6	96.2	50000	**A703_96.2 S4 M4SA4**	308	**A703_96.2 P132 BN132S4**	309
15.0	3189	2.5	96.0	65000	**A803_96.0 S4 M4SA4**	311	**A803_96.0 P132 BN132S4**	312
16.1	2962	2.7	89.2	65000	**A803_89.2 S4 M4SA4**	311	**A803_89.2 P132 BN132S4**	312
16.7	2868	1.0	86.4	30000	**A603_86.4 S4 M4SA4**	304	**A603_86.4 P132 BN132S4**	305
16.8	2854	1.8	85.9	50000	**A703_85.9 S4 M4SA4**	308	**A703_85.9 P132 BN132S4**	309
17.5	2734	2.9	82.3	65000	**A803_82.3 S4 M4SA4**	311	**A803_82.3 P132 BN132S4**	312
18.1	2648	1.1	79.7	30000	**A603_79.7 S4 M4SA4**	304	**A603_79.7 P132 BN132S4**	305
18.2	2635	1.9	79.3	50000	**A703_79.3 S4 M4SA4**	308	**A703_79.3 P132 BN132S4**	309
19.9	2408	2.1	72.5	50000	**A703_72.5 S4 M4SA4**	308	**A703_72.5 P132 BN132S4**	309
19.9	2403	3.3	72.4	65000	**A803_72.4 S4 M4SA4**	311	**A803_72.4 P132 BN132S4**	312
20.5	2338	1.2	70.4	30000	**A603_70.4 S4 M4SA4**	304	**A603_70.4 P132 BN132S4**	305
21.5	2223	2.2	66.9	50000	**A703_66.9 S4 M4SA4**	308	**A703_66.9 P132 BN132S4**	309
22.2	2158	1.3	65.0	30000	**A603_65.0 S4 M4SA4**	304	**A603_65.0 P132 BN132S4**	305
22.4	2136	0.9	64.3	30000	**A553_64.3 S4 M4SA4**	300	**A553_64.3 P132 BN132S4**	301
25.0	1915	2.6	57.7	50000	**A703_57.7 S4 M4SA4**	308	**A703_57.7 P132 BN132S4**	309
25.9	1847	1.5	55.6	30000	**A603_55.6 S4 M4SA4**	304	**A603_55.6 P132 BN132S4**	305
27.1	1768	2.8	53.2	50000	**A703_53.2 S4 M4SA4**	308	**A703_53.2 P132 BN132S4**	309
28.1	1705	1.6	51.3	30000	**A603_51.3 S4 M4SA4**	304	**A603_51.3 P132 BN132S4**	305
28.3	1692	1.2	51.0	30000	**A553_51.0 S4 M4SA4**	300	**A553_51.0 P132 BN132S4**	301
29.4	1627	3.1	49.0	50000	**A703_49.0 S4 M4SA4**	308	**A703_49.0 P132 BN132S4**	309
32	1502	3.2	45.2	50000	**A703_45.2 S4 M4SA4**	308	**A703_45.2 P132 BN132S4**	309
32	1501	1.9	45.2	30000	**A603_45.2 S4 M4SA4**	304	**A603_45.2 P132 BN132S4**	305
32	1495	1.0	45.0	12400	**A503_45.0 S4 M4SA4**	296	**A503_45.0 P132 BN132S4**	297
35	1385	2.0	41.7	30000	**A603_41.7 S4 M4SA4**	304	**A603_41.7 P132 BN132S4**	305

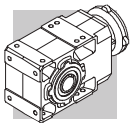

5.5 kW

n_2 min-1	M_2 Nm	S	i	R_{n2} N			IEC	
35	1360	1.1	40.9	12600	**A503_40.9 S4 M4SA4**	296	**A503_40.9 P132 BN132S4**	297
36	1338	1.5	40.3	30000	**A553_40.3 S4 M4SA4**	300	**A553_40.3 P132 BN132S4**	301
40	1182	1.3	35.6	12700	**A503_35.6 S4 M4SA4**	296	**A503_35.6 P132 BN132S4**	297
42	1139	2.5	34.3	30000	**A603_34.3 S4 M4SA4**	304	**A603_34.3 P132 BN132S4**	305
44	1075	1.4	32.4	12700	**A503_32.4 S4 M4SA4**	296	**A503_32.4 P132 BN132S4**	297
45	1051	2.7	31.7	30000	**A603_31.7 S4 M4SA4**	304	**A603_31.7 P132 BN132S4**	305
48	994	2.0	29.9	30000	**A553_29.9 S4 M4SA4**	300	**A553_29.9 P132 BN132S4**	301
52	925	3.0	27.9	30000	**A603_27.9 S4 M4SA4**	304	**A603_27.9 P132 BN132S4**	305
54	878	1.7	26.4	12600	**A503_26.4 S4 M4SA4**	296	**A503_26.4 P132 BN132S4**	297
56	854	3.3	25.7	30000	**A603_25.7 S4 M4SA4**	304	**A603_25.7 P132 BN132S4**	305
60	799	1.9	24.0	12500	**A503_24.0 S4 M4SA4**	296	**A503_24.0 P132 BN132S4**	297
61	790	2.5	23.8	29800	**A553_23.8 S4 M4SA4**	300	**A553_23.8 P132 BN132S4**	301
69	718	1.7	20.9	14400	**A502_20.9 S4 M4SA4**	296	**A502_20.9 P132 BN132S4**	297
70	706	2.8	20.6	30000	**A602_20.6 S4 M4SA4**	304	**A602_20.6 P132 BN132S4**	305
75	660	2.7	19.2	29300	**A552_19.2 S4 M4SA4**	300	**A552_19.2 P132 BN132S4**	301
81	609	1.0	17.8	9280	**A412_17.8 S4 M4SA4**	292	**A412_17.8 P132 BN132S4**	293
86	574	3.5	16.7	30000	**A602_16.7 S4 M4SA4**	304	**A602_16.7 P132 BN132S4**	305
87	568	2.1	16.6	13600	**A502_16.6 S4 M4SA4**	296	**A502_16.6 P132 BN132S4**	297
89	552	1.1	16.1	9160	**A412_16.1 S4 M4SA4**	292	**A412_16.1 P132 BN132S4**	293
92	538	3.3	15.7	27700	**A552_15.7 S4 M4SA4**	300	**A552_15.7 P132 BN132S4**	301
105	472	1.2	13.8	8940	**A412_13.8 S4 M4SA4**	292	**A412_13.8 P132 BN132S4**	293
110	450	2.4	13.1	12800	**A502_13.1 S4 M4SA4**	296	**A502_13.1 P132 BN132S4**	297
122	404	1.0	11.8	6450	**A352_11.8 S4 M4SA4**	288	**A352_11.8 P132 BN132S4**	289
123	403	1.4	11.7	8670	**A412_11.7 S4 M4SA4**	292	**A412_11.7 P132 BN132S4**	293
135	365	1.1	10.6	6360	**A352_10.6 S4 M4SA4**	288	**A352_10.6 P132 BN132S4**	289
142	348	1.5	10.1	8440	**A412_10.1 S4 M4SA4**	292	**A412_10.1 P132 BN132S4**	293
148	334	3.0	9.7	11800	**A502_9.7 S4 M4SA4**	296	**A502_9.7 P132 BN132S4**	297
155	319	1.3	9.3	6240	**A352_9.3 S4 M4SA4**	288	**A352_9.3 P132 BN132S4**	289
157	316	1.7	9.2	8250	**A412_9.2 S4 M4SA4**	292	**A412_9.2 P132 BN132S4**	293
170	290	1.3	8.5	6140	**A352_8.5 S4 M4SA4**	288	**A352_8.5 P132 BN132S4**	289
173	286	1.9	8.3	8080	**A412_8.3 S4 M4SA4**	292	**A412_8.3 P132 BN132S4**	293
202	244	2.3	7.1	7790	**A412_7.1 S4 M4SA4**	292	**A412_7.1 P132 BN132S4**	293
205	241	1.5	7.0	5930	**A352_7.0 S4 M4SA4**	288	**A352_7.0 P132 BN132S4**	289
225	220	1.6	6.4	5820	**A352_6.4 S4 M4SA4**	288	**A352_6.4 P132 BN132S4**	289
246	201	2.7	11.7	7430	**A412_11.7 S4 M4SA2**	292	**A412_11.7 P132 BN132SA2**	293
266	186	1.8	5.4	5610	**A352_5.4 S4 M4SA4**	288	**A352_5.4 P132 BN132S4**	289
275	180	3.1	5.2	7230	**A412_5.2 S4 M4SA4**	292	**A412_5.2 P132 BN132S4**	293
285	173	2.5	10.1	7170	**A412_10.1 S4 M4SA2**	292	**A412_10.1 P132 BN132SA2**	293
411	120	3.1	7.0	5060	**A352_7.0 S4 M4SA2**	288	**A352_7.0 P132 BN132SA2**	289

7.5 kW

n_2 min-1	M_2 Nm	S	i	R_{n2} N			IEC	
4.0	15759	0.9	355.8	75000	**A904_355.8 S4 M4LA4**	314	**A904_355.8 P132 BN132MA4**	315
4.7	13504	1.0	304.9	75000	**A904_304.9 S4 M4LA4**	314	**A904_304.9 P132 BN132MA4**	315
5.1	12465	1.1	281.4	75000	**A904_281.4 S4 M4LA4**	314	**A904_281.4 P132 BN132MA4**	315
6.4	10029	1.4	226.4	75000	**A904_226.4 S4 M4LA4**	314	**A904_226.4 P132 BN132MA4**	315
6.9	9257	1.5	209.0	75000	**A904_209.0 S4 M4LA4**	314	**A904_209.0 P132 BN132MA4**	315

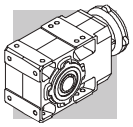

7.5 kW

n_2 min-1	M_2 Nm	S	i	R_{n2} N			IEC	
8.0	7971	1.8	180.0	75000	**A904_180.0 S4 M4LA4**	314	**A904_180.0 P132 BN132MA4**	315
8.4	7587	1.1	171.3	65000	**A804_171.3 S4 M4LA4**	311	**A804_171.3 P132 BN132MA4**	312
8.7	7358	1.9	166.1	75000	**A904_166.1 S4 M4LA4**	314	**A904_166.1 P132 BN132MA4**	315
9.2	7101	1.1	156.8	65000	**A803_156.8 S4 M4LA4**	311	**A803_156.8 P132 BN132MA4**	312
9.5	6839	2.0	151.0	75000	**A903_151.0 S4 M4LA4**	314	**A903_151.0 P132 BN132MA4**	315
9.9	6555	1.2	144.7	65000	**A803_144.7 S4 M4LA4**	311	**A803_144.7 P132 BN132MA4**	312
10.3	6313	2.0	139.4	75000	**A903_139.4 S4 M4LA4**	314	**A903_139.4 P132 BN132MA4**	315
11.4	5735	2.3	126.6	75000	**A903_126.6 S4 M4LA4**	314	**A903_126.6 P132 BN132MA4**	315
11.5	5689	1.4	125.6	65000	**A803_125.6 S4 M4LA4**	311	**A803_125.6 P132 BN132MA4**	312
11.9	5462	0.9	120.6	50000	**A703_120.6 S4 M4LA4**	308	**A703_120.6 P132 BN132MA4**	309
12.3	5294	2.6	116.9	75000	**A903_116.9 S4 M4LA4**	314	**A903_116.9 P132 BN132MA4**	315
12.4	5251	1.5	116.0	65000	**A803_116.0 S4 M4LA4**	311	**A803_116.0 P132 BN132MA4**	312
13.5	4838	2.9	106.8	75000	**A903_106.8 S4 M4LA4**	314	**A903_106.8 P132 BN132MA4**	315
13.8	4721	1.1	104.2	50000	**A703_104.2 S4 M4LA4**	308	**A703_104.2 P132 BN132MA4**	309
13.8	4711	1.7	104.0	65000	**A803_104.0 S4 M4LA4**	311	**A803_104.0 P132 BN132MA4**	312
14.6	4465	3.1	98.6	75000	**A903_98.6 S4 M4LA4**	314	**A903_98.6 P132 BN132MA4**	315
15.0	4357	1.1	96.2	50000	**A703_96.2 S4 M4LA4**	308	**A703_96.2 P132 BN132MA4**	309
15.0	4349	1.8	96.0	65000	**A803_96.0 S4 M4LA4**	311	**A803_96.0 P132 BN132MA4**	312
16.1	4039	2.0	89.2	65000	**A803_89.2 S4 M4LA4**	311	**A803_89.2 P132 BN132MA4**	312
16.8	3892	1.3	85.9	50000	**A703_85.9 S4 M4LA4**	308	**A703_85.9 P132 BN132MA4**	309
17.5	3728	2.1	82.3	65000	**A803_82.3 S4 M4LA4**	311	**A803_82.3 P132 BN132MA4**	312
18.2	3593	1.4	79.3	50000	**A703_79.3 S4 M4LA4**	308	**A703_79.3 P132 BN132MA4**	309
19.9	3284	1.5	72.5	50000	**A703_72.5 S4 M4LA4**	308	**A703_72.5 P132 BN132MA4**	309
19.9	3277	2.4	72.4	65000	**A803_72.4 S4 M4LA4**	311	**A803_72.4 P132 BN132MA4**	312
20.5	3188	0.9	70.4	30000	**A603_70.4 S4 M4LA4**	304	**A603_70.4 P132 BN132MA4**	305
21.5	3032	1.6	66.9	50000	**A703_66.9 S4 M4LA4**	308	**A703_66.9 P132 BN132MA4**	309
21.6	3025	2.6	66.8	65000	**A803_66.8 S4 M4LA4**	311	**A803_66.8 P132 BN132MA4**	312
22.2	2943	1.0	65.0	30000	**A603_65.0 S4 M4LA4**	304	**A603_65.0 P132 BN132MA4**	305
24.1	2707	3.0	59.8	63800	**A803_59.8 S4 M4LA4**	311	**A803_59.8 P132 BN132MA4**	312
25.0	2612	1.9	57.7	50000	**A703_57.7 S4 M4LA4**	308	**A703_57.7 P132 BN132MA4**	309
25.9	2518	1.1	55.6	30000	**A603_55.6 S4 M4LA4**	304	**A603_55.6 P132 BN132MA4**	305
26.1	2499	3.2	55.2	62600	**A803_55.2 S4 M4LA4**	311	**A803_55.2 P132 BN132MA4**	312
27.1	2411	2.1	53.2	50000	**A703_53.2 S4 M4LA4**	308	**A703_53.2 P132 BN132MA4**	309
28.1	2324	1.2	51.3	30000	**A603_51.3 S4 M4LA4**	304	**A603_51.3 P132 BN132MA4**	305
29.4	2219	2.3	49.0	50000	**A703_49.0 S4 M4LA4**	308	**A703_49.0 P132 BN132MA4**	309
32	2048	2.3	45.2	50000	**A703_45.2 S4 M4LA4**	308	**A703_45.2 P132 BN132MA4**	309
32	2046	1.4	45.2	30000	**A603_45.2 S4 M4LA4**	304	**A603_45.2 P132 BN132MA4**	305
35	1889	1.5	41.7	30000	**A603_41.7 S4 M4LA4**	304	**A603_41.7 P132 BN132MA4**	305
36	1825	1.1	40.3	30000	**A553_40.3 S4 M4LA4**	300	**A553_40.3 P132 BN132MA4**	301
38	1738	2.8	38.4	50000	**A703_38.4 S4 M4LA4**	308	**A703_38.4 P132 BN132MA4**	309
40	1612	0.9	35.6	10100	**A503_35.6 S4 M4LA4**	296	**A503_35.6 P132 BN132MA4**	297
41	1605	2.8	35.4	50000	**A703_35.4 S4 M4LA4**	308	**A703_35.4 P132 BN132MA4**	309
42	1553	1.8	34.3	30000	**A603_34.3 S4 M4LA4**	304	**A603_34.3 P132 BN132MA4**	305
44	1466	1.0	32.4	10300	**A503_32.4 S4 M4LA4**	296	**A503_32.4 P132 BN132MA4**	297
45	1434	2.0	31.7	30000	**A603_31.7 S4 M4LA4**	304	**A603_31.7 P132 BN132MA4**	305
48	1355	1.5	29.9	30000	**A553_29.9 S4 M4LA4**	300	**A553_29.9 P132 BN132MA4**	301
52	1261	2.2	27.9	30000	**A603_27.9 S4 M4LA4**	304	**A603_27.9 P132 BN132MA4**	305
54	1197	1.3	26.4	10700	**A503_26.4 S4 M4LA4**	296	**A503_26.4 P132 BN132MA4**	297
56	1164	2.4	25.7	30000	**A603_25.7 S4 M4LA4**	304	**A603_25.7 P132 BN132MA4**	305
60	1089	1.4	24.0	10800	**A503_24.0 S4 M4LA4**	296	**A503_24.0 P132 BN132MA4**	297
61	1077	1.8	23.8	28800	**A553_23.8 S4 M4LA4**	300	**A553_23.8 P132 BN132MA4**	301

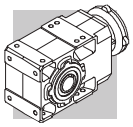

7.5 kW

n_2 min-1	M_2 Nm	S	i	R_{n2} N			IEC	
69	979	1.2	20.9	13700	**A502_20.9 S4 M4LA4**	296	**A502_20.9 P132 BN132MA4**	297
70	963	2.1	20.6	30000	**A602_20.6 S4 M4LA4**	304	**A602_20.6 P132 BN132MA4**	305
75	900	2.0	19.2	28800	**A552_19.2 S4 M4LA4**	300	**A552_19.2 P132 BN132MA4**	301
86	783	2.6	16.7	30000	**A602_16.7 S4 M4LA4**	304	**A602_16.7 P132 BN132MA4**	305
87	775	1.5	16.6	13000	**A502_16.6 S4 M4LA4**	296	**A502_16.6 P132 BN132MA4**	297
92	734	2.5	15.7	27300	**A552_15.7 S4 M4LA4**	300	**A552_15.7 P132 BN132MA4**	301
105	644	0.9	13.8	8130	**A412_13.8 S4 M4LA4**	292	**A412_13.8 P132 BN132MA4**	293
110	613	1.8	13.1	12300	**A502_13.1 S4 M4LA4**	296	**A502_13.1 P132 BN132MA4**	297
110	612	2.9	13.1	26100	**A552_13.1 S4 M4LA4**	300	**A552_13.1 P132 BN132MA4**	301
113	594	3.4	12.7	30000	**A602_12.7 S4 M4LA4**	304	**A602_12.7 P132 BN132MA4**	305
123	549	1.0	11.7	7970	**A412_11.7 S4 M4LA4**	292	**A412_11.7 P132 BN132MA4**	293
142	474	1.1	10.1	7850	**A412_10.1 S4 M4LA4**	292	**A412_10.1 P132 BN132MA4**	293
148	455	2.2	9.7	11500	**A502_9.7 S4 M4LA4**	296	**A502_9.7 P132 BN132MA4**	297
155	436	0.9	9.3	5650	**A352_9.3 S4 M4LA4**	288	**A352_9.3 P132 BN132MA4**	289
157	430	1.3	9.2	7710	**A412_9.2 S4 M4LA4**	292	**A412_9.2 P132 BN132MA4**	293
170	396	1.0	8.5	5600	**A352_8.5 S4 M4LA4**	288	**A352_8.5 P132 BN132MA4**	289
173	390	1.4	8.3	7590	**A412_8.3 S4 M4LA4**	292	**A412_8.3 P132 BN132MA4**	293
186	362	2.6	7.7	10800	**A502_7.7 S4 M4LA4**	296	**A502_7.7 P132 BN132MA4**	297
202	333	1.7	7.1	7370	**A412_7.1 S4 M4LA4**	292	**A412_7.1 P132 BN132MA4**	293
205	329	1.1	7.0	5490	**A352_7.0 S4 M4LA4**	288	**A352_7.0 P132 BN132MA4**	289
225	300	1.2	6.4	5420	**A352_6.4 S4 M4LA4**	288	**A352_6.4 P132 BN132MA4**	289
266	253	1.3	5.4	5270	**A352_5.4 S4 M4LA4**	288	**A352_5.4 P132 BN132MA4**	289
275	245	2.2	5.2	6920	**A412_5.2 S4 M4LA4**	292	**A412_5.2 P132 BN132MA4**	293
315	214	2.5	9.2	6710	**A412_9.2 S4 M4SB2**	292	**A412_9.2 P132 BN132SB2**	293
348	194	2.6	8.3	6550	**A412_8.3 S4 M4SB2**	292	**A412_8.3 P132 BN132SB2**	293
413	163	2.3	7.0	4830	**A352_7.0 S4 M4SB2**	288	**A352_7.0 P132 BN132SB2**	289
536	126	2.7	5.4	4550	**A352_5.4 S4 M4SB2**	288	**A352_5.4 P132 BN132SB2**	289

9.2 kW

n_2 min-1	M_2 Nm	S	i	R_{n2} N			IEC	
5.1	15291	0.9	281.4	75000	**A904_281.4 S4 M4LB4**	314	**A904_281.4 P132 BN132MB4**	315
6.4	12302	1.1	226.4	75000	**A904_226.4 S4 M4LB4**	314	**A904_226.4 P132 BN132MB4**	315
6.9	11356	1.2	209.0	75000	**A904_209.0 S4 M4LB4**	314	**A904_209.0 P132 BN132MB4**	315
8.0	9778	1.4	180.0	75000	**A904_180.0 S4 M4LB4**	314	**A904_180.0 P132 BN132MB4**	315
8.4	9307	0.9	171.3	65000	**A804_171.3 S4 M4LB4**	311	**A804_171.3 P132 BN132MB4**	312
8.7	9026	1.6	166.1	75000	**A904_166.1 S4 M4LB4**	314	**A904_166.1 P132 BN132MB4**	315
9.2	8711	0.9	156.8	65000	**A803_156.8 S4 M4LB4**	311	**A803_156.8 P132 BN132MB4**	312
9.5	8389	1.6	151.0	75000	**A903_151.0 S4 M4LB4**	314	**A903_151.0 P132 BN132MB4**	315
9.9	8040	1.0	144.7	65000	**A803_144.7 S4 M4LB4**	311	**A803_144.7 P132 BN132MB4**	312
10.3	7744	1.6	139.4	75000	**A903_139.4 S4 M4LB4**	314	**A903_139.4 P132 BN132MB4**	315
11.4	7035	1.9	126.6	75000	**A903_126.6 S4 M4LB4**	314	**A903_126.6 P132 BN132MB4**	315
11.5	6978	1.1	125.6	65000	**A803_125.6 S4 M4LB4**	311	**A803_125.6 P132 BN132MB4**	312
12.3	6494	2.2	116.9	75000	**A903_116.9 S4 M4LB4**	314	**A903_116.9 P132 BN132MB4**	315
12.4	6442	1.2	116.0	65000	**A803_116.0 S4 M4LB4**	311	**A803_116.0 P132 BN132MB4**	312
13.5	5934	2.4	106.8	75000	**A903_106.8 S4 M4LB4**	314	**A903_106.8 P132 BN132MB4**	315
13.8	5779	1.4	104.0	65000	**A803_104.0 S4 M4LB4**	311	**A803_104.0 P132 BN132MB4**	312
14.6	5478	2.6	98.6	75000	**A903_98.6 S4 M4LB4**	314	**A903_98.6 P132 BN132MB4**	315

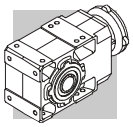

9.2 kW

n_2 min-1	M_2 Nm	S	i	R_{n2} N			IEC	
15.0	5345	0.9	96.2	50000	**A703_96.2 S4 M4LB4**	308	**A703_96.2 P132 BN132MB4**	309
15.0	5335	1.5	96.0	65000	**A803_96.0 S4 M4LB4**	311	**A803_96.0 P132 BN132MB4**	312
16.1	4954	1.6	89.2	65000	**A803_89.2 S4 M4LB4**	311	**A803_89.2 P132 BN132MB4**	312
16.5	4837	2.9	87.1	75000	**A903_87.1 S4 M4LB4**	314	**A903_87.1 P132 BN132MB4**	315
16.8	4774	1.0	85.9	50000	**A703_85.9 S4 M4LB4**	308	**A703_85.9 P132 BN132MB4**	309
17.5	4573	1.7	82.3	65000	**A803_82.3 S4 M4LB4**	311	**A803_82.3 P132 BN132MB4**	312
17.9	4465	3.1	80.4	75000	**A903_80.4 S4 M4LB4**	314	**A903_80.4 P132 BN132MB4**	315
18.2	4407	1.1	79.3	50000	**A703_79.3 S4 M4LB4**	308	**A703_79.3 P132 BN132MB4**	309
19.3	4137	3.4	74.5	75000	**A903_74.5 S4 M4LB4**	314	**A903_74.5 P132 BN132MB4**	315
19.9	4029	1.2	72.5	50000	**A703_72.5 S4 M4LB4**	308	**A703_72.5 P132 BN132MB4**	309
19.9	4020	2.0	72.4	65000	**A803_72.4 S4 M4LB4**	311	**A803_72.4 P132 BN132MB4**	312
21.5	3719	1.3	66.9	50000	**A703_66.9 S4 M4LB4**	308	**A703_66.9 P132 BN132MB4**	309
21.6	3711	2.2	66.8	63800	**A803_66.8 S4 M4LB4**	311	**A803_66.8 P132 BN132MB4**	312
24.1	3321	2.4	59.8	62400	**A803_59.8 S4 M4LB4**	311	**A803_59.8 P132 BN132MB4**	312
25.0	3204	1.6	57.7	50000	**A703_57.7 S4 M4LB4**	308	**A703_57.7 P132 BN132MB4**	309
25.9	3089	0.9	55.6	30000	**A603_55.6 S4 M4LB4**	304	**A603_55.6 P132 BN132MB4**	305
26.1	3065	2.6	55.2	61300	**A803_55.2 S4 M4LB4**	311	**A803_55.2 P132 BN132MB4**	312
27.1	2957	1.7	53.2	50000	**A703_53.2 S4 M4LB4**	308	**A703_53.2 P132 BN132MB4**	309
28.1	2851	1.0	51.3	30000	**A603_51.3 S4 M4LB4**	304	**A603_51.3 P132 BN132MB4**	305
29.4	2722	1.8	49.0	50000	**A703_49.0 S4 M4LB4**	308	**A703_49.0 P132 BN132MB4**	309
30	2677	3.0	48.2	59500	**A803_48.2 S4 M4LB4**	311	**A803_48.2 P132 BN132MB4**	312
32	2513	1.9	45.2	50000	**A703_45.2 S4 M4LB4**	308	**A703_45.2 P132 BN132MB4**	309
32	2510	1.1	45.2	30000	**A603_45.2 S4 M4LB4**	304	**A603_45.2 P132 BN132MB4**	305
32	2471	3.0	44.5	58400	**A803_44.5 S4 M4LB4**	311	**A803_44.5 P132 BN132MB4**	312
35	2317	1.2	41.7	30000	**A603_41.7 S4 M4LB4**	304	**A603_41.7 P132 BN132MB4**	305
38	2132	2.3	38.4	50000	**A703_38.4 S4 M4LB4**	308	**A703_38.4 P132 BN132MB4**	309
41	1968	2.3	35.4	50000	**A703_35.4 S4 M4LB4**	308	**A703_35.4 P132 BN132MB4**	309
42	1905	1.5	34.3	30000	**A603_34.3 S4 M4LB4**	304	**A603_34.3 P132 BN132MB4**	305
45	1759	1.6	31.7	30000	**A603_31.7 S4 M4LB4**	304	**A603_31.7 P132 BN132MB4**	305
48	1663	1.2	29.9	29100	**A553_29.9 S4 M4LB4**	300	**A553_29.9 P132 BN132MB4**	301
52	1547	1.8	27.9	30000	**A603_27.9 S4 M4LB4**	304	**A603_27.9 P132 BN132MB4**	305
54	1469	1.0	26.4	9130	**A503_26.4 S4 M4LB4**	296	**A503_26.4 P132 BN132MB4**	297
56	1428	2.0	25.7	30000	**A603_25.7 S4 M4LB4**	304	**A603_25.7 P132 BN132MB4**	305
60	1336	1.1	24.0	9370	**A503_24.0 S4 M4LB4**	296	**A503_24.0 P132 BN132MB4**	297
61	1322	1.5	23.8	27900	**A553_23.8 S4 M4LB4**	300	**A553_23.8 P132 BN132MB4**	301
68	1183	3.4	21.3	46000	**A703_21.3 S4 M4LB4**	308	**A703_21.3 P132 BN132MB4**	309
69	1200	1.0	20.9	13000	**A502_20.9 S4 M4LB4**	296	**A502_20.9 P132 BN132MB4**	297
70	1182	1.7	20.6	30000	**A602_20.6 S4 M4LB4**	304	**A602_20.6 P132 BN132MB4**	305
73	1092	3.4	19.7	45100	**A703_19.7 S4 M4LB4**	308	**A703_19.7 P132 BN132MB4**	309
75	1104	1.6	19.2	28400	**A552_19.2 S4 M4LB4**	300	**A552_19.2 P132 BN132MB4**	301
86	960	2.1	16.7	30000	**A602_16.7 S4 M4LB4**	304	**A602_16.7 P132 BN132MB4**	305
87	951	1.3	16.6	12500	**A502_16.6 S4 M4LB4**	296	**A502_16.6 P132 BN132MB4**	297
92	900	2.0	15.7	27000	**A552_15.7 S4 M4LB4**	300	**A552_15.7 P132 BN132MB4**	301
110	752	1.5	13.1	11900	**A502_13.1 S4 M4LB4**	296	**A502_13.1 P132 BN132MB4**	297
110	750	2.4	13.1	25800	**A552_13.1 S4 M4LB4**	300	**A552_13.1 P132 BN132MB4**	301
113	729	2.7	12.7	30000	**A602_12.7 S4 M4LB4**	304	**A602_12.7 P132 BN132MB4**	305
123	650	2.5	23.8	24100	**A553_23.8 S4 M4LA2**	300	**A553_23.8 P132 BN132M2**	301
139	594	3.0	10.4	24200	**A552_10.4 S4 M4LB4**	300	**A552_10.4 P132 BN132MB4**	301
140	592	3.4	10.3	30000	**A602_10.3 S4 M4LB4**	304	**A602_10.3 P132 BN132MB4**	305
142	581	0.9	10.1	7340	**A412_10.1 S4 M4LB4**	292	**A412_10.1 P132 BN132MB4**	293
148	559	1.8	9.7	11200	**A502_9.7 S4 M4LB4**	296	**A502_9.7 P132 BN132MB4**	297

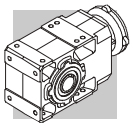

9.2 kW

n_2 min-1	M_2 Nm	S	i	R_{n2} N			IEC	
157	528	1.0	9.2	7250	**A412_9.2 S4 M4LB4**	292	**A412_9.2 P132 BN132MB4**	293
173	478	1.2	8.3	7170	**A412_8.3 S4 M4LB4**	292	**A412_8.3 P132 BN132MB4**	293
186	444	2.1	7.7	10600	**A502_7.7 S4 M4LB4**	296	**A502_7.7 P132 BN132MB4**	297
202	409	1.3	7.1	7020	**A412_7.1 S4 M4LB4**	292	**A412_7.1 P132 BN132MB4**	293
205	403	0.9	7.0	5110	**A352_7.0 S4 M4LB4**	288	**A352_7.0 P132 BN132MB4**	289
225	368	1.0	6.4	5070	**A352_6.4 S4 M4LB4**	288	**A352_6.4 P132 BN132MB4**	289
266	311	1.1	5.4	4980	**A352_5.4 S4 M4LB4**	288	**A352_5.4 P132 BN132MB4**	289
275	301	1.8	5.2	6660	**A412_5.2 S4 M4LB4**	292	**A412_5.2 P132 BN132MB4**	293
319	259	2.0	9.2	6480	**A412_9.2 S4 M4LA2**	292	**A412_9.2 P132 BN132M2**	293
379	218	3.4	7.7	8780	**A502_7.7 S4 M4LA2**	296	**A502_7.7 P132 BN132M2**	297
541	153	2.2	5.4	4410	**A352_5.4 S4 M4LA2**	288	**A352_5.4 P132 BN132M2**	289
559	148	3.0	5.2	5690	**A412_5.2 S4 M4LA2**	292	**A412_5.2 P132 BN132M2**	293

11 kW

n_2 min-1	M_2 Nm	S	i	R_{n2} N			IEC	
6.4	14709	1.0	226.4	75000	**A904_226.4 S4 M4LC4**	314	**A904_226.4 P160 BN160MR4**	315
6.9	13577	1.0	209.0	75000	**A904_209.0 S4 M4LC4**	314	**A904_209.0 P160 BN160MR4**	315
8.0	11691	1.2	180.0	75000	**A904_180.0 S4 M4LC4**	314	**A904_180.0 P160 BN160MR4**	315
8.7	10792	1.3	166.1	75000	**A904_166.1 S4 M4LC4**	314	**A904_166.1 P160 BN160MR4**	315
9.5	10030	1.4	151.0	75000	**A903_151.0 S4 M4LC4**	314	**A903_151.0 P160 BN160MR4**	315
10.3	9259	1.4	139.4	75000	**A903_139.4 S4 M4LC4**	314	**A903_139.4 P160 BN160MR4**	315
11.4	8412	1.6	126.6	75000	**A903_126.6 S4 M4LC4**	314	**A903_126.6 P160 BN160MR4**	315
11.5	8344	1.0	125.6	65000	**A803_125.6 S4 M4LC4**	311	**A803_125.6 P160 BN160MR4**	312
12.3	7765	1.8	116.9	75000	**A903_116.9 S4 M4LC4**	314	**A903_116.9 P160 BN160MR4**	315
12.4	7702	1.0	116.0	65000	**A803_116.0 S4 M4LC4**	311	**A803_116.0 P160 BN160MR4**	312
13.5	7095	2.0	106.8	75000	**A903_106.8 S4 M4LC4**	314	**A903_106.8 P160 BN160MR4**	315
13.8	6910	1.2	104.0	65000	**A803_104.0 S4 M4LC4**	311	**A803_104.0 P160 BN160MR4**	312
14.6	6549	2.1	98.6	75000	**A903_98.6 S4 M4LC4**	314	**A903_98.6 P160 BN160MR4**	315
15.0	6378	1.3	96.0	65000	**A803_96.0 S4 M4LC4**	311	**A803_96.0 P160 BN160MR4**	312
16.1	5923	1.4	89.2	65000	**A803_89.2 S4 M4LC4**	311	**A803_89.2 P160 BN160MR4**	312
16.5	5783	2.4	87.1	75000	**A903_87.1 S4 M4LC4**	314	**A903_87.1 P160 BN160MR4**	315
17.5	5468	1.5	82.3	64500	**A803_82.3 S4 M4LC4**	311	**A803_82.3 P160 BN160MR4**	312
17.9	5338	2.6	80.4	75000	**A903_80.4 S4 M4LC4**	314	**A903_80.4 P160 BN160MR4**	315
18.2	5269	0.9	79.3	50000	**A703_79.3 S4 M4LC4**	308	**A703_79.3 P160 BN160MR4**	309
19.3	4947	2.8	74.5	75000	**A903_74.5 S4 M4LC4**	314	**A903_74.5 P160 BN160MR4**	315
19.9	4817	1.0	72.5	50000	**A703_72.5 S4 M4LC4**	308	**A703_72.5 P160 BN160MR4**	309
19.9	4807	1.7	72.4	63200	**A803_72.4 S4 M4LC4**	311	**A803_72.4 P160 BN160MR4**	312
20.9	4566	3.1	68.8	75000	**A903_68.8 S4 M4LC4**	314	**A903_68.8 P160 BN160MR4**	315
21.5	4446	1.1	66.9	50000	**A703_66.9 S4 M4LC4**	308	**A703_66.9 P160 BN160MR4**	309
21.6	4437	1.8	66.8	62200	**A803_66.8 S4 M4LC4**	311	**A803_66.8 P160 BN160MR4**	312
24.1	3971	2.0	59.8	60900	**A803_59.8 S4 M4LC4**	311	**A803_59.8 P160 BN160MR4**	312
24.2	3960	3.5	59.6	75000	**A903_59.6 S4 M4LC4**	314	**A903_59.6 P160 BN160MR4**	315
25.0	3830	1.3	57.7	50000	**A703_57.7 S4 M4LC4**	308	**A703_57.7 P160 BN160MR4**	309
26.1	3665	2.2	55.2	59900	**A803_55.2 S4 M4LC4**	311	**A803_55.2 P160 BN160MR4**	312
27.1	3536	1.4	53.2	50000	**A703_53.2 S4 M4LC4**	308	**A703_53.2 P160 BN160MR4**	309
29.4	3255	1.5	49.0	50000	**A703_49.0 S4 M4LC4**	308	**A703_49.0 P160 BN160MR4**	309
30	3200	2.5	48.2	58300	**A803_48.2 S4 M4LC4**	311	**A803_48.2 P160 BN160MR4**	312

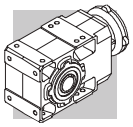

11 kW

n_2 min-1	M_2 Nm	S	i	R_{n2} N			IEC	
32	3004	1.6	45.2	50000	**A703_45.2 S4 M4LC4**	308	**A703_45.2 P160 BN160MR4**	309
32	3001	0.9	45.2	30000	**A603_45.2 S4 M4LC4**	304	**A603_45.2 P160 BN160MR4**	305
32	2954	2.5	44.5	57300	**A803_44.5 S4 M4LC4**	311	**A803_44.5 P160 BN160MR4**	312
35	2771	1.0	41.7	30000	**A603_41.7 S4 M4LC4**	304	**A603_41.7 P160 BN160MR4**	305
37	2557	3.0	38.5	55500			**A803_38.5 P160 BN160MR4**	312
38	2549	1.9	38.4	50000	**A703_38.4 S4 M4LC4**	308	**A703_38.4 P160 BN160MR4**	309
41	2360	3.0	35.5	54500			**A803_35.5 P160 BN160MR4**	312
41	2353	1.9	35.4	50000	**A703_35.4 S4 M4LC4**	308	**A703_35.4 P160 BN160MR4**	309
42	2278	1.2	34.3	30000	**A603_34.3 S4 M4LC4**	304	**A603_34.3 P160 BN160MR4**	305
45	2103	1.3	31.7	30000	**A603_31.7 S4 M4LC4**	304	**A603_31.7 P160 BN160MR4**	305
47	2031	3.2	30.6	52600			**A803_30.6 P160 BN160MR4**	312
48	1999	2.3	30.1	49400			**A703_30.1 P160 BN160MR4**	309
51	1875	3.5	28.2	51600			**A803_28.2 P160 BN160MR4**	312
52	1850	1.5	27.9	30000	**A603_27.9 S4 M4LC4**	304	**A603_27.9 P160 BN160MR4**	305
52	1845	2.3	27.8	48500			**A703_27.8 P160 BN160MR4**	309
56	1708	1.6	25.7	30000	**A603_25.7 S4 M4LC4**	304	**A603_25.7 P160 BN160MR4**	305
60	1597	0.9	24.0	7800	**A503_24.0 S4 M4LC4**	296	**A503_24.0 P160 BN160MR4**	297
61	1562	2.8	23.5	46600			**A703_23.5 P160 BN160MR4**	309
68	1415	2.8	21.3	45500	**A703_21.3 S4 M4LC4**	308	**A703_21.3 P160 BN160MR4**	309
70	1413	1.4	20.6	30000	**A602_20.6 S4 M4LC4**	304	**A602_20.6 P160 BN160MR4**	305
73	1306	2.8	19.7	44500	**A703_19.7 S4 M4LC4**	308	**A703_19.7 P160 BN160MR4**	309
75	1319	1.4	19.2	27900	**A552_19.2 S4 M4LC4**	300	**A552_19.2 P160 BN160MR4**	301
86	1148	1.7	16.7	30000	**A602_16.7 S4 M4LC4**	304	**A602_16.7 P160 BN160MR4**	305
87	1137	1.1	16.6	12000	**A502_16.6 S4 M4LC4**	296	**A502_16.6 P160 BN160MR4**	297
92	1076	1.7	15.7	26600	**A552_15.7 S4 M4LC4**	300	**A552_15.7 P160 BN160MR4**	301
110	899	1.2	13.1	11500	**A502_13.1 S4 M4LC4**	296	**A502_13.1 P160 BN160MR4**	297
110	897	2.0	13.1	25400	**A552_13.1 S4 M4LC4**	300	**A552_13.1 P160 BN160MR4**	301
113	872	2.3	12.7	30000	**A602_12.7 S4 M4LC4**	304	**A602_12.7 P160 BN160MR4**	305
123	779	2.1	23.8	23600	**A553_23.8 S4 M4LC2**	300	**A553_23.8 P160 BN160MR2**	301
139	710	2.5	10.4	24000	**A552_10.4 S4 M4LC4**	300	**A552_10.4 P160 BN160MR4**	301
140	708	2.8	10.3	30000	**A602_10.3 S4 M4LC4**	304	**A602_10.3 P160 BN160MR4**	305
148	668	1.5	9.7	10800	**A502_9.7 S4 M4LC4**	296	**A502_9.7 P160 BN160MR4**	297
170	581	3.1	8.5	22800	**A552_8.5 S4 M4LC4**	300	**A552_8.5 P160 BN160MR4**	301
186	531	1.8	7.7	10300	**A502_7.7 S4 M4LC4**	296	**A502_7.7 P160 BN160MR4**	297
202	489	1.1	7.1	6640	**A412_7.1 S4 M4LC4**	292		
223	443	2.0	13.1	9920	**A502_13.1 S4 M4LC2**	296	**A502_13.1 P160 BN160MR2**	297
248	399	1.0	11.8	4690	**A352_11.8 S4 M4LC2**	288		
275	360	1.1	10.6	4660	**A352_10.6 S4 M4LC2**	288		
317	311	1.7	9.2	6230	**A412_9.2 S4 M4LC2**	292		
377	262	2.8	7.7	8650	**A502_7.7 S4 M4LC2**	296	**A502_7.7 P160 BN160MR2**	297
416	238	1.6	7.0	4440	**A352_7.0 S4 M4LC2**	288		
456	217	1.6	6.4	4380	**A352_6.4 S4 M4LC2**	288		
539	183	1.9	5.4	4250	**A352_5.4 S4 M4LC2**	288		

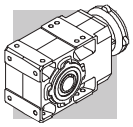

15 kW

n_2 min^{-1}	M_2 Nm	S	i	R_{n2} N			IEC	
8.1	15724	0.9	180.0	75000			**A904_180.0 P160 BN160L4**	315
8.8	14514	1.0	166.1	75000			**A904_166.1 P160 BN160L4**	315
9.7	13490	1.0	151.0	75000	**A903_151.0 S5 M5SB4**	314	**A903_151.0 P160 BN160L4**	315
10.5	12452	1.0	139.4	75000	**A903_139.4 S5 M5SB4**	314	**A903_139.4 P160 BN160L4**	315
11.5	11314	1.2	126.6	75000	**A903_126.6 S5 M5SB4**	314	**A903_126.6 P160 BN160L4**	315
12.5	10443	1.3	116.9	75000	**A903_116.9 S5 M5SB4**	314	**A903_116.9 P160 BN160L4**	315
13.7	9543	1.5	106.8	75000	**A903_106.8 S5 M5SB4**	314	**A903_106.8 P160 BN160L4**	315
14.8	8808	1.6	98.6	75000	**A903_98.6 S5 M5SB4**	314	**A903_98.6 P160 BN160L4**	315
15.2	8578	0.9	96.0	60600	**A803_96.0 S5 M5SB4**	311	**A803_96.0 P160 BN160L4**	312
16.4	7967	1.0	89.2	60400	**A803_89.2 S5 M5SB4**	311	**A803_89.2 P160 BN160L4**	312
16.8	7778	1.8	87.1	75000	**A903_87.1 S5 M5SB4**	314	**A903_87.1 P160 BN160L4**	315
17.7	7354	1.1	82.3	59800	**A803_82.3 S5 M5SB4**	311	**A803_82.3 P160 BN160L4**	312
18.2	7180	1.9	80.4	75000	**A903_80.4 S5 M5SB4**	314	**A903_80.4 P160 BN160L4**	315
19.6	6654	2.1	74.5	75000	**A903_74.5 S5 M5SB4**	314	**A903_74.5 P160 BN160L4**	315
20.2	6465	1.2	72.4	59100	**A803_72.4 S5 M5SB4**	311	**A803_72.4 P160 BN160L4**	312
21.2	6142	2.3	68.8	75000	**A903_68.8 S5 M5SB4**	314	**A903_68.8 P160 BN160L4**	315
21.9	5968	1.3	66.8	58300	**A803_66.8 S5 M5SB4**	311	**A803_66.8 P160 BN160L4**	312
24.4	5340	1.5	59.8	57500	**A803_59.8 S5 M5SB4**	311	**A803_59.8 P160 BN160L4**	312
24.5	5326	2.6	59.6	75000	**A903_59.6 S5 M5SB4**	314	**A903_59.6 P160 BN160L4**	315
25.3	5152	1.0	57.7	50000	**A703_57.7 S5 M5SB4**	308	**A703_57.7 P160 BN160L4**	309
26.5	4930	1.6	55.2	56700	**A803_55.2 S5 M5SB4**	311	**A803_55.2 P160 BN160L4**	312
26.5	4916	2.8	55.0	75000	**A903_55.0 S5 M5SB4**	314	**A903_55.0 P160 BN160L4**	315
27.4	4755	1.1	53.2	50000	**A703_53.2 S5 M5SB4**	308	**A703_53.2 P160 BN160L4**	309
29.8	4377	1.1	49.0	50000	**A703_49.0 S5 M5SB4**	308	**A703_49.0 P160 BN160L4**	309
30	4315	3.2	48.3	74900			**A903_48.3 P160 BN160L4**	315
30	4304	1.9	48.2	55500	**A803_48.2 S5 M5SB4**	311	**A803_48.2 P160 BN160L4**	312
32	4041	1.2	45.2	50000	**A703_45.2 S5 M5SB4**	308	**A703_45.2 P160 BN160L4**	309
33	3983	3.5	44.6	73500			**A903_44.6 P160 BN160L4**	315
33	3973	1.9	44.5	54700	**A803_44.5 S5 M5SB4**	311	**A803_44.5 P160 BN160L4**	312
38	3439	2.2	38.5	53200			**A803_38.5 P160 BN160L4**	312
38	3429	1.4	38.4	49900	**A703_38.4 S5 M5SB4**	308	**A703_38.4 P160 BN160L4**	309
41	3175	2.2	35.5	52300			**A803_35.5 P160 BN160L4**	312
41	3165	1.4	35.4	49100	**A703_35.4 S5 M5SB4**	308	**A703_35.4 P160 BN160L4**	309
43	3064	0.9	34.3	30000	**A603_34.3 S5 M5SB4**	304	**A603_34.3 P160 BN160L4**	305
46	2828	1.0	31.7	30000	**A603_31.7 S5 M5SB4**	304	**A603_31.7 P160 BN160L4**	305
48	2731	2.4	30.6	50800			**A803_30.6 P160 BN160L4**	312
49	2689	1.7	30.1	47600			**A703_30.1 P160 BN160L4**	309
52	2521	2.6	28.2	49900			**A803_28.2 P160 BN160L4**	312
52	2488	1.1	27.9	30000	**A603_27.9 S5 M5SB4**	304	**A603_27.9 P160 BN160L4**	305
53	2482	1.7	27.8	46700			**A703_27.8 P160 BN160L4**	309
57	2297	1.2	25.7	30000	**A603_25.7 S5 M5SB4**	304	**A603_25.7 P160 BN160L4**	305
61	2125	0.9	23.8	25000	**A553_23.8 S5 M5SB4**	300	**A553_23.8 P160 BN160L4**	301
62	2101	2.0	23.5	45100			**A703_23.5 P160 BN160L4**	309
69	1903	2.1	21.3	44100	**A703_21.3 S5 M5SB4**	308	**A703_21.3 P160 BN160L4**	309
70	1871	3.5	20.9	46600	**A803_20.9 S5 M5SB4**	311	**A803_20.9 P160 BN160L4**	312
71	1900	1.1	20.6	30000	**A602_20.6 S5 M5SB4**	304	**A602_20.6 P160 BN160L4**	305
74	1757	2.1	19.7	43300	**A703_19.7 S5 M5SB4**	308	**A703_19.7 P160 BN160L4**	309
75	1728	3.5	19.3	45700	**A803_19.3 S5 M5SB4**	311	**A803_19.3 P160 BN160L4**	312
76	1775	1.0	19.2	26800	**A552_19.2 S5 M5SB4**	300	**A552_19.2 P160 BN160L4**	301
87	1544	1.3	16.7	30000	**A602_16.7 S5 M5SB4**	304	**A602_16.7 P160 BN160L4**	305
87	1491	2.7	16.7	41600	**A703_16.7 S5 M5SB4**	308	**A703_16.7 P160 BN160L4**	309

Bonfiglioli Riduttori

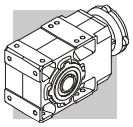

15 kW

n_2 min-1	M_2 Nm	S	i	R_{n2} N			IEC	
93	1447	1.2	15.7	25700	**A552_15.7 S5 M5SB4**	300	**A552_15.7 P160 BN160L4**	301
95	1376	2.7	15.4	40800	**A703_15.4 S5 M5SB4**	308	**A703_15.4 P160 BN160L4**	309
111	1209	0.9	13.1	10500			**A502_13.1 P160 BN160L4**	297
112	1207	1.5	13.1	24700	**A552_13.1 S5 M5SB4**	300	**A552_13.1 P160 BN160L4**	301
112	1169	3.3	13.1	39200			**A703_13.1 P160 BN160L4**	309
115	1172	1.7	12.7	30000	**A602_12.7 S5 M5SB4**	304	**A602_12.7 P160 BN160L4**	305
121	1079	3.3	12.1	38400			**A703_12.1 P160 BN160L4**	309
123	1059	1.5	23.8	22600	**A553_23.8 S5 M5SB4**	300	**A553_23.8 P160 BN160L4**	301
141	956	1.9	10.4	23400	**A552_10.4 S5 M5SB4**	300	**A552_10.4 P160 BN160L4**	301
142	952	2.1	10.3	30000	**A602_10.3 S5 M5SB4**	304	**A602_10.3 P160 BN160L4**	305
150	898	1.1	9.7	10100			**A502_9.7 P160 BN160L4**	297
173	781	2.3	8.5	22200	**A552_8.5 S5 M5SB4**	300	**A552_8.5 P160 BN160L4**	301
186	726	2.8	7.9	28300	**A602_7.9 S5 M5SB4**	304	**A602_7.9 P160 BN160L4**	305
189	714	1.3	7.7	9750		296	**A502_7.7 P160 BN160L4**	297
228	592	2.9	6.4	20700	**A552_6.4 S5 M5SB4**	300	**A552_6.4 P160 BN160L4**	301
295	456	3.5	4.9	19400	**A552_4.9 S5 M5SB4**	300	**A552_4.9 P160 BN160L4**	301
301	448	1.8	9.7	8830			**A502_9.7 P160 BN160MB2**	297
352	383	1.3	8.3	5630			**A412_8.3 P160 BN160MB2**	293
379	356	2.1	7.7	8350			**A502_7.7 P160 BN160MB2**	297

18.5 kW

n_2 min-1	M_2 Nm	S	i	R_{n2} N			IEC	
11.5	13954	0.9	126.6	75000	**A903_126.6 S5 M5LA4**	314	**A903_126.6 P180 BN180M4**	315
12.5	12880	1.1	116.9	75000	**A903_116.9 S5 M5LA4**	314	**A903_116.9 P180 BN180M4**	315
13.7	11769	1.2	106.8	75000	**A903_106.8 S5 M5LA4**	314	**A903_106.8 P180 BN180M4**	315
14.8	10864	1.3	98.6	75000	**A903_98.6 S5 M5LA4**	314	**A903_98.6 P180 BN180M4**	315
16.8	9593	1.5	87.1	75000	**A903_87.1 S5 M5LA4**	314	**A903_87.1 P180 BN180M4**	315
18.2	8855	1.6	80.4	75000	**A903_80.4 S5 M5LA4**	314	**A903_80.4 P180 BN180M4**	315
19.6	8206	1.7	74.5	75000	**A903_74.5 S5 M5LA4**	314	**A903_74.5 P180 BN180M4**	315
20.2	7973	1.0	72.4	55600	**A803_72.4 S5 M5LA4**	311	**A803_72.4 P180 BN180M4**	312
21.2	7575	1.8	68.8	75000	**A903_68.8 S5 M5LA4**	314	**A903_68.8 P180 BN180M4**	315
21.9	7360	1.1	66.8	55100			**A803_66.8 P180 BN180M4**	312
24.4	6586	1.2	59.8	54700	**A803_59.8 S5 M5LA4**	311	**A803_59.8 P180 BN180M4**	312
24.5	6568	2.1	59.6	75000	**A903_59.6 S5 M5LA4**	314	**A903_59.6 P180 BN180M4**	315
26.5	6080	1.3	55.2	54100	**A803_55.2 S5 M5LA4**	311	**A803_55.2 P180 BN180M4**	312
26.5	6063	2.3	55.0	74900	**A903_55.0 S5 M5LA4**	314	**A903_55.0 P180 BN180M4**	315
29.8	5399	0.9	49.0	49600	**A703_49.0 S5 M5LA4**	308	**A703_49.0 P180 BN180M4**	309
30	5322	2.6	48.3	73100			**A903_48.3 P180 BN180M4**	315
30	5309	1.5	48.2	53200	**A803_48.2 S5 M5LA4**	311	**A803_48.2 P180 BN180M4**	312
32	4983	1.0	45.2	49000	**A703_45.2 S5 M5LA4**	308	**A703_45.2 P180 BN180M4**	309
33	4912	2.9	44.6	71800			**A903_44.6 P180 BN180M4**	315
33	4900	1.5	44.5	52500	**A803_44.5 S5 M5LA4**	311	**A803_44.5 P180 BN180M4**	312
38	4276	3.3	38.8	69700			**A903_38.8 P180 BN180M4**	315
38	4242	1.8	38.5	51400			**A803_38.5 P180 BN180M4**	312
38	4229	1.1	38.4	48000	**A703_38.4 S5 M5LA4**	308	**A703_38.4 P180 BN180M4**	309
41	3947	3.5	35.8	68500			**A903_35.8 P180 BN180M4**	315
41	3916	1.8	35.5	50600			**A803_35.5 P180 BN180M4**	312

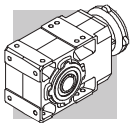

18.5 kW

n_2 min-1	M_2 Nm	S	i	R_{n2} N			IEC	
41	3904	1.2	35.4	47300	**A703_35.4 S5 M5LA4**	308	**A703_35.4 P180 BN180M4**	309
48	3369	1.9	30.6	49300			**A803_30.6 P180 BN180M4**	312
49	3316	1.4	30.1	46100			**A703_30.1 P180 BN180M4**	309
52	3110	2.1	28.2	48500			**A803_28.2 P180 BN180M4**	312
52	3069	0.9	27.9	30000	**A603_27.9 S5 M5LA4**	304	**A603_27.9 P180 BN180M4**	305
53	3061	1.4	27.8	45300			**A703_27.8 P180 BN180M4**	309
57	2833	1.0	25.7	30000	**A603_25.7 S5 M5LA4**	304	**A603_25.7 P180 BN180M4**	305
60	2699	2.5	24.5	47200			**A803_24.5 P180 BN180M4**	312
62	2591	1.7	23.5	43900			**A703_23.5 P180 BN180M4**	309
65	2492	2.5	22.6	46300			**A803_22.6 P180 BN180M4**	312
69	2347	1.7	21.3	43000	**A703_21.3 S5 M5LA4**	308	**A703_21.3 P180 BN180M4**	309
70	2308	2.8	20.9	45600	**A803_20.9 S5 M5LA4**	311	**A803_20.9 P180 BN180M4**	312
74	2167	1.7	19.7	42300	**A703_19.7 S5 M5LA4**	308	**A703_19.7 P180 BN180M4**	309
75	2131	2.8	19.3	44800	**A803_19.3 S5 M5LA4**	311	**A803_19.3 P180 BN180M4**	312
87	1905	1.0	16.7	30000	**A602_16.7 S5 M5LA4**	304	**A602_16.7 P180 BN180M4**	305
87	1839	2.2	16.7	40800	**A703_16.7 S5 M5LA4**	308	**A703_16.7 P180 BN180M4**	309
93	1785	1.0	15.7	25000	**A552_15.7 S5 M5LA4**	300	**A552_15.7 P180 BN180M4**	301
95	1697	2.2	15.4	40100	**A703_15.4 S5 M5LA4**	308	**A703_15.4 P180 BN180M4**	309
112	1488	1.2	13.1	24100	**A552_13.1 S5 M5LA4**	300	**A552_13.1 P180 BN180M4**	301
112	1442	2.7	13.1	38600			**A703_13.1 P180 BN180M4**	309
115	1446	1.4	12.7	30000	**A602_12.7 S5 M5LA4**	304	**A602_12.7 P180 BN180M4**	305
121	1331	2.7	12.1	37800			**A703_12.1 P180 BN180M4**	309
123	1306	1.2	23.8	21600	**A553_23.8 S5 M5SC2**	300	**A553_23.8 P160 BN160L2**	301
141	1179	1.5	10.4	22900	**A552_10.4 S5 M5LA4**	300	**A552_10.4 P180 BN180M4**	301
142	1174	1.7	10.3	29900	**A602_10.3 S5 M5LA4**	304	**A602_10.3 P180 BN180M4**	305
143	1127	2.9	10.2	36300			**A703_10.2 P180 BN180M4**	309
150	1108	0.9	9.7	9530	**A502_9.7 S5 M5LA4**	296	**A502_9.7 P180 BN180M4**	297
155	1040	2.9	9.4	35600			**A703_9.4 P180 BN180M4**	309
173	963	1.9	8.5	21900	**A552_8.5 S5 M5LA4**	300	**A552_8.5 P180 BN180M4**	301
186	895	2.2	7.9	27900	**A602_7.9 S5 M5LA4**	304	**A602_7.9 P180 BN180M4**	305
189	881	1.1	7.7	9260			**A502_7.7 P180 BN180M4**	297
228	730	2.3	6.4	20400	**A552_6.4 S5 M5LA4**	300	**A552_6.4 P180 BN180M4**	301
295	563	2.8	4.9	19100	**A552_4.9 S5 M5LA4**	300	**A552_4.9 P180 BN180M4**	301
379	439	1.7	7.7	8100			**A502_7.7 P160 BN160L2**	297

22 kW

n_2 min-1	M_2 Nm	S	i	R_{n2} N			IEC	
12.5	15317	0.9	116.9	75000			**A903_116.9 P180 BN180L4**	315
13.7	13996	1.0	106.8	75000			**A903_106.8 P180 BN180L4**	315
14.8	12919	1.1	98.6	75000			**A903_98.6 P180 BN180L4**	315
16.8	11408	1.2	87.1	75000			**A903_87.1 P180 BN180L4**	315
18.2	10530	1.3	80.4	75000			**A903_80.4 P180 BN180L4**	315
19.6	9758	1.4	74.5	75000			**A903_74.5 P180 BN180L4**	315
21.2	9008	1.6	68.8	75000			**A903_68.8 P180 BN180L4**	315
21.9	8753	0.9	66.8	51900			**A803_66.8 P180 BN180L4**	312
24.4	7832	1.0	59.8	51800			**A803_59.8 P180 BN180L4**	312
24.5	7811	1.8	59.6	73800			**A903_59.6 P180 BN180L4**	315

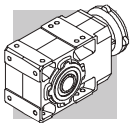

22 kW

n_2 min-1	M_2 Nm	S	i	R_{n2} N			IEC	
26.5	7230	1.1	55.2	51400			**A803_55.2 P180 BN180L4**	312
26.5	7210	1.9	55.0	72700			**A903_55.0 P180 BN180L4**	315
30	6328	2.2	48.3	71100			**A903_48.3 P180 BN180L4**	315
30	6313	1.3	48.2	50900			**A803_48.2 P180 BN180L4**	312
33	5842	2.4	44.6	70000			**A903_44.6 P180 BN180L4**	315
33	5827	1.3	44.5	50300			**A803_44.5 P180 BN180L4**	312
38	5085	2.8	38.8	68100			**A903_38.8 P180 BN180L4**	315
38	5044	1.5	38.5	49500			**A803_38.5 P180 BN180L4**	312
38	5029	1.0	38.4	46000			**A703_38.4 P180 BN180L4**	309
41	4694	2.9	35.8	67000			**A903_35.8 P180 BN180L4**	315
41	4656	1.5	35.5	48900			**A803_35.5 P180 BN180L4**	312
41	4642	1.0	35.4	45500			**A703_35.4 P180 BN180L4**	309
46	4127	3.4	31.5	65200			**A903_31.5 P180 BN180L4**	315
48	4006	1.6	30.6	47800			**A803_30.6 P180 BN180L4**	312
49	3944	1.2	30.1	44500			**A703_30.1 P180 BN180L4**	309
50	3810	3.4	29.1	64000			**A903_29.1 P180 BN180L4**	315
52	3698	1.8	28.2	47100			**A803_28.2 P180 BN180L4**	312
53	3640	1.2	27.8	43900			**A703_27.8 P180 BN180L4**	309
60	3210	2.1	24.5	45900			**A803_24.5 P180 BN180L4**	312
62	3082	1.4	23.5	42700			**A703_23.5 P180 BN180L4**	309
65	2963	2.1	22.6	45200			**A803_22.6 P180 BN180L4**	312
69	2791	1.4	21.3	41900			**A703_21.3 P180 BN180L4**	309
70	2745	2.4	20.9	44600			**A803_20.9 P180 BN180L4**	312
74	2577	1.4	19.7	41200			**A703_19.7 P180 BN180L4**	309
75	2534	2.4	19.3	43800			**A803_19.3 P180 BN180L4**	312
87	2193	3.0	16.7	42500			**A803_16.7 P180 BN180L4**	312
87	2187	1.8	16.7	39900			**A703_16.7 P180 BN180L4**	309
94	2024	3.0	15.5	41700			**A803_15.5 P180 BN180L4**	312
95	2018	1.8	15.4	39200			**A703_15.4 P180 BN180L4**	309
112	1770	1.0	13.1	23500			**A552_13.1 P180 BN180L4**	301
112	1715	2.2	13.1	37900			**A703_13.1 P180 BN180L4**	309
115	1719	1.2	12.7	30000			**A602_12.7 P180 BN180L4**	305
121	1583	2.2	12.1	37200			**A703_12.1 P180 BN180L4**	309
123	1553	1.0	23.8	20900	**A553_23.8 S5 M5LA2**	300	**A553_23.8 P180 BN180M2**	301
141	1401	1.3	10.4	22400			**A552_10.4 P180 BN180L4**	301
142	1396	1.4	10.3	29300			**A602_10.3 P180 BN180L4**	305
143	1340	2.4	10.2	35800			**A703_10.2 P180 BN180L4**	309
155	1237	2.4	9.4	35100			**A703_9.4 P180 BN180L4**	309
173	1145	1.6	8.5	21400			**A552_8.5 P180 BN180L4**	301
186	1064	1.9	7.9	27500			**A602_7.9 P180 BN180L4**	305
189	1047	0.9	7.7	8760			**A502_7.7 P180 BN180L4**	297
228	868	2.0	6.4	20100			**A552_6.4 P180 BN180L4**	301
283	698	2.6	10.4	19100	**A552_10.4 S5 M5LA2**	300	**A552_10.4 P180 BN180M2**	301
295	669	2.4	4.9	18900			**A552_4.9 P180 BN180L4**	301
346	571	3.0	8.5	18200	**A552_8.5 S5 M5LA2**	300	**A552_8.5 P180 BN180M2**	301
379	522	1.4	7.7	7860			**A502_7.7 P180 BN180M2**	297

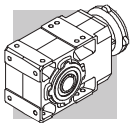

30 kW

n_2 min^{-1}	M_2 Nm	S	i	R_{n2} N			IEC	
16.8	15556	0.9	87.1	70100			**A903_87.1 P200 BN200L4**	315
18.2	14360	1.0	80.4	70000			**A903_80.4 P200 BN200L4**	315
19.6	13307	1.1	74.5	69700			**A903_74.5 P200 BN200L4**	315
21.2	12283	1.1	68.8	69200			**A903_68.8 P200 BN200L4**	315
24.5	10651	1.3	59.6	68500			**A903_59.6 P200 BN200L4**	315
26.5	9832	1.4	55.0	67800			**A903_55.0 P200 BN200L4**	315
30.0	8630	1.6	48.3	66900			**A903_48.3 P200 BN200L4**	315
30	8609	0.9	48.2	45700			**A803_48.2 P200 BN200L4**	312
33	7966	1.8	44.6	66000			**A903_44.6 P200 BN200L4**	315
33	7946	0.9	44.5	45500			**A803_44.5 P200 BN200L4**	312
38	6934	2.0	38.8	64700			**A903_38.8 P200 BN200L4**	315
38	6879	1.1	38.5	45300			**A803_38.5 P200 BN200L4**	312
41	6400	2.1	35.8	63800			**A903_35.8 P200 BN200L4**	315
41	6349	1.1	35.5	45000			**A803_35.5 P200 BN200L4**	312
46	5628	2.5	31.5	62400			**A903_31.5 P200 BN200L4**	315
48	5463	1.2	30.6	44500			**A803_30.6 P200 BN200L4**	312
50	5195	2.5	29.1	61400			**A903_29.1 P200 BN200L4**	315
52	5043	1.3	28.2	44000			**A803_28.2 P200 BN200L4**	312
60	4377	1.5	24.5	43300			**A803_24.5 P200 BN200L4**	312
61	4307	3.1	24.1	59200			**A903_24.1 P200 BN200L4**	315
62	4202	1.0	23.5	40100			**A703_23.5 P200 BN200L4**	309
65	4041	1.5	22.6	42700			**A803_22.6 P200 BN200L4**	312
66	3976	3.1	22.3	58200			**A903_22.3 P200 BN200L4**	315
70	3752	3.3	21.0	57500			**A903_21.0 P200 BN200L4**	315
70	3743	1.7	20.9	42300			**A803_20.9 P200 BN200L4**	312
75	3463	3.3	19.4	56500			**A903_19.4 P200 BN200L4**	315
75	3455	1.8	19.3	41700			**A803_19.3 P200 BN200L4**	312
87	2991	2.2	16.7	40700			**A803_16.7 P200 BN200L4**	312
87	2982	1.3	16.7	38100			**A703_16.7 P200 BN200L4**	309
94	2761	2.2	15.5	40000			**A803_15.5 P200 BN200L4**	312
95	2752	1.3	15.4	37500			**A703_15.4 P200 BN200L4**	309
110	2375	2.8	13.3	38900			**A803_13.3 P200 BN200L4**	312
112	2338	1.6	13.1	36400			**A703_13.1 P200 BN200L4**	309
119	2192	2.8	12.3	38200			**A803_12.3 P200 BN200L4**	312
121	2158	1.6	12.1	35800			**A703_12.1 P200 BN200L4**	309
125	2094	1.7	23.5	35600			**A703_23.5 P200 BN200LA2**	309
137	1903	3.4	10.7	37100			**A803_10.7 P200 BN200L4**	312
143	1827	1.8	10.2	34600			**A703_10.2 P200 BN200L4**	309
148	1757	3.4	9.8	36500			**A803_9.8 P200 BN200L4**	312
155	1687	1.8	9.4	34000			**A703_9.4 P200 BN200L4**	309
176	1486	2.3	16.7	33100			**A703_16.7 P200 BN200LA2**	309
190	1371	2.3	15.4	32500			**A703_15.4 P200 BN200LA2**	309
224	1165	2.7	13.1	31300			**A703_13.1 P200 BN200LA2**	309
243	1075	2.7	12.1	30600			**A703_12.1 P200 BN200LA2**	309
287	910	3.2	10.2	29400			**A703_10.2 P200 BN200LA2**	309
310	840	3.2	9.4	28800			**A703_9.4 P200 BN200LA2**	309

Bonfiglioli Riduttori

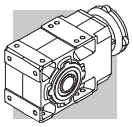

37 kW

n_2 min-1	M_2 Nm	S	i	R_{n2} N			IEC	
21.5	14945	0.9	68.8	63900			**A903_68.8 P225 BN225S4**	315
24.8	12959	1.1	59.6	63900			**A903_59.6 P225 BN225S4**	315
26.9	11962	1.2	55.0	63600			**A903_55.0 P225 BN225S4**	315
31	10499	1.3	48.3	63100			**A903_48.3 P225 BN225S4**	315
33	9692	1.4	44.6	62500			**A903_44.6 P225 BN225S4**	315
38	8436	1.7	38.8	61700			**A903_38.8 P225 BN225S4**	315
38	8369	0.9	38.5	41700			**A803_38.5 P225 BN225S4**	312
41	7787	1.8	35.8	61000			**A903_35.8 P225 BN225S4**	315
42	7725	0.9	35.5	41600			**A803_35.5 P225 BN225S4**	312
47	6847	2.0	31.5	59900			**A903_31.5 P225 BN225S4**	315
48	6647	1.0	30.6	41600			**A803_30.6 P225 BN225S4**	312
51	6321	2.1	29.1	59100			**A903_29.1 P225 BN225S4**	315
52	6135	1.1	28.2	41300			**A803_28.2 P225 BN225S4**	312
60	5326	1.3	24.5	40900			**A803_24.5 P225 BN225S4**	312
61	5241	2.5	24.1	57300			**A903_24.1 P225 BN225S4**	315
65	4916	1.3	22.6	40500			**A803_22.6 P225 BN225S4**	312
67	4837	2.5	22.3	56400			**A903_22.3 P225 BN225S4**	315
70	4565	2.7	21.0	55900			**A903_21.0 P225 BN225S4**	315
71	4554	1.4	20.9	40300			**A803_20.9 P225 BN225S4**	312
76	4214	2.7	19.4	54900			**A903_19.4 P225 BN225S4**	315
77	4204	1.4	19.3	39800			**A803_19.3 P225 BN225S4**	312
88	3668	3.2	16.9	53400			**A903_16.9 P225 BN225S4**	315
88	3639	1.8	16.7	39100			**A803_16.7 P225 BN225S4**	312
95	3386	3.2	15.6	52500			**A903_15.6 P225 BN225S4**	315
96	3359	1.8	15.5	38500			**A803_15.5 P225 BN225S4**	312
111	2890	2.3	13.3	37600			**A803_13.3 P225 BN225S4**	312
121	2667	2.3	12.3	37000			**A803_12.3 P225 BN225S4**	312
139	2316	2.8	10.7	36100			**A803_10.7 P225 BN225S4**	312
151	2137	2.8	9.8	35500			**A803_9.8 P225 BN225S4**	312

45 kW

n_2 min-1	M_2 Nm	S	i	R_{n2} N			IEC	
26.9	14549	1.0	55.0	58700			**A903_55.0 P225 BN225M4**	315
31	12769	1.1	48.3	58900			**A903_48.3 P225 BN225M4**	315
33	11787	1.2	44.6	58600			**A903_44.6 P225 BN225M4**	315
38	10260	1.4	38.8	58300			**A903_38.8 P225 BN225M4**	315
41	9471	1.5	35.8	57800			**A903_35.8 P225 BN225M4**	315
47	8328	1.7	31.5	57200			**A903_31.5 P225 BN225M4**	315
51	7687	1.7	29.1	56600			**A903_29.1 P225 BN225M4**	315
60	6477	1.0	24.5	38300			**A803_24.5 P225 BN225M4**	312
61	6374	2.1	24.1	55200			**A903_24.1 P225 BN225M4**	315
65	5979	1.0	22.6	38100			**A803_22.6 P225 BN225M4**	312
67	5883	2.1	22.3	54500			**A903_22.3 P225 BN225M4**	315
70	5552	2.2	21.0	54000			**A903_21.0 P225 BN225M4**	315
71	5539	1.2	20.9	38000			**A803_20.9 P225 BN225M4**	312
76	5125	2.3	19.4	53200			**A903_19.4 P225 BN225M4**	315
77	5112	1.2	19.3	37700			**A803_19.3 P225 BN225M4**	312

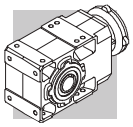

45 kW

n_2 min-1	M_2 Nm	S	i	R_{n2} N			IEC	
88	4461	2.7	16.9	52000			**A903_16.9 P225 BN225M4**	315
88	4425	1.5	16.7	37300			**A803_16.7 P225 BN225M4**	312
95	4118	2.7	15.6	51100			**A903_15.6 P225 BN225M4**	315
96	4085	1.5	15.5	36900			**A803_15.5 P225 BN225M4**	312
108	3621	3.1	13.7	49900			**A903_13.7 P225 BN225M4**	315
111	3515	1.9	13.3	36200			**A803_13.3 P225 BN225M4**	312
117	3342	3.1	12.6	49000			**A903_12.6 P225 BN225M4**	315
121	3244	1.9	12.3	35700			**A803_12.3 P225 BN225M4**	312
139	2816	2.3	10.7	34900			**A803_10.7 P225 BN225M4**	312
141	2771	3.5	10.5	47100			**A903_10.5 P225 BN225M4**	315
151	2600	2.3	9.8	34400			**A803_9.8 P225 BN225M4**	312
153	2558	3.5	9.7	46200			**A903_9.7 P225 BN225M4**	315

55 kW

n_2 min-1	M_2 Nm	S	i	R_{n2} N			IEC	
33	14406	1.0	44.6	53900			**A903_44.6 P250 BN250M4**	315
38	12540	1.1	38.8	54100			**A903_38.8 P250 BN250M4**	315
41	11575	1.2	35.8	54000			**A903_35.8 P250 BN250M4**	315
47	10179	1.4	31.5	53800			**A903_31.5 P250 BN250M4**	315
51	9396	1.4	29.1	53400			**A903_29.1 P250 BN250M4**	315
61	7790	1.7	24.1	52600			**A903_24.1 P250 BN250M4**	315
67	7191	1.7	22.3	52000			**A903_22.3 P250 BN250M4**	315
70	6786	1.8	21.0	51700			**A903_21.0 P250 BN250M4**	315
76	6264	1.8	19.4	51100			**A903_19.4 P250 BN250M4**	315
88	5452	2.2	16.9	50100			**A903_16.9 P250 BN250M4**	315
95	5033	2.2	15.6	49400			**A903_15.6 P250 BN250M4**	315
108	4425	2.5	13.7	48400			**A903_13.7 P250 BN250M4**	315
117	4085	2.6	12.6	47600			**A903_12.6 P250 BN250M4**	315
141	3387	2.9	10.5	45900			**A903_10.5 P250 BN250M4**	315
153	3126	2.9	9.7	45100			**A903_9.7 P250 BN250M4**	315

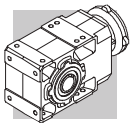

A 10 — 150 Nm

	i	n_1 = 2800 min^{-1}					n_1 = 1400 min^{-1}					
		n_2 min^{-1}	M_{n2} Nm	P_{n1} kW	R_{n1} N	R_{n2} N	n_2 min^{-1}	M_{n2} Nm	P_{n1} kW	R_{n1} N	R_{n2} N	
A 10 2_5.5	5.5	512	73	4.2	—	1830	256	73	2.1	960	2460	
A 10 2_6.3	6.3	442	80	3.9	—	1900	221	80	2.0	830	2560	
A 10 2_7.2	7.2	388	92	4.0	—	1910	194	93	2.0	630	2600	
A 10 2_8.5	8.5	329	92	3.4	—	2060	164	93	1.7	720	2790	
A 10 2_9.6	9.6	291	102	3.3	—	2090	146	128	2.1	—	2650	
A 10 2_10.6	10.6	265	125	3.7	540	2010	133	150	2.2	810	2590	
A 10 2_12.3	12.3	228	110	2.8	—	2280	114	138	1.7	—	2880	
A 10 2_13.9	13.9	201	135	3.0	620	2220	101	150	1.7	1080	2960	
A 10 2_16.4	16.4	170	140	2.7	610	2370	85	150	1.4	1140	3200	
A 10 2_18.6	18.6	151	147	2.5	650	2460	75	150	1.3	1180	3380	
A 10 2_21.4	21.4	131	150	2.2	650	2610	66	150	1.1	1200	3600	
A 10 2_23.8	23.8	118	150	2.0	750	2750	59	150	0.98	1220	3780	277
A 10 2_25.5	25.5	110	150	1.8	750	2840	55	150	0.92	1220	3900	
A 10 2_28.6	28.6	98	150	1.6	830	3000	49	150	0.82	1250	4100	
A 10 2_32.2	32.2	87	150	1.5	880	3170	43	150	0.73	1270	4310	
A 10 2_35.1	35.1	80	150	1.3	880	3300	40	150	0.67	1270	4470	
A 10 2_40.9	40.9	69	150	1.1	910	3530	34	150	0.57	1300	4770	
A 10 2_45.4	45.4	62	150	1.0	910	3700	31	150	0.52	1300	4980	
A 10 2_51.3	51.3	55	150	0.91	910	3910	27.3	150	0.46	1290	5240	
A 10 2_58.6	58.6	48	150	0.80	920	4140	23.9	150	0.40	1300	5500	
A 10 2_65.9	65.9	42	150	0.71	920	4360	21.2	150	0.35	1300	5500	
A 10 2_76.4	76.4	37	150	0.61	930	4640	18.3	150	0.31	1300	5500	
A 10 2_91.6	91.6	31	130	0.44	1020	5160	15.3	130	0.22	1300	5500	

(—) Contact our technical service department advising radial load data (rotation direction, orientation, position)

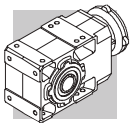

A 10 — 150 Nm

	i	n_1 = 900 min^{-1}					n_1 = 500 min^{-1}					
		n_2 min^{-1}	M_{n2} Nm	P_{n1} kW	R_{n1} N	R_{n2} N	n_2 min^{-1}	M_{n2} Nm	P_{n1} kW	R_{n1} N	R_{n2} N	
A 10 2_5.5	5.5	165	73	1.3	1300	2950	91	73	0.74	1300	3720	
A 10 2_6.3	6.3	142	80	1.3	1300	3070	79	80	0.70	1300	4100	
A 10 2_7.2	7.2	125	93	1.3	1160	3130	69	93	0.72	1300	3970	
A 10 2_8.5	8.5	106	95	1.1	1200	3330	59	110	0.72	1300	4100	
A 10 2_9.6	9.6	94	128	1.3	500	3230	52	128	0.74	1300	4160	
A 10 2_10.6	10.6	85	150	1.4	1300	3200	47	150	0.79	1300	4160	
A 10 2_12.3	12.3	73	150	1.2	180	3420	41	150	0.68	1030	4430	
A 10 2_13.9	13.9	65	150	1.1	1300	3630	36	150	0.60	1300	4680	
A 10 2_16.4	16.4	55	150	0.91	1300	3900	30	150	0.51	1300	5010	
A 10 2_18.6	18.6	48	150	0.81	1300	4120	26.9	150	0.45	1300	5270	
A 10 2_21.4	21.4	42	150	0.70	1300	4370	23.4	150	0.39	1300	5500	
A 10 2_23.8	23.8	38	150	0.63	1300	4570	21.0	150	0.35	1300	5500	277
A 10 2_25.5	25.5	35	150	0.59	1300	4710	19.6	150	0.33	1300	5500	
A 10 2_28.6	28.6	31	150	0.53	1300	4940	17.5	150	0.29	1300	5500	
A 10 2_32.2	32.2	28.0	150	0.47	1300	5190	15.5	150	0.26	1300	5500	
A 10 2_35.1	35.1	25.6	150	0.43	1300	5380	14.2	150	0.24	1300	5500	
A 10 2_40.9	40.9	22.0	150	0.37	1300	5500	12.2	150	0.20	1300	5500	
A 10 2_45.4	45.4	19.8	150	0.33	1300	5500	11.0	150	0.18	1300	5500	
A 10 2_51.3	51.3	17.6	150	0.29	1300	5500	9.8	150	0.16	1300	5500	
A 10 2_58.6	58.6	15.4	150	0.26	1300	5500	8.5	150	0.14	1300	5500	
A 10 2_65.9	65.9	13.7	150	0.23	1300	5500	7.6	150	0.13	1300	5500	
A 10 2_76.4	76.4	11.8	150	0.20	1300	5500	6.5	150	0.11	1300	5500	
A 10 2_91.6	91.6	9.8	130	0.14	1300	5500	5.5	130	0.08	1300	5500	

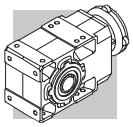

A 20 — 250 Nm

	i	n_1 = 2800 min^{-1}					n_1 = 1400 min^{-1}					
		n_2 min^{-1}	M_{n2} Nm	P_{n1} kW	R_{n1} N	R_{n2} N	n_2 min^{-1}	M_{n2} Nm	P_{n1} kW	R_{n1} N	R_{n2} N	
A 20 2_5.4	5.4	523	96	5.6	610	1910	262	121	3.5	770	2400	
A 20 2_6.5	6.5	428	107	5.1	490	2010	214	135	3.2	610	2530	
A 20 2_7.3	7.3	384	113	4.8	510	2070	192	143	3.1	630	2600	
A 20 2_8.4	8.4	334	116	4.3	510	2180	167	146	2.7	650	2750	
A 20 2_9.4	9.4	299	122	4.1	530	2260	149	154	2.6	660	2840	
A 20 2_10.3	10.3	271	183	5.5	650	1970	135	225	3.4	890	2520	
A 20 2_12.0	12.0	234	128	3.3	550	2280	117	161	2.1	690	3120	
A 20 2_14.1	14.1	199	199	4.4	750	2210	99	245	2.7	960	2820	
A 20 2_16.2	16.2	173	209	4.0	700	2310	87	250	2.4	1040	2990	
A 20 2_18.1	18.1	155	216	3.7	760	2400	77	250	2.2	1210	3170	
A 20 2_21.2	21.2	132	226	3.3	710	2540	66	250	1.8	1290	3430	
A 20 2_23.1	23.1	121	232	3.1	710	2620	61	250	1.7	1360	3580	
A 20 2_26.5	26.5	106	241	2.8	660	2750	53	250	1.5	1410	3820	
A 20 2_29.2	29.2	96	249	2.7	670	2850	48	250	1.3	1510	4000	
A 20 2_31.3	31.3	89	250	2.5	660	2940	45	250	1.2	1510	4130	
A 20 2_35.4	35.4	79	250	2.2	800	3140	40	250	1.1	1650	4380	
A 20 2_39.6	39.6	71	250	2.0	880	3320	35	250	0.98	1710	4600	
A 20 2_43.2	43.2	65	250	1.8	880	3460	32	250	0.90	1710	4790	
A 20 2_48.3	48.3	58	250	1.6	920	3650	29.0	250	0.81	1720	5030	281
A 20 2_53.7	53.7	52	250	1.5	920	3840	26.1	250	0.73	1720	5270	
A 20 2_63.1	63.1	44	245	1.2	1040	4180	22.2	245	0.61	1740	5680	
A 20 2_71.0	71.0	39	210	0.92	1360	4640	19.7	210	0.46	1790	6200	
A 20 2_79.9	79.9	35	210	0.82	1360	4880	17.5	210	0.41	1790	6200	
A 20 2_92.3	92.3	30	200	0.68	1380	5250	15.2	200	0.34	1810	6200	
A 20 3_109.2	109.2	25.6	165	0.49	1180	5900	12.8	205	0.30	1300	6200	
A 20 3_120.5	120.5	23.2	168	0.45	1130	6110	11.6	210	0.28	1300	6200	
A 20 3_129.1	129.1	21.7	175	0.44	1210	6200	10.8	215	0.27	1300	6200	
A 20 3_146.1	146.1	19.2	183	0.40	1160	6200	9.6	230	0.25	1300	6200	
A 20 3_163.4	163.4	17.1	190	0.37	1240	6200	8.6	235	0.23	1300	6200	
A 20 3_178.3	178.3	15.7	195	0.35	1200	6200	7.9	245	0.22	1300	6200	
A 20 3_199.2	199.2	14.1	200	0.32	1270	6200	7.0	250	0.20	1300	6200	
A 20 3_221.3	221.3	12.7	203	0.30	1240	6200	6.3	250	0.18	1300	6200	
A 20 3_260.5	260.5	10.8	214	0.26	1270	6200	5.4	250	0.15	1300	6200	
A 20 3_292.8	292.8	9.6	218	0.24	1300	6200	4.8	250	0.14	1300	6200	
A 20 3_329.4	329.4	8.5	221	0.22	1300	6200	4.3	250	0.12	1300	6200	
A 20 3_380.9	380.9	7.4	226	0.19	1300	6200	3.7	250	0.11	1300	6200	

Bonfiglioli Riduttori

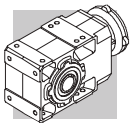

A 20 — 250 Nm

	i	n_1 = 900 min^{-1}					n_1 = 500 min^{-1}					
		n_2 min^{-1}	M_{n2} Nm	P_{n1} kW	R_{n1} N	R_{n2} N	n_2 min^{-1}	M_{n2} Nm	P_{n1} kW	R_{n1} N	R_{n2} N	
A 20 2_5.4	5.4	168	140	2.6	900	2780	93	170	1.8	1100	3390	
A 20 2_6.5	6.5	138	156	2.4	720	2930	76	190	1.6	860	3570	
A 20 2_7.3	7.3	123	165	2.3	740	3020	69	201	1.5	890	3670	
A 20 2_8.4	8.4	108	170	2.0	730	3180	60	206	1.4	910	3870	
A 20 2_9.4	9.4	96	179	1.9	760	3290	53	210	1.2	1090	4050	
A 20 2_10.3	10.3	87	250	2.4	1190	2990	48	250	1.3	2200	3980	
A 20 2_12.0	12.0	75	187	1.6	790	2990	42	210	0.98	1336	4510	
A 20 2_14.1	14.1	64	250	1.8	1610	3490	36	250	0.99	2200	4590	
A 20 2_16.2	16.2	56	250	1.6	1690	3730	31	250	0.86	2200	4880	
A 20 2_18.1	18.1	50	250	1.4	1860	3930	27.6	250	0.77	2200	5140	
A 20 2_21.2	21.2	42	250	1.2	1940	4230	23.6	250	0.66	2200	5500	
A 20 2_23.1	23.1	39	250	1.1	1970	4400	21.6	250	0.60	2200	5710	
A 20 2_26.5	26.5	34	250	0.95	1980	4680	18.9	250	0.53	2200	6050	
A 20 2_29.2	29.2	31	250	0.86	2000	4890	17.1	250	0.48	2200	6200	
A 20 2_31.3	31.3	28.7	250	0.80	2000	5040	16.0	250	0.44	2200	6200	
A 20 2_35.4	35.4	25.4	250	0.71	2020	5330	14.1	250	0.39	2200	6200	
A 20 2_39.6	39.6	22.7	250	0.63	2040	5590	12.6	250	0.35	2200	6200	
A 20 2_43.2	43.2	20.8	250	0.58	2040	5800	11.6	250	0.32	2200	6200	
A 20 2_48.3	48.3	18.6	250	0.52	2040	6080	10.4	250	0.29	2200	6200	281
A 20 2_53.7	53.7	16.8	250	0.47	2050	6200	9.3	250	0.26	2200	6200	
A 20 2_63.1	63.1	14.3	245	0.39	2060	6200	7.9	245	0.22	2200	6200	
A 20 2_71.0	71.0	12.7	210	0.30	2120	6200	7.0	210	0.16	2200	6200	
A 20 2_79.9	79.9	11.3	210	0.26	2120	6200	6.3	210	0.15	2200	6200	
A 20 2_92.3	92.3	9.7	200	0.22	2140	6200	5.4	200	0.12	2200	6200	
A 20 3_109.2	109.2	8.2	240	0.23	1300	6200	4.6	250	0.13	1300	6200	
A 20 3_120.5	120.5	7.5	245	0.21	1300	6200	4.1	250	0.12	1300	6200	
A 20 3_129.1	129.1	7.0	250	0.20	1300	6200	3.9	250	0.11	1300	6200	
A 20 3_146.1	146.1	6.2	250	0.18	1300	6200	3.4	250	0.10	1300	6200	
A 20 3_163.4	163.4	5.5	250	0.16	1300	6200	3.1	250	0.09	1300	6200	
A 20 3_178.3	178.3	5.0	250	0.15	1300	6200	2.8	250	0.08	1300	6200	
A 20 3_199.2	199.2	4.5	250	0.13	1300	6200	2.5	250	0.07	1300	6200	
A 20 3_221.3	221.3	4.1	250	0.12	1300	6200	2.3	250	0.06	1300	6200	
A 20 3_260.5	260.5	3.5	250	0.10	1300	6200	1.9	250	0.06	1300	6200	
A 20 3_292.8	292.8	3.1	250	0.09	1300	6200	1.7	250	0.05	1300	6200	
A 20 3_329.4	329.4	2.7	250	0.08	1300	6200	1.5	250	0.04	1300	6200	
A 20 3_380.9	380.9	2.4	250	0.07	1300	6200	1.3	250	0.04	1300	6200	

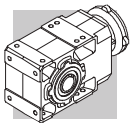

A 30 — 410 Nm

	i	n_1 = 2800 min^{-1}					n_1 = 1400 min^{-1}					
		n_2 min^{-1}	M_{n2} Nm	P_{n1} kW	R_{n1} N	R_{n2} N	n_2 min^{-1}	M_{n2} Nm	P_{n1} kW	R_{n1} N	R_{n2} N	
A 30 2_5.4	5.4	517	175	10.1	1130	2480	259	220	6.3	1430	3130	
A 30 2_6.4	6.4	437	185	9.0	1120	2630	218	230	5.6	1470	3330	
A 30 2_7.0	7.0	399	194	8.6	1140	2690	199	245	5.4	1430	3380	
A 30 2_8.5	8.5	331	200	7.4	1220	2900	165	250	4.6	1570	3660	
A 30 2_9.3	9.3	301	214	7.2	1140	2950	150	270	4.5	1440	3710	
A 30 2_10.5	10.5	268	278	8.3	1800	2770	134	340	5.1	2200	3550	
A 30 2_11.8	11.8	238	230	6.1	1130	3200	119	290	3.8	1420	4030	
A 30 2_13.6	13.6	206	301	6.9	1830	3030	103	370	4.3	2200	3870	
A 30 2_16.3	16.3	171	318	6.1	1830	3240	86	385	3.7	2200	4170	
A 30 2_18.0	18.0	156	327	5.7	1840	3350	78	400	3.5	2200	4290	
A 30 2_20.5	20.5	136	340	5.2	1830	3510	68	410	3.1	2200	4530	
A 30 2_22.8	22.8	123	351	4.8	1850	3640	62	410	2.8	2200	4770	
A 30 2_26.5	26.5	106	367	4.3	1840	3850	53	410	2.4	2200	5150	
A 30 2_29.3	29.3	96	378	4.0	1847	3980	48	410	2.2	2200	5400	
A 30 2_33.4	33.4	84	393	3.7	1840	4170	42	410	1.9	2200	5750	
A 30 2_36.6	36.6	76	404	3.4	1840	4310	38	410	1.7	2200	6010	
A 30 2_39.3	39.3	71	410	3.3	1810	4430	36	410	1.6	2200	6200	
A 30 2_43.4	43.4	64	410	2.9	1850	4660	32	410	1.5	2200	6490	
A 30 2_48.3	48.3	58	410	2.6	1860	4920	29.0	410	1.3	2200	6810	
A 30 2_52.7	52.7	53	410	2.4	1860	5130	26.6	410	1.2	2200	7080	285
A 30 2_59.4	59.4	47	400	2.1	1890	5500	23.6	400	1.0	2200	7530	
A 30 2_66.0	66.0	42	390	1.8	1900	5840	21.2	390	0.92	2200	7940	
A 30 2_76.5	76.5	37	350	1.4	1950	6480	18.3	350	0.71	2200	8690	
A 30 2_86.7	86.7	32	320	1.2	2000	7010	16.2	320	0.58	2200	9310	
A 30 2_97.5	97.5	28.7	300	0.96	2020	7480	14.4	300	0.48	2200	9600	
A 30 3_109.1	109.1	25.7	240	0.71	1300	8240	12.8	300	0.44	1300	9600	
A 30 3_120.5	120.5	23.2	243	0.65	1120	8540	11.6	300	0.40	1300	9600	
A 30 3_137.4	137.4	20.4	250	0.59	1300	8950	10.2	315	0.37	1300	9600	
A 30 3_150.7	150.7	18.6	261	0.56	1170	9210	9.3	330	0.35	1300	9600	
A 30 3_161.4	161.4	17.3	270	0.54	1300	9410	8.7	340	0.34	1300	9600	
A 30 3_178.5	178.5	15.7	274	0.49	1210	9600	7.8	345	0.31	1300	9600	
A 30 3_198.5	198.5	14.1	280	0.45	1300	9600	7.1	350	0.28	1300	9600	
A 30 3_216.6	216.6	12.9	287	0.43	1240	9600	6.5	360	0.27	1300	9600	
A 30 3_244.3	244.3	11.5	295	0.39	1300	9600	5.7	370	0.24	1300	9600	
A 30 3_271.5	271.5	10.3	301	0.36	1280	9600	5.2	380	0.23	1300	9600	
A 30 3_314.5	314.5	8.9	309	0.32	1300	9600	4.5	390	0.20	1300	9600	
A 30 3_356.3	356.3	7.9	320	0.29	1300	9600	3.9	370	0.17	1300	9600	
A 30 3_400.8	400.8	7.0	320	0.26	1300	9600	3.5	360	0.14	1300	9600	

Bonfiglioli Riduttori

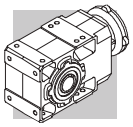

A 30 — 410 Nm

	i	n_1 = 900 min^{-1}					n_1 = 500 min^{-1}					
		n_2 min^{-1}	M_{n2} Nm	P_{n1} kW	R_{n1} N	R_{n2} N	n_2 min^{-1}	M_{n2} Nm	P_{n1} kW	R_{n1} N	R_{n2} N	
A 30 2_5.4	5.4	166	255	4.7	1660	3630	92	300	3.1	2200	4470	
A 30 2_6.4	6.4	140	270	4.2	1630	3830	78	300	2.6	2200	4830	
A 30 2_7.0	7.0	128	284	4.1	1650	3920	71	300	2.4	2200	5040	
A 30 2_8.5	8.5	106	290	3.4	1810	4240	59	300	2.0	2200	5470	
A 30 2_9.3	9.3	97	300	3.2	1900	4380	54	300	1.8	2200	5710	
A 30 2_10.5	10.5	86	391	3.7	2200	4130	48	410	2.2	2200	5400	
A 30 2_11.8	11.8	76	300	2.6	2200	4880	42	300	1.4	2200	6320	
A 30 2_13.6	13.6	66	410	3.0	2200	4600	37	410	1.7	2200	6110	
A 30 2_16.3	16.3	55	410	2.5	2200	5044	31	410	1.4	2200	6650	
A 30 2_18.0	18.0	50	410	2.3	2200	5280	27.8	410	1.3	2200	6940	
A 30 2_20.5	20.5	44	410	2.0	2200	5630	24.3	410	1.1	2200	7360	
A 30 2_22.8	22.8	40	410	1.8	2200	5910	22.0	410	1.0	2200	7700	
A 30 2_26.5	26.5	34	410	1.5	2200	6340	18.8	410	0.86	2200	8230	
A 30 2_29.3	29.3	31	410	1.4	2200	6640	17.1	410	0.78	2200	8590	
A 30 2_33.4	33.4	26.9	410	1.2	2200	7040	15.0	410	0.68	2200	9080	
A 30 2_36.6	36.6	24.6	410	1.1	2200	7340	13.6	410	0.62	2200	9440	
A 30 2_39.3	39.3	22.9	410	1.0	2200	7560	12.7	410	0.58	2200	9600	
A 30 2_43.4	43.4	20.7	410	0.95	2200	7900	11.5	410	0.53	2200	9600	
A 30 2_48.3	48.3	18.6	410	0.85	2200	8270	10.4	410	0.47	2200	9600	
A 30 2_52.7	52.7	17.1	410	0.78	2200	8590	9.5	410	0.43	2200	9600	285
A 30 2_59.4	59.4	15.1	400	0.67	2200	9090	8.4	400	0.37	2200	9600	
A 30 2_66.0	66.0	13.6	390	0.59	2200	9560	7.6	390	0.33	2200	9600	
A 30 2_76.5	76.5	11.8	350	0.46	2200	9600	6.5	350	0.25	2200	9600	
A 30 2_86.7	86.7	10.4	320	0.37	2200	9600	5.8	320	0.21	2200	9600	
A 30 2_97.5	97.5	9.2	300	0.31	2200	9600	5.1	300	0.17	2200	9600	
A 30 3_109.1	109.1	8.3	350	0.33	1300	9600	4.6	370	0.20	1300	9600	
A 30 3_120.5	120.5	7.5	354	0.30	1300	9600	4.2	410	0.20	1300	9600	
A 30 3_137.4	137.4	6.5	370	0.28	1300	9600	3.6	410	0.17	1300	9600	
A 30 3_150.7	150.7	6.0	381	0.26	1300	9600	3.3	410	0.16	1300	9600	
A 30 3_161.4	161.4	5.6	390	0.25	1300	9600	3.1	410	0.15	1300	9600	
A 30 3_178.5	178.5	5.0	400	0.23	1300	9600	2.8	410	0.13	1300	9600	
A 30 3_198.5	198.5	4.5	410	0.21	1300	9600	2.5	410	0.12	1300	9600	
A 30 3_216.6	216.6	4.2	410	0.20	1300	9600	2.3	410	0.11	1300	9600	
A 30 3_244.3	244.3	3.7	410	0.17	1300	9600	2.0	410	0.10	1300	9600	
A 30 3_271.5	271.5	3.3	410	0.16	1300	9600	1.8	410	0.09	1300	9600	
A 30 3_314.5	314.5	2.9	410	0.13	1300	9600	1.6	410	0.07	1300	9600	
A 30 3_356.3	356.3	2.5	380	0.11	1300	9600	1.4	380	0.06	1300	9600	
A 30 3_400.8	400.8	2.2	360	0.09	1300	9600	1.2	360	0.05	1300	9600	

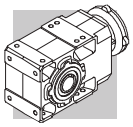

A 35 — 600 Nm

	i	n_1 = 2800 min^{-1}					n_1 = 1400 min^{-1}					
		n_2 min^{-1}	M_{n2} Nm	P_{n1} kW	R_{n1} N	R_{n2} N	n_2 min^{-1}	M_{n2} Nm	P_{n1} kW	R_{n1} N	R_{n2} N	
A 35 2_5.4	5.4	517	246	14.2	1420	4000	259	310	8.9	1790	5050	
A 35 2_6.4	6.4	437	262	12.7	1420	4230	218	330	8.0	1790	5330	
A 35 2_7.0	7.0	399	278	12.3	1410	4320	199	350	7.8	1790	5440	
A 35 2_8.5	8.5	331	286	10.5	1450	4650	165	360	6.6	1830	5850	
A 35 2_9.3	9.3	301	302	10.1	1450	4760	150	380	6.4	1830	6000	
A 35 2_10.6	10.6	263	310	9.1	1440	5010	132	390	5.7	1830	6310	
A 35 2_11.8	11.8	238	317	8.4	1480	5200	119	400	5.3	1860	6550	
A 35 2_13.1	13.1	214	400	10.9	1630	4470	107	550	6.6	2100	5780	
A 35 2_15.5	15.5	181	430	10.0	1620	4670	90	570	5.7	2120	6190	
A 35 2_17.0	17.0	165	465	9.7	1620	4730	83	600	5.5	2130	6310	
A 35 2_20.4	20.4	137	500	8.4	1630	5080	69	600	4.6	2170	6930	
A 35 2_22.5	22.5	125	540	7.8	1660	5290	62	600	4.2	2200	7260	
A 35 2_25.7	25.7	109	585	7.1	1640	5540	55	600	3.6	2200	7740	
A 35 2_28.4	28.4	98	600	6.6	1660	5760	49	600	3.3	2200	8130	
A 35 2_33.2	33.2	84	600	5.6	910	6240	42	600	2.8	2200	8730	
A 35 2_36.6	36.6	76	600	5.1	1080	6560	38	600	2.6	2200	9140	
A 35 2_41.8	41.8	67	600	4.5	1140	7010	34	600	2.2	2200	9700	
A 35 2_45.8	45.8	61	600	4.1	1260	7330	31	600	2.0	2200	10100	
A 35 2_49.1	49.1	57	600	3.8	1260	7580	28.5	600	1.9	2200	10400	
A 35 2_54.3	54.3	52	600	3.4	1360	7950	25.8	600	1.7	2200	10900	289
A 35 2_60.4	60.4	46	600	3.1	1470	8360	23.2	600	1.6	2200	11400	
A 35 2_65.8	65.8	43	600	2.8	1470	8700	21.3	600	1.4	2200	11800	
A 35 2_74.3	74.3	38	600	2.5	1560	9200	18.8	600	1.3	2200	12000	
A 35 2_82.5	82.5	34	600	2.3	1560	9650	17.0	600	1.1	2200	12000	
A 35 2_95.6	95.6	29.3	540	1.8	1860	10600	14.6	540	0.88	2200	12000	
A 35 3_105.5	105.5	26.5	430	1.3	550	12000	13.3	525	0.80	780	12000	
A 35 3_116.9	116.9	24.0	455	1.3	650	12000	12.0	560	0.77	870	12000	
A 35 3_136.3	136.3	20.5	470	1.1	870	12000	10.3	575	0.68	1110	12000	
A 35 3_150.6	150.6	18.6	495	1.1	900	12000	9.3	600	0.64	1160	12000	
A 35 3_171.8	171.8	16.3	505	0.95	960	12000	8.1	600	0.56	1250	12000	
A 35 3_188.3	188.3	14.9	525	0.90	990	12000	7.4	600	0.51	1300	12000	
A 35 3_201.8	201.8	13.9	525	0.84	1020	12000	6.9	600	0.48	1300	12000	
A 35 3_223.2	223.2	12.5	545	0.79	1050	12000	6.3	600	0.43	1300	12000	
A 35 3_248.1	248.1	11.3	565	0.73	1080	12000	5.6	600	0.39	1300	12000	
A 35 3_270.7	270.7	10.3	570	0.68	1110	12000	5.2	600	0.36	1300	12000	
A 35 3_305.4	305.4	9.2	585	0.62	1140	12000	4.6	600	0.32	1300	12000	
A 35 3_339.3	339.3	8.3	520	0.49	1210	12000	4.1	520	0.25	1300	12000	
A 35 3_393.2	393.2	7.1	465	0.38	1260	12000	3.6	465	0.19	1300	12000	

Bonfiglioli Riduttori

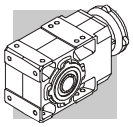

A 35 — 600 Nm

	i	n_1 = 900 min^{-1}					n_1 = 500 min^{-1}					
		n_2 min^{-1}	M_{n2} Nm	P_{n1} kW	R_{n1} N	R_{n2} N	n_2 min^{-1}	M_{n2} Nm	P_{n1} kW	R_{n1} N	R_{n2} N	
A 35 2_5.4	5.4	166	340	6.3	2150	5940	92	340	3.5	2200	7600	
A 35 2_6.4	6.4	140	350	5.5	2190	6340	78	350	3.0	2200	8090	
A 35 2_7.0	7.0	128	370	5.3	2200	6490	71	370	2.9	2200	8290	
A 35 2_8.5	8.5	106	380	4.5	2200	6970	59	380	2.5	2200	8890	
A 35 2_9.3	9.3	97	400	4.3	2200	7160	54	400	2.4	2200	9140	
A 35 2_10.6	10.6	85	400	3.8	2200	7570	47	400	2.1	2200	9650	
A 35 2_11.8	11.8	76	400	3.4	2200	7910	42	400	1.9	2200	10100	
A 35 2_13.1	13.1	69	600	4.6	2200	6910	38	600	2.6	2200	9140	
A 35 2_15.5	15.5	58	600	3.9	2090	7510	32	600	2.2	2200	9860	
A 35 2_17.0	17.0	53	600	3.5	2200	7840	29.5	600	2.0	2200	10300	
A 35 2_20.4	20.4	44	600	2.9	2200	8560	24.5	600	1.6	2200	11100	
A 35 2_22.5	22.5	40	600	2.7	2200	8950	22.2	600	1.5	2200	11600	
A 35 2_25.7	25.7	35	600	2.3	2200	9500	19.5	600	1.3	2200	12000	
A 35 2_28.4	28.4	32	600	2.1	2200	9950	17.6	600	1.2	2200	12000	
A 35 2_33.2	33.2	27.1	600	1.8	2200	10700	15.1	600	1.0	2200	12000	
A 35 2_36.6	36.6	24.6	600	1.6	2200	11100	13.7	600	0.91	2200	12000	
A 35 2_41.8	41.8	21.5	600	1.4	2200	11800	12.0	600	0.80	2200	12000	
A 35 2_45.8	45.8	19.6	600	1.3	2200	12000	10.9	600	0.73	2200	12000	
A 35 2_49.1	49.1	18.3	600	1.2	2200	12000	10.2	600	0.68	2200	12000	
A 35 2_54.3	54.3	16.6	600	1.1	2200	12000	9.2	600	0.62	2200	12000	289
A 35 2_60.4	60.4	14.9	600	1.0	2200	12000	8.3	600	0.55	2200	12000	
A 35 2_65.8	65.8	13.7	600	0.91	2200	12000	7.6	600	0.51	2200	12000	
A 35 2_74.3	74.3	12.1	600	0.81	2200	12000	6.7	600	0.45	2200	12000	
A 35 2_82.5	82.5	10.9	600	0.73	2200	12000	6.1	600	0.40	2200	12000	
A 35 2_95.6	95.6	9.4	540	0.57	2200	12000	5.2	540	0.31	2200	12000	
A 35 3_105.5	105.5	8.5	600	0.59	940	12000	4.7	600	0.33	1300	12000	
A 35 3_116.9	116.9	7.7	600	0.53	1230	12000	4.3	600	0.30	1300	12000	
A 35 3_136.3	136.3	6.6	600	0.46	1300	12000	3.7	600	0.25	1300	12000	
A 35 3_150.6	150.6	6.0	600	0.41	1300	12000	3.3	600	0.23	1300	12000	
A 35 3_171.8	171.8	5.2	600	0.36	1300	12000	2.9	600	0.20	1300	12000	
A 35 3_188.3	188.3	4.8	600	0.33	1300	12000	2.7	600	0.18	1300	12000	
A 35 3_201.8	201.8	4.5	600	0.31	1300	12000	2.5	600	0.17	1300	12000	
A 35 3_223.2	223.2	4.0	600	0.28	1300	12000	2.2	600	0.15	1300	12000	
A 35 3_248.1	248.1	3.6	600	0.25	1300	12000	2.0	600	0.14	1300	12000	
A 35 3_270.7	270.7	3.3	600	0.23	1300	12000	1.8	600	0.13	1300	12000	
A 35 3_305.4	305.4	2.9	600	0.20	1300	12000	1.6	600	0.11	1300	12000	
A 35 3_339.3	339.3	2.7	520	0.16	1300	12000	1.5	520	0.09	1300	12000	
A 35 3_393.2	393.2	2.3	465	0.12	1300	12000	1.3	465	0.07	1300	12000	

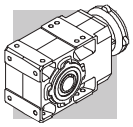

A 41 — 850 Nm

	i	n_1 = 2800 min^{-1}					n_1 = 1400 min^{-1}					
		n_2 min^{-1}	M_{n2} Nm	P_{n1} kW	R_{n1} N	R_{n2} N	n_2 min^{-1}	M_{n2} Nm	P_{n1} kW	R_{n1} N	R_{n2} N	
A 41 2_5.2	5.2	534	450	27	1790	4350	267	550	16.4	2450	5560	
A 41 2_7.1	7.1	393	490	22	1890	4850	197	550	12.0	2670	6430	
A 41 2_8.3	8.3	336	510	19.1	1900	5140	168	550	10.3	2750	6920	
A 41 2_9.2	9.2	304	530	18.0	1980	5300	152	550	9.3	2860	7240	
A 41 2_10.1	10.1	276	435	13.4	2680	6030	138	535	8.2	3390	7650	
A 41 2_11.7	11.7	238	550	14.6	2050	5870	119	550	7.3	2950	8070	
A 41 2_13.8	13.8	204	480	10.9	2690	6680	102	585	6.6	3430	8510	
A 41 2_16.1	16.1	174	500	9.7	2700	7070	87	610	5.9	3430	9000	
A 41 2_17.8	17.8	158	515	9.0	2730	7310	79	630	5.5	3470	9300	
A 41 2_22.7	22.7	123	550	7.6	2730	7970	62	680	4.7	3460	10100	
A 41 2_28.3	28.3	99	595	6.6	2670	8570	49	730	4.0	3450	10900	
A 41 2_35.9	35.9	78	635	5.5	2590	9320	39	780	3.4	3410	11800	
A 41 2_45.1	45.1	62	680	4.7	2500	10100	31	830	2.9	3330	12800	
A 41 2_48.3	48.3	58	690	4.5	2430	10300	29.0	850	2.7	3200	13100	
A 41 2_53.1	53.1	53	700	4.1	2470	10700	26.3	850	2.5	3330	13700	
A 41 2_58.8	58.8	48	730	3.9	2390	11100	23.8	850	2.3	3460	14300	293
A 41 2_64.2	64.2	44	740	3.6	2320	11500	21.8	850	2.1	3460	14800	
A 41 2_71.3	71.3	39	780	3.4	2120	11800	19.6	850	1.9	3470	15000	
A 41 2_79.2	79.2	35	800	3.1	1990	12300	17.7	800	1.6	3500	15000	
A 41 3_92.8	92.8	30	650	2.3	270	14000	15.1	800	1.4	430	15000	
A 41 3_115.9	115.9	24.2	800	2.2	310	14600	12.1	850	1.2	980	15000	
A 41 3_146.9	146.9	19.1	850	1.9	790	15000	9.5	850	0.93	1640	15000	
A 41 3_184.4	184.4	15.2	850	1.5	1290	15000	7.6	850	0.74	1770	15000	
A 41 3_197.5	197.5	14.2	850	1.4	1360	15000	7.1	850	0.69	1790	15000	
A 41 3_217.4	217.4	12.9	850	1.3	1390	15000	6.4	850	0.63	1820	15000	
A 41 3_240.6	240.6	11.6	850	1.1	1410	15000	5.8	850	0.57	1840	15000	
A 41 3_262.5	262.5	10.7	850	1.0	1430	15000	5.3	850	0.52	1860	15000	
A 41 3_291.7	291.7	9.6	850	0.94	1450	15000	4.8	850	0.47	1880	15000	
A 41 3_324.2	324.2	8.6	850	0.84	1470	15000	4.3	850	0.42	1900	15000	
A 41 3_376.8	376.8	7.4	850	0.73	1500	15000	3.7	850	0.36	1930	15000	

Bonfiglioli Riduttori

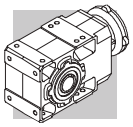

A 41 850 Nm

	i	n_1 = 900 min^{-1}					n_1 = 500 min^{-1}					
		n_2 min^{-1}	M_{n2} Nm	P_{n1} kW	R_{n1} N	R_{n2} N	n_2 min^{-1}	M_{n2} Nm	P_{n1} kW	R_{n1} N	R_{n2} N	
A 41 2_5.2	5.2	172	550	10.5	3140	6850	95	550	5.8	3500	8900	
A 41 2_7.1	7.1	126	550	7.7	3360	7870	70	550	4.3	3500	10100	
A 41 2_8.3	8.3	108	550	6.6	3440	8430	60	550	3.7	3500	10800	
A 41 2_9.2	9.2	98	550	6.0	3500	8800	54	550	3.3	3500	11300	
A 41 2_10.1	10.1	89	610	6.0	3500	8920	49	730	4.0	3500	10900	
A 41 2_11.7	11.7	77	550	4.7	3500	9760	43	550	2.6	3500	12400	
A 41 2_13.8	13.8	65	670	4.9	3500	9900	36	800	3.2	3500	12100	
A 41 2_16.1	16.1	56	700	4.4	3500	10500	31	830	2.9	3500	12800	
A 41 2_17.8	17.8	51	720	4.1	3500	10800	28.1	850	2.7	3500	13300	
A 41 2_22.7	22.7	40	780	3.4	3500	11700	22.0	850	2.1	3500	14800	
A 41 2_28.3	28.3	32	830	2.9	3500	12700	17.7	850	1.7	3500	15000	
A 41 2_35.9	35.9	25.1	850	2.4	3500	14000	13.9	850	1.3	3500	15000	
A 41 2_45.1	45.1	20.0	850	1.9	3500	15000	11.1	850	1.1	3500	15000	
A 41 2_48.3	48.3	18.6	850	1.8	3500	15000	10.4	850	0.98	3500	15000	
A 41 2_53.1	53.1	16.9	850	1.6	3500	15000	9.4	850	0.89	3500	15000	
A 41 2_58.8	58.8	15.3	850	1.4	3500	15000	8.5	850	0.81	3500	15000	293
A 41 2_64.2	64.2	14.0	850	1.3	3300	15000	7.8	850	0.74	3500	15000	
A 41 2_71.3	71.3	12.6	850	1.2	3500	15000	7.0	850	0.66	3500	15000	
A 41 2_79.2	79.2	11.4	800	1.0	3500	15000	6.3	800	0.56	3500	15000	
A 41 3_92.8	92.8	9.7	800	0.89	1080	15000	5.4	800	0.50	2110	15000	
A 41 3_115.9	115.9	7.8	850	0.76	1630	15000	4.3	850	0.42	2200	15000	
A 41 3_146.9	146.9	6.1	850	0.60	2020	15000	3.4	850	0.33	2200	15000	
A 41 3_184.4	184.4	4.9	850	0.48	2100	15000	2.7	850	0.27	2200	15000	
A 41 3_197.5	197.5	4.6	850	0.45	2120	15000	2.5	850	0.25	2200	15000	
A 41 3_217.4	217.4	4.1	850	0.40	2150	15000	2.3	850	0.22	2200	15000	
A 41 3_240.6	240.6	3.7	850	0.37	2170	15000	2.1	850	0.20	2200	15000	
A 41 3_262.5	262.5	3.4	850	0.34	2190	15000	1.9	850	0.19	2200	15000	
A 41 3_291.7	291.7	3.1	850	0.30	2200	15000	1.7	850	0.17	2200	15000	
A 41 3_324.2	324.2	2.8	850	0.27	2200	15000	1.5	850	0.15	2200	15000	
A 41 3_376.8	376.8	2.4	850	0.23	2200	15000	1.3	850	0.13	2200	15000	

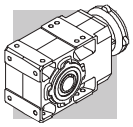

A 50 — 1500 Nm

	i	n_1 = 2800 min^{-1}					n_1 = 1400 min^{-1}					
		n_2 min^{-1}	M_{n2} Nm	P_{n1} kW	R_{n1} N	R_{n2} N	n_2 min^{-1}	M_{n2} Nm	P_{n1} kW	R_{n1} N	R_{n2} N	
A 50 2_7.7	7.7	362	550	22	2300	7920	181	700	14.1	2890	9960	
A 50 2_9.7	9.7	288	600	19.2	2330	8530	144	750	12.0	2950	10800	
A 50 2_13.1	13.1	214	600	14.3	2460	9600	107	750	8.9	3110	12100	
A 50 2_16.6	16.6	169	640	12.0	2490	10400	84	800	7.5	3150	13100	
A 50 2_20.9	20.9	134	640	9.5	2540	11400	67	800	6.0	3210	14400	
A 50 3_24.0	24.0	116	1150	15.4	1850	7020	58	1500	10.0	2100	8540	
A 50 3_26.4	26.4	106	1200	14.6	2100	7170	53	1500	9.1	2690	9100	
A 50 3_32.4	32.4	86	1290	12.8	1800	4630	43	1500	7.5	2760	10400	
A 50 3_35.6	35.6	79	1340	12.1	2080	7830	39	1500	6.8	3290	11000	
A 50 3_40.9	40.9	68	1415	11.1	1740	8130	34	1500	5.9	3220	11900	
A 50 3_45.0	45.0	62	1470	10.5	2030	8340	31	1500	5.4	3440	12600	
A 50 3_51.7	51.7	54	1500	9.4	1680	8970	27.1	1500	4.7	3400	13600	
A 50 3_56.8	56.8	49	1500	8.5	2150	9540	24.6	1500	4.3	3480	14400	
A 50 3_63.9	63.9	44	1500	7.6	1900	10300	21.9	1500	3.8	3450	15300	
A 50 3_70.2	70.2	40	1500	6.9	2350	10900	19.9	1500	3.4	3500	16100	
A 50 3_81.5	81.5	34	1500	5.9	2170	11900	17.2	1500	3.0	3500	17300	
A 50 3_89.5	89.5	31	1500	5.4	2590	12600	15.6	1500	2.7	3500	18200	
A 50 3_99.5	99.5	28.1	1500	4.9	2260	13400	14.1	1500	2.4	3500	19200	
A 50 3_109.4	109.4	25.6	1500	4.4	2680	14100	12.8	1500	2.2	3500	20000	
A 50 3_118.0	118.0	23.7	1500	4.1	2390	14700	11.9	1500	2.0	3500	20000	297
A 50 3_129.7	129.7	21.6	1500	3.7	2720	15400	10.8	1500	1.9	3500	20000	
A 50 3_140.6	140.6	19.9	1500	3.4	2440	16100	10.0	1500	1.7	3500	20000	
A 50 3_154.6	154.6	18.1	1500	3.1	2730	16900	9.1	1500	1.6	3500	20000	
A 50 3_173.4	173.4	16.2	1500	2.8	2480	17900	8.1	1500	1.4	3500	20000	
A 50 3_190.6	190.6	14.7	1500	2.5	2740	18800	7.3	1500	1.3	3500	20000	
A 50 4_211.0	211.0	13.3	1500	2.3	1930	20000	6.6	1500	1.2	2200	20000	
A 50 4_232.0	232.0	12.1	1500	2.1	1970	20000	6.0	1500	1.1	2200	20000	
A 50 4_260.9	260.9	10.7	1500	1.9	2010	20000	5.4	1500	0.95	2200	20000	
A 50 4_286.8	286.8	9.8	1500	1.7	2040	20000	4.9	1500	0.86	2200	20000	
A 50 4_332.6	332.6	8.4	1500	1.5	2080	20000	4.2	1500	0.74	2200	20000	
A 50 4_365.6	365.6	7.7	1500	1.4	2100	20000	3.8	1500	0.68	2200	20000	
A 50 4_406.4	406.4	6.9	1500	1.2	2130	20000	3.4	1500	0.61	2200	20000	
A 50 4_446.8	446.8	6.3	1500	1.1	2140	20000	3.1	1500	0.55	2200	20000	
A 50 4_481.6	481.6	5.8	1500	1.0	2160	20000	2.9	1500	0.51	2200	20000	
A 50 4_529.5	529.5	5.3	1500	0.93	2170	20000	2.6	1500	0.47	2200	20000	
A 50 4_574.2	574.2	4.9	1500	0.86	2190	20000	2.4	1500	0.43	2200	20000	
A 50 4_631.2	631.2	4.4	1500	0.78	2200	20000	2.2	1500	0.39	2200	20000	
A 50 4_707.9	707.9	4.0	1500	0.70	2200	20000	2.0	1500	0.35	2200	20000	
A 50 4_778.2	778.2	3.6	1500	0.63	2200	20000	1.8	1500	0.32	2200	20000	

Bonfiglioli Riduttori

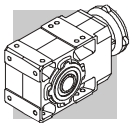

A 50 — 1500 Nm

	i	n_1 = 900 min^{-1}					n_1 = 500 min^{-1}					
		n_2 min^{-1}	M_{n2} Nm	P_{n1} kW	R_{n1} N	R_{n2} N	n_2 min^{-1}	M_{n2} Nm	P_{n1} kW	R_{n1} N	R_{n2} N	
A 50 2_7.7	7.7	116	770	10.0	3430	11700	65	900	6.5	3500	14300	
A 50 2_9.7	9.7	92	830	8.5	3490	12600	51	1000	5.7	3500	15300	
A 50 2_13.1	13.1	69	830	6.3	3500	14200	38	1000	4.2	3500	17300	
A 50 2_16.6	16.6	54	880	5.3	3500	15400	30	1000	3.4	3500	18900	
A 50 2_20.9	20.9	43	880	4.2	3500	16800	23.9	1000	2.7	3500	20000	
A 50 3_24.0	24.0	37	1500	6.5	3480	11300	20.8	1500	3.6	3500	15700	
A 50 3_26.4	26.4	34	1500	5.9	3500	12000	18.9	1500	3.3	3500	16500	
A 50 3_32.4	32.4	27.8	1500	4.8	3500	13400	15.4	1500	2.7	3500	18300	
A 50 3_35.6	35.6	25.3	1500	4.4	3500	14200	14.0	1500	2.4	3500	19200	
A 50 3_40.9	40.9	22.0	1500	3.8	3500	15300	12.2	1500	2.1	3500	20000	
A 50 3_45.0	45.0	20.0	1500	3.5	3500	16000	11.1	1500	1.9	3500	20000	
A 50 3_51.7	51.7	17.4	1500	3.0	3450	17200	9.7	1500	1.7	3500	20000	
A 50 3_56.8	56.8	15.8	1500	2.7	3500	18100	8.8	1500	1.5	3500	20000	
A 50 3_63.9	63.9	14.1	1500	2.4	3500	19200	7.8	1500	1.4	3500	20000	
A 50 3_70.2	70.2	12.8	1500	2.2	3500	20000	7.1	1500	1.2	3500	20000	
A 50 3_81.5	81.5	11.0	1500	1.9	3500	20000	6.1	1500	1.1	3500	20000	
A 50 3_89.5	89.5	10.1	1500	1.7	3500	20000	5.6	1500	0.96	3500	20000	
A 50 3_99.5	99.5	9.0	1500	1.6	3500	20000	5.0	1500	0.87	3500	20000	
A 50 3_109.4	109.4	8.2	1500	1.4	3500	20000	4.6	1500	0.79	3500	20000	
A 50 3_118.0	118.0	7.6	1500	1.3	3500	20000	4.2	1500	0.73	3500	20000	297
A 50 3_129.7	129.7	6.9	1500	1.2	3500	20000	3.9	1500	0.67	3500	20000	
A 50 3_140.6	140.6	6.4	1500	1.1	3500	20000	3.6	1500	0.61	3500	20000	
A 50 3_154.6	154.6	5.8	1500	1.0	3500	20000	3.2	1500	0.56	3500	20000	
A 50 3_173.4	173.4	5.2	1500	0.90	3500	20000	2.9	1500	0.50	3500	20000	
A 50 3_190.6	190.6	4.7	1500	0.82	3500	20000	2.6	1500	0.45	3500	20000	
A 50 4_211.0	211.0	4.3	1500	0.75	2200	20000	2.4	1500	0.42	2200	20000	
A 50 4_232.0	232.0	3.9	1500	0.68	2200	20000	2.2	1500	0.38	2200	20000	
A 50 4_260.9	260.9	3.4	1500	0.61	2200	20000	1.9	1500	0.34	2200	20000	
A 50 4_286.8	286.8	3.1	1500	0.55	2200	20000	1.7	1500	0.31	2200	20000	
A 50 4_332.6	332.6	2.7	1500	0.48	2200	20000	1.5	1500	0.27	2200	20000	
A 50 4_365.6	365.6	2.5	1500	0.43	2200	20000	1.4	1500	0.24	2200	20000	
A 50 4_406.4	406.4	2.2	1500	0.39	2200	20000	1.2	1500	0.22	2200	20000	
A 50 4_446.8	446.8	2.0	1500	0.36	2200	20000	1.1	1500	0.20	2200	20000	
A 50 4_481.6	481.6	1.9	1500	0.33	2200	20000	1.0	1500	0.18	2200	20000	
A 50 4_529.5	529.5	1.7	1500	0.30	2200	20000	0.94	1500	0.17	2200	20000	
A 50 4_574.2	574.2	1.6	1500	0.28	2200	20000	0.87	1500	0.15	2200	20000	
A 50 4_631.2	631.2	1.4	1500	0.25	2200	20000	0.79	1500	0.14	2200	20000	
A 50 4_707.9	707.9	1.3	1500	0.22	2200	20000	0.71	1500	0.12	2200	20000	
A 50 4_778.2	778.2	1.2	1500	0.20	2200	20000	0.64	1500	0.11	2200	20000	

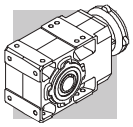

A 55 — 2000 Nm

	i	n_1 = 2800 min^{-1}					n_1 = 1400 min^{-1}					
		n_2 min^{-1}	M_{n2} Nm	P_{n1} kW	R_{n1} N	R_{n2} N	n_2 min^{-1}	M_{n2} Nm	P_{n1} kW	R_{n1} N	R_{n2} N	
A 55 2_4.9	4.9	571	760	48	1320	15100	286	900	28	2150	18700	301
A 55 2_6.4	6.4	438	800	39	1950	16400	219	950	23	2860	20300	
A 55 2_8.5	8.5	329	800	30	2810	18000	165	950	17.5	3500	22200	
A 55 2_10.4	10.4	269	840	25	2900	19100	135	1000	15.1	3500	23600	
A 55 2_13.1	13.1	214	840	20	3230	20600	107	1000	11.9	3500	25500	
A 55 2_15.7	15.7	178	840	16.7	3440	21900	89	1000	9.9	3500	27000	
A 55 2_19.2	19.2	146	925	15.0	3160	23200	73	1100	8.9	3500	28600	
A 55 3_23.8	23.8	118	1600	22	2050	21000	59	1950	13.2	2640	26000	
A 55 3_29.9	29.9	94	1700	18.3	2110	22500	47	2000	10.8	2770	28200	
A 55 3_40.3	40.3	69	1850	14.8	2150	24800	35	2000	8.0	2930	30000	
A 55 3_51.0	51.0	55	2000	12.6	2170	26500	27.5	2000	6.3	3050	30000	
A 55 3_64.3	64.3	44	2000	10.0	2230	29000	21.8	2000	5.0	3110	30000	
A 55 3_79.5	79.5	35	2000	8.1	1040	30000	17.6	2000	4.1	2820	30000	
A 55 3_101.4	101.4	27.6	2000	6.4	1340	30000	13.8	2000	3.2	3130	30000	
A 55 3_123.9	123.9	22.6	2000	5.2	1450	30000	11.3	2000	2.6	3230	30000	
A 55 3_132.7	132.7	21.1	2000	4.9	1450	30000	10.6	2000	2.4	3240	30000	
A 55 3_146.8	146.8	19.1	2000	4.4	1610	30000	9.5	2000	2.2	3290	30000	
A 55 3_160.4	160.4	17.5	2000	4.0	1660	30000	8.7	2000	2.0	3300	30000	
A 55 3_175.0	175.0	16.0	2000	3.7	1660	30000	8.0	2000	1.8	3300	30000	
A 55 3_194.2	194.2	14.4	2000	3.3	1710	30000	7.2	2000	1.7	3310	30000	
A 55 4_208.1	208.1	13.5	1600	2.5	1890	30000	6.7	1950	1.5	2200	30000	
A 55 4_262.6	262.6	10.7	1650	2.1	1980	30000	5.3	2000	1.3	2200	30000	
A 55 4_324.7	324.7	8.6	1750	1.8	2030	30000	4.3	2000	1.0	2200	30000	
A 55 4_414.0	414.0	6.8	1850	1.5	2080	30000	3.4	2000	0.80	2200	30000	
A 55 4_505.9	505.9	5.5	1900	1.2	2120	30000	2.8	2000	0.65	2200	30000	
A 55 4_542.0	542.0	5.2	1900	1.2	2140	30000	2.6	2000	0.61	2200	30000	
A 55 4_599.5	599.5	4.7	1950	1.1	2150	30000	2.3	2000	0.55	2200	30000	
A 55 4_655.1	655.1	4.3	1950	1.0	2180	30000	2.1	2000	0.50	2200	30000	
A 55 4_714.7	714.7	3.9	1950	0.90	2200	30000	2.0	2000	0.46	2200	30000	
A 55 4_793.0	793.0	3.5	2000	0.83	2200	30000	1.8	2000	0.42	2200	30000	

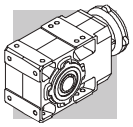

A 55 — 2000 Nm

	i	n_1 = 900 min^{-1}					n_1 = 500 min^{-1}					
		n_2 min^{-1}	M_{n2} Nm	P_{n1} kW	R_{n1} N	R_{n2} N	n_2 min^{-1}	M_{n2} Nm	P_{n1} kW	R_{n1} N	R_{n2} N	
A 55 2_4.9	4.9	184	1000	20	2850	21400	102	1160	13.1	3500	25600	301
A 55 2_6.4	6.4	141	1060	16.6	3500	23200	78	1230	10.7	3500	27700	
A 55 2_8.5	8.5	106	1060	12.6	3500	25400	59	1230	8.1	3500	30000	
A 55 2_10.4	10.4	87	1120	10.8	3500	27000	48	1290	6.9	3500	30000	
A 55 2_13.1	13.1	69	1120	8.6	3500	29100	38	1290	5.5	3500	30000	
A 55 2_15.7	15.7	57	1120	7.2	3500	30000	32	1290	4.6	3500	30000	
A 55 2_19.2	19.2	47	1230	6.4	3500	30000	26.0	1420	4.1	3500	30000	
A 55 3_23.8	23.8	38	2000	8.7	3280	30000	21.0	2000	4.8	3500	30000	
A 55 3_29.9	29.9	30	2000	6.9	3450	30000	16.7	2000	3.8	3500	30000	
A 55 3_40.3	40.3	22.3	2000	5.1	3500	30000	12.4	2000	2.9	3500	30000	
A 55 3_51.0	51.0	17.6	2000	4.1	3500	30000	9.8	2000	2.3	3500	30000	
A 55 3_64.3	64.3	14.0	2000	3.2	3500	30000	7.8	2000	1.8	3500	30000	
A 55 3_79.5	79.5	11.3	2000	2.6	3500	30000	6.3	2000	1.4	3500	30000	
A 55 3_101.4	101.4	8.9	2000	2.0	3500	30000	4.9	2000	1.1	3500	30000	
A 55 3_123.9	123.9	7.3	2000	1.7	3500	30000	4.0	2000	0.93	3500	30000	
A 55 3_132.7	132.7	6.8	2000	1.6	3500	30000	3.8	2000	0.87	3500	30000	
A 55 3_146.8	146.8	6.1	2000	1.4	3500	30000	3.4	2000	0.78	3500	30000	
A 55 3_160.4	160.4	5.6	2000	1.3	3500	30000	3.1	2000	0.72	3500	30000	
A 55 3_175.0	175.0	5.1	2000	1.2	3500	30000	2.9	2000	0.66	3500	30000	
A 55 3_194.2	194.2	4.6	2000	1.1	3500	30000	2.6	2000	0.59	3500	30000	
A 55 4_208.1	208.1	4.3	2000	1.0	2200	30000	2.4	2000	0.57	2200	30000	
A 55 4_262.6	262.6	3.4	2000	0.81	2200	30000	1.9	2000	0.45	2200	30000	
A 55 4_324.7	324.7	2.8	2000	0.65	2200	30000	1.5	2000	0.36	2200	30000	
A 55 4_414.0	414.0	2.2	2000	0.51	2200	30000	1.2	2000	0.28	2200	30000	
A 55 4_505.9	505.9	1.8	2000	0.42	2200	30000	1.0	2000	0.23	2200	30000	
A 55 4_542.0	542.0	1.7	2000	0.39	2200	30000	0.92	2000	0.22	2200	30000	
A 55 4_599.5	599.5	1.5	2000	0.35	2200	30000	0.83	2000	0.20	2200	30000	
A 55 4_655.1	655.1	1.4	2000	0.32	2200	30000	0.76	2000	0.18	2200	30000	
A 55 4_714.7	714.7	1.3	2000	0.30	2200	30000	0.70	2000	0.16	2200	30000	
A 55 4_793.0	793.0	1.1	2000	0.27	2200	30000	0.63	2000	0.15	2200	30000	

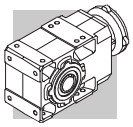

A 60 — 2800 Nm

	i	n_1 = 2800 min^{-1}					n_1 = 1400 min^{-1}					
		n_2 min^{-1}	M_{n2} Nm	P_{n1} kW	R_{n1} N	R_{n2} N	n_2 min^{-1}	M_{n2} Nm	P_{n1} kW	R_{n1} N	R_{n2} N	
A 60 2_7.9	7.9	356	950	38	2770	22500	178	1200	24	3400	27700	
A 60 2_10.3	10.3	271	950	29	2970	24600	136	1200	18.1	3740	30000	
A 60 2_12.7	12.7	220	1000	25	3020	26200	110	1250	15.3	3810	30000	
A 60 2_16.7	16.7	167	1050	19.6	3080	28600	84	1300	12.1	3910	30000	
A 60 2_20.6	20.6	136	1100	16.7	3100	30000	68	1400	10.6	3890	30000	
A 60 3_25.7	25.7	109	2760	35	2380	26900	54	2800	17.5	3800	30000	
A 60 3_27.9	27.9	101	2800	32	2780	27700	50	2800	16.2	3930	30000	
A 60 3_31.7	31.7	88	2800	29	2790	29000	44	2800	14.2	3940	30000	
A 60 3_34.3	34.3	82	2800	26	2920	30000	41	2800	13.2	4060	30000	
A 60 3_41.7	41.7	67	2800	22	2940	30000	34	2800	10.8	4090	30000	
A 60 3_45.2	45.2	62	2800	20	3060	30000	31	2800	10.0	4200	30000	
A 60 3_51.3	51.3	55	2800	17.6	3030	30000	27.3	2800	8.8	4180	30000	
A 60 3_55.6	55.6	50	2800	16.2	3140	30000	25.2	2800	8.1	4280	30000	
A 60 3_65.0	65.0	43	2800	13.9	3110	30000	21.5	2800	6.9	4260	30000	
A 60 3_70.4	70.4	40	2800	12.8	3210	30000	19.9	2800	6.4	4360	30000	
A 60 3_79.7	79.7	35	2800	11.3	3160	30000	17.6	2800	5.7	4310	30000	
A 60 3_86.4	86.4	32	2800	10.4	3260	30000	16.2	2800	5.2	4410	30000	
A 60 3_99.5	99.5	28.1	2800	9.1	3210	30000	14.1	2800	4.5	4360	30000	
A 60 3_107.8	107.8	26.0	2800	8.4	3300	30000	13.0	2800	4.2	4450	30000	
A 60 3_123.0	123.0	22.8	2800	7.3	3250	30000	11.4	2800	3.7	4400	30000	305
A 60 3_133.3	133.3	21.0	2800	6.8	3340	30000	10.5	2800	3.4	4490	30000	
A 60 3_144.0	144.0	19.4	2800	6.3	3280	30000	9.7	2800	3.1	4420	30000	
A 60 3_156.0	156.0	17.9	2800	5.8	3360	30000	9.0	2800	2.9	4510	30000	
A 60 3_171.5	171.5	16.3	2800	5.3	3290	30000	8.2	2800	2.6	4430	30000	
A 60 3_185.8	185.8	15.1	2800	4.9	3370	30000	7.5	2800	2.4	4520	30000	
A 60 4_208.7	208.7	13.4	2800	4.4	2720	30000	6.7	2800	2.2	3500	30000	
A 60 4_226.1	226.1	12.4	2800	4.1	2770	30000	6.2	2800	2.0	3500	30000	
A 60 4_264.3	264.3	10.6	2800	3.5	2860	30000	5.3	2800	1.7	3500	30000	
A 60 4_286.3	286.3	9.8	2800	3.2	2900	30000	4.9	2800	1.6	3500	30000	
A 60 4_324.2	324.2	8.6	2800	2.8	2960	30000	4.3	2800	1.4	3500	30000	
A 60 4_351.2	351.2	8.0	2800	2.6	2990	30000	4.0	2800	1.3	3500	30000	
A 60 4_404.7	404.7	6.9	2800	2.3	3050	30000	3.5	2800	1.1	3500	30000	
A 60 4_438.4	438.4	6.4	2800	2.1	3070	30000	3.2	2800	1.1	3500	30000	
A 60 4_500.3	500.3	5.6	2800	1.8	3110	30000	2.8	2800	0.92	3500	30000	
A 60 4_542.0	542.0	5.2	2800	1.7	3140	30000	2.6	2800	0.85	3500	30000	
A 60 4_585.8	585.8	4.8	2800	1.6	3150	30000	2.4	2800	0.79	3500	30000	
A 60 4_634.6	634.6	4.4	2800	1.5	3170	30000	2.2	2800	0.73	3500	30000	
A 60 4_697.3	697.3	4.0	2800	1.3	3190	30000	2.0	2800	0.66	3500	30000	
A 60 4_755.4	755.4	3.7	2800	1.2	3210	30000	1.9	2800	0.61	3500	30000	

Bonfiglioli Riduttori

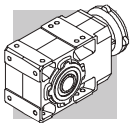

A 60 — 2800 Nm

	i	n_1 = 900 min^{-1}					n_1 = 500 min^{-1}					
		n_2 min^{-1}	M_{n2} Nm	P_{n1} kW	R_{n1} N	R_{n2} N	n_2 min^{-1}	M_{n2} Nm	P_{n1} kW	R_{n1} N	R_{n2} N	
A 60 2_7.9	7.9	114	1300	16.6	4190	30000	64	1550	11.0	4700	30000	
A 60 2_10.3	10.3	87	1300	12.6	4470	30000	48	1550	8.4	4700	30000	
A 60 2_12.7	12.7	71	1400	11.0	4490	30000	39	1700	7.5	4700	30000	
A 60 2_16.7	16.7	54	1450	8.7	4610	30000	29.9	1700	5.7	4700	30000	
A 60 2_20.6	20.6	44	1550	7.5	4600	30000	24.3	1800	4.9	4700	30000	
A 60 3_25.7	25.7	35	2800	11.3	4680	30000	19.4	2800	6.3	4700	30000	
A 60 3_27.9	27.9	32	2800	10.4	4700	30000	18.0	2800	5.8	4700	30000	
A 60 3_31.7	31.7	28.4	2800	9.2	4700	30000	15.8	2800	5.1	4700	30000	
A 60 3_34.3	34.3	26.2	2800	8.5	4700	30000	14.6	2800	4.7	4700	30000	
A 60 3_41.7	41.7	21.6	2800	7.0	4700	30000	12.0	2800	3.9	4700	30000	
A 60 3_45.2	45.2	19.9	2800	6.4	4700	30000	11.1	2800	3.6	4700	30000	
A 60 3_51.3	51.3	17.5	2800	5.6	4700	30000	9.7	2800	3.1	4700	30000	
A 60 3_55.6	55.6	16.2	2800	5.2	4700	30000	9.0	2800	2.9	4700	30000	
A 60 3_65.0	65.0	13.8	2800	4.5	4700	30000	7.7	2800	2.5	4700	30000	
A 60 3_70.4	70.4	12.8	2800	4.1	4700	30000	7.1	2800	2.3	4700	30000	
A 60 3_79.7	79.7	11.3	2800	3.6	4700	30000	6.3	2800	2.0	4700	30000	
A 60 3_86.4	86.4	10.4	2800	3.4	4700	30000	5.8	2800	1.9	4700	30000	
A 60 3_99.5	99.5	9.0	2800	2.9	4700	30000	5.0	2800	1.6	4700	30000	
A 60 3_107.8	107.8	8.3	2800	2.7	4700	30000	4.6	2800	1.5	4700	30000	
A 60 3_123.0	123.0	7.3	2800	2.4	4700	30000	4.1	2800	1.3	4700	30000	305
A 60 3_133.3	133.3	6.8	2800	2.2	4700	30000	3.8	2800	1.2	4700	30000	
A 60 3_144.0	144.0	6.2	2800	2.0	4700	30000	3.5	2800	1.1	4700	30000	
A 60 3_156.0	156.0	5.8	2800	1.9	4700	30000	3.2	2800	1.0	4700	30000	
A 60 3_171.5	171.5	5.2	2800	1.7	4700	30000	2.9	2800	0.94	4700	30000	
A 60 3_185.8	185.8	4.8	2800	1.6	4700	30000	2.7	2800	0.87	4700	30000	
A 60 4_208.7	208.7	4.3	2800	1.4	3500	30000	2.4	2800	0.79	3500	30000	
A 60 4_226.1	226.1	4.0	2800	1.3	3500	30000	2.2	2800	0.73	3500	30000	
A 60 4_264.3	264.3	3.4	2800	1.1	3500	30000	1.9	2800	0.62	3500	30000	
A 60 4_286.3	286.3	3.1	2800	1.0	3500	30000	1.7	2800	0.58	3500	30000	
A 60 4_324.2	324.2	2.8	2800	0.91	3500	30000	1.5	2800	0.51	3500	30000	
A 60 4_351.2	351.2	2.6	2800	0.84	3500	30000	1.4	2800	0.47	3500	30000	
A 60 4_404.7	404.7	2.2	2800	0.73	3500	30000	1.2	2800	0.41	3500	30000	
A 60 4_438.4	438.4	2.1	2800	0.68	3500	30000	1.1	2800	0.38	3500	30000	
A 60 4_500.3	500.3	1.8	2800	0.59	3500	30000	1.0	2800	0.33	3500	30000	
A 60 4_542.0	542.0	1.7	2800	0.55	3500	30000	0.92	2800	0.30	3500	30000	
A 60 4_585.8	585.8	1.5	2800	0.51	3500	30000	0.85	2800	0.28	3500	30000	
A 60 4_634.6	634.6	1.4	2800	0.47	3500	30000	0.79	2800	0.26	3500	30000	
A 60 4_697.3	697.3	1.3	2800	0.43	3500	30000	0.72	2800	0.24	3500	30000	
A 60 4_755.4	755.4	1.2	2800	0.39	3500	30000	0.66	2800	0.22	3500	30000	

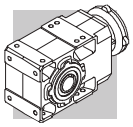

A 70 — 5000 Nm

	i	n_1 = 2800 min^{-1}					n_1 = 1400 min^{-1}					
		n_2 min^{-1}	M_{n2} Nm	P_{n1} kW	R_{n1} N	R_{n2} N	n_2 min^{-1}	M_{n2} Nm	P_{n1} kW	R_{n1} N	R_{n2} N	
A 70 3_9.4	9.4	297	2300	79	1900	25900	148	2800	48	2550	31900	309
A 70 3_10.2	10.2	274	2400	76	2480	26400	137	3200	50	1480	31900	
A 70 3_12.1	12.1	232	2400	64	2420	28000	116	3200	43	1400	33900	
A 70 3_13.1	13.1	214	2600	64	2420	28400	107	3350	41	2100	34600	
A 70 3_15.4	15.4	182	2700	56	2100	29900	91	3350	35	2430	36700	
A 70 3_16.7	16.7	168	2850	55	2500	30400	84	3600	35	2590	37200	
A 70 3_19.7	19.7	142	2900	48	2030	32100	71	3700	30	1790	39300	
A 70 3_21.3	21.3	131	3000	45	2750	32900	66	4000	30	1830	39800	
A 70 3_23.5	23.5	119	3500	48	4930	32900	60	4300	30	6250	40500	
A 70 3_27.8	27.8	101	3450	40	4960	35100	50	4200	24	6300	43300	
A 70 3_30.1	30.1	93	3700	40	4970	35600	47	4550	24	6300	43900	
A 70 3_35.4	35.4	79	3650	33	5040	37900	40	4500	21	6370	46600	
A 70 3_38.4	38.4	73	3950	33	5040	38400	36	4850	20	6380	47300	
A 70 3_45.2	45.2	62	3900	28	5050	40800	31	4800	17.1	6400	50000	
A 70 3_49.0	49.0	57	4250	28	5050	41300	28.6	5000	16.4	6450	50000	
A 70 3_53.2	53.2	53	4100	25	5030	42900	26.3	5000	15.1	6380	50000	
A 70 3_57.7	57.7	49	4450	25	5030	43400	24.3	5000	14.0	6490	50000	
A 70 3_66.9	66.9	42	4350	21	5050	46000	20.9	5000	12.0	6480	50000	
A 70 3_72.5	72.5	39	4750	21	5040	46500	19.3	5000	11.1	6580	50000	
A 70 3_79.3	79.3	35	4600	18.7	5020	48400	17.6	5000	10.2	6520	50000	
A 70 3_85.9	85.9	33	4950	18.6	5030	49100	16.3	5000	9.4	6620	50000	
A 70 3_96.2	96.2	29.1	4850	16.2	5000	50000	14.6	5000	8.4	6570	50000	
A 70 3_104.2	104.2	26.9	5000	15.5	5060	50000	13.4	5000	7.7	6660	50000	
A 70 3_120.6	120.6	23.2	5000	13.4	5010	50000	11.6	5000	6.7	6610	50000	
A 70 3_130.7	130.7	21.4	5000	12.3	5100	50000	10.7	5000	6.2	6690	50000	
A 70 3_141.9	141.9	19.7	5000	11.4	5040	50000	9.9	5000	5.7	6640	50000	
A 70 3_153.7	153.7	18.2	3300	6.9	5410	50000	9.1	4050	4.2	6920	50000	
A 70 4_169.8	169.8	16.5	5000	9.7	1130	50000	8.2	5000	4.9	2520	50000	
A 70 4_183.9	183.9	15.2	5000	9.0	1450	50000	7.6	5000	4.5	2670	50000	
A 70 4_220.3	220.3	12.7	5000	7.5	1560	50000	6.4	5000	3.7	2710	50000	
A 70 4_238.6	238.6	11.7	5000	6.9	1860	50000	5.9	5000	3.5	2770	50000	
A 70 4_292.0	292.0	9.6	5000	5.6	1900	50000	4.8	5000	2.8	2790	50000	
A 70 4_316.4	316.4	8.9	5000	5.2	2110	50000	4.4	5000	2.6	2850	50000	
A 70 4_369.4	369.4	7.6	5000	4.5	2110	50000	3.8	5000	2.2	2840	50000	
A 70 4_400.2	400.2	7.0	5000	4.1	2160	50000	3.5	5000	2.1	2900	50000	
A 70 4_475.8	475.8	5.9	5000	3.5	2150	50000	2.9	5000	1.7	2890	50000	
A 70 4_515.4	515.4	5.4	5000	3.2	2200	50000	2.7	5000	1.6	2940	50000	
A 70 4_595.0	595.0	4.7	5000	2.8	2190	50000	2.4	5000	1.4	2920	50000	
A 70 4_644.6	644.6	4.3	5000	2.6	2230	50000	2.2	5000	1.3	2970	50000	
A 70 4_705.1	705.1	4.0	5000	2.3	2200	50000	2.0	5000	1.2	2940	50000	
A 70 4_763.9	763.9	3.7	5000	2.2	2250	50000	1.8	5000	1.1	2990	50000	
A 70 4_855.3	855.3	3.3	5000	1.9	2220	50000	1.6	5000	0.96	2960	50000	
A 70 4_926.5	926.5	3.0	5000	1.8	2270	50000	1.5	5000	0.89	3000	50000	
A 70 4_1072	1072	2.6	5000	1.5	2240	50000	1.3	5000	0.77	2970	50000	
A 70 4_1161	1161	2.4	5000	1.4	2280	50000	1.2	5000	0.71	3020	50000	
A 70 4_1242	1242	2.3	5000	1.3	2250	50000	1.1	5000	0.66	2980	50000	
A 70 4_1346	1346	2.1	5000	1.2	2290	50000	1.0	5000	0.61	3030	50000	
A 70 4_1583	1583	1.8	5000	1.0	2260	50000	0.88	5000	0.52	2990	50000	
A 70 4_1715	1715	1.6	5000	0.96	2300	50000	0.82	5000	0.48	3040	50000	

Bonfiglioli Riduttori

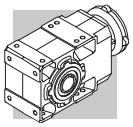

A 70 — 5000 Nm

	i	n_1 = 900 min^{-1}					n_1 = 500 min^{-1}					
		n_2 min^{-1}	M_{n2} Nm	P_{n1} kW	R_{n1} N	R_{n2} N	n_2 min^{-1}	M_{n2} Nm	P_{n1} kW	R_{n1} N	R_{n2} N	
A 70 3_9.4	9.4	95	3000	33	4290	36900	53	3000	18.3	7000	45400	309
A 70 3_10.2	10.2	88	3250	33	4290	37400	49	3250	18.3	7000	46100	
A 70 3_12.1	12.1	75	3650	31	1620	38700	41	3650	17.4	6470	47900	
A 70 3_13.1	13.1	69	3950	31	1650	39200	38	3950	17.4	6500	48600	
A 70 3_15.4	15.4	58	3700	25	3510	42200	32	3700	13.8	7000	50000	
A 70 3_16.7	16.7	54	4000	25	3560	42800	30	4000	13.8	7000	50000	
A 70 3_19.7	19.7	46	3700	19.5	4910	46100	25.4	3700	10.8	7000	50000	
A 70 3_21.3	21.3	42	4000	19.4	4950	46800	23.5	4000	10.8	7000	50000	
A 70 3_23.5	23.5	38	4900	21.6	7000	46300	21.3	5000	12.2	7000	50000	
A 70 3_27.8	27.8	32	4800	17.9	7000	49400	18.0	5000	10.4	7000	50000	
A 70 3_30.1	30.1	29.9	5000	17.2	7000	50000	16.6	5000	9.6	7000	50000	
A 70 3_35.4	35.4	25.4	5000	14.6	7000	50000	14.1	5000	8.1	7000	50000	
A 70 3_38.4	38.4	23.4	5000	13.5	7000	50000	13.0	5000	7.5	7000	50000	
A 70 3_45.2	45.2	19.9	5000	11.4	7000	50000	11.1	5000	6.4	7000	50000	
A 70 3_49.0	49.0	18.4	5000	10.6	7000	50000	10.2	5000	5.9	7000	50000	
A 70 3_53.2	53.2	16.9	5000	9.7	7000	50000	9.4	5000	5.4	7000	50000	
A 70 3_57.7	57.7	15.6	5000	9.0	7000	50000	8.7	5000	5.0	7000	50000	
A 70 3_66.9	66.9	13.4	5000	7.7	7000	50000	7.5	5000	4.3	7000	50000	
A 70 3_72.5	72.5	12.4	5000	7.1	7000	50000	6.9	5000	4.0	7000	50000	
A 70 3_79.3	79.3	11.3	5000	6.5	7000	50000	6.3	5000	3.6	7000	50000	
A 70 3_85.9	85.9	10.5	5000	6.0	7000	50000	5.8	5000	3.3	7000	50000	
A 70 3_96.2	96.2	9.4	5000	5.4	7000	50000	5.2	5000	3.0	7000	50000	
A 70 3_104.2	104.2	8.6	5000	5.0	7000	50000	4.8	5000	2.8	7000	50000	
A 70 3_120.6	120.6	7.5	5000	4.3	7000	50000	4.1	5000	2.4	7000	50000	
A 70 3_130.7	130.7	6.9	5000	4.0	7000	50000	3.8	5000	2.2	7000	50000	
A 70 3_141.9	141.9	6.3	5000	3.7	7000	50000	3.5	5000	2.0	7000	50000	
A 70 3_153.7	153.7	5.9	4600	3.1	7000	50000	3.3	5000	1.9	7000	50000	
A 70 4_169.8	169.8	5.3	5000	3.1	3170	50000	2.9	5000	1.7	3500	50000	
A 70 4_183.9	183.9	4.9	5000	2.9	3240	50000	2.7	5000	1.6	3500	50000	
A 70 4_220.3	220.3	4.1	5000	2.4	3270	50000	2.3	5000	1.3	3500	50000	
A 70 4_238.6	238.6	3.8	5000	2.2	3340	50000	2.1	5000	1.2	3500	50000	
A 70 4_292.0	292.0	3.1	5000	1.8	3350	50000	1.7	5000	1.0	3500	50000	
A 70 4_316.4	316.4	2.8	5000	1.7	3410	50000	1.6	5000	0.93	3500	50000	
A 70 4_369.4	369.4	2.4	5000	1.4	3410	50000	1.4	5000	0.80	3500	50000	
A 70 4_400.2	400.2	2.2	5000	1.3	3460	50000	1.2	5000	0.74	3500	50000	
A 70 4_475.8	475.8	1.9	5000	1.1	3450	50000	1.1	5000	0.62	3500	50000	
A 70 4_515.4	515.4	1.7	5000	1.0	3500	50000	0.97	5000	0.57	3500	50000	
A 70 4_595.0	595.0	1.5	5000	0.89	3480	50000	0.84	5000	0.49	3500	50000	
A 70 4_644.6	644.6	1.4	5000	0.82	3500	50000	0.78	5000	0.46	3500	50000	
A 70 4_705.1	705.1	1.3	5000	0.75	3500	50000	0.71	5000	0.42	3500	50000	
A 70 4_763.9	763.9	1.2	5000	0.69	3500	50000	0.65	5000	0.39	3500	50000	
A 70 4_855.3	855.3	1.1	5000	0.62	3500	50000	0.58	5000	0.34	3500	50000	
A 70 4_926.5	926.5	0.97	5000	0.57	3500	50000	0.54	5000	0.32	3500	50000	
A 70 4_1072	1072	0.84	5000	0.49	3500	50000	0.47	5000	0.27	3500	50000	
A 70 4_1161	1161	0.77	5000	0.46	3500	50000	0.43	5000	0.25	3500	50000	
A 70 4_1242	1242	0.72	5000	0.43	3500	50000	0.40	5000	0.24	3500	50000	
A 70 4_1346	1346	0.67	5000	0.39	3500	50000	0.37	5000	0.22	3500	50000	
A 70 4_1583	1583	0.57	5000	0.33	3500	50000	0.32	5000	0.19	3500	50000	
A 70 4_1715	1715	0.52	5000	0.31	3500	50000	0.29	5000	0.17	3500	50000	

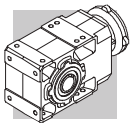

A 80 — 8000 Nm

	i	n_1 = 2800 min^{-1}					n_1 = 1400 min^{-1}					
		n_2 min^{-1}	M_{n2} Nm	P_{n1} kW	R_{n1} N	R_{n2} N	n_2 min^{-1}	M_{n2} Nm	P_{n1} kW	R_{n1} N	R_{n2} N	
A 80 3_9.8	9.8	285	3100	102	—	26300	142	3900	64	—	32100	312
A 80 3_10.7	10.7	263	3450	104	—	26300	131	4300	65	—	32300	
A 80 3_12.3	12.3	228	3450	91	—	27700	114	4300	56	—	34000	
A 80 3_13.3	13.3	211	3450	84	1150	28700	105	4300	52	1150	35200	
A 80 3_15.5	15.5	181	3300	69	1560	30600	91	4100	43	1730	37600	
A 80 3_16.7	16.7	167	3600	69	1440	30900	84	4500	43	1460	37900	
A 80 3_19.3	19.3	145	3500	58	1870	32800	72	4400	37	1880	40200	
A 80 3_20.9	20.9	134	3840	59	1670	33100	67	4800	37	1740	40600	
A 80 3_22.6	22.6	124	5050	72	4500	31200	62	6250	45	5830	38400	
A 80 3_24.5	24.5	114	5500	72	4470	31300	57	6750	44	5840	38600	
A 80 3_28.2	28.2	99	5350	61	4700	33500	50	6600	38	5960	41200	
A 80 3_30.6	30.6	92	5250	55	4840	34900	46	6450	34	6140	43000	
A 80 3_35.5	35.5	79	5700	52	4700	36000	39	7000	32	6000	44300	
A 80 3_38.5	38.5	73	6150	51	4720	36200	36	7600	32	6000	44500	
A 80 3_44.5	44.5	63	6050	44	4790	38600	31	7450	27	6070	47500	
A 80 3_48.2	48.2	58	6550	44	4790	38800	29.1	8000	27	6090	47900	
A 80 3_55.2	55.2	51	6400	37	4710	41300	25.4	7900	23	6050	50800	
A 80 3_59.8	59.8	47	6950	37	4690	41500	23.4	8000	22	6170	52300	
A 80 3_66.8	66.8	42	6800	33	4670	43700	21.0	8000	19.3	6150	54600	
A 80 3_72.4	72.4	39	7350	33	4680	44000	19.3	8000	17.8	6280	56500	
A 80 3_82.3	82.3	34	7200	28	4570	46600	17.0	8000	15.7	6230	59300	
A 80 3_89.2	89.2	31	7800	28	4570	46900	15.7	8000	14.5	6350	61400	
A 80 3_96.0	96.0	29.2	7500	25	4410	48900	14.6	8000	13.4	6260	63000	
A 80 3_104.0	104.0	26.9	8000	25	4500	49500	13.5	8000	12.4	6380	65000	
A 80 3_116.0	116.0	24.1	7950	22	4230	51700	12.1	8000	11.1	6300	65000	
A 80 3_125.6	125.6	22.3	8000	21	4630	53400	11.1	8000	10.3	6420	65000	
A 80 3_144.7	144.7	19.3	8000	17.8	4320	56400	9.7	8000	8.9	6350	65000	
A 80 3_156.8	156.8	17.9	8000	16.4	4750	58300	8.9	8000	8.2	6460	65000	
A 80 4_171.3	171.3	16.3	8000	15.4	—	65000	8.2	8000	7.7	1230	65000	
A 80 4_214.7	214.7	13.0	8000	12.3	—	65000	6.5	8000	6.1	1400	65000	
A 80 4_232.6	232.6	12.0	8000	11.3	—	65000	6.0	8000	5.7	1810	65000	
A 80 4_277.3	277.3	10.1	8000	9.5	540	65000	5.0	8000	4.8	1930	65000	
A 80 4_300.4	300.4	9.3	8000	8.8	900	65000	4.7	8000	4.4	2290	65000	
A 80 4_354.0	354.0	7.9	8000	7.4	800	65000	4.0	8000	3.7	2190	65000	
A 80 4_383.5	383.5	7.3	8000	6.9	1140	65000	3.7	8000	3.4	2530	65000	
A 80 4_442.1	442.1	6.3	8000	6.0	1040	65000	3.2	8000	3.0	2430	65000	
A 80 4_478.9	478.9	5.8	8000	5.5	1370	65000	2.9	8000	2.8	2670	65000	
A 80 4_560.5	560.5	5.0	8000	4.7	1240	65000	2.5	8000	2.4	2630	65000	
A 80 4_607.2	607.2	4.6	8000	4.3	1550	65000	2.3	8000	2.2	2720	65000	
A 80 4_703.5	703.5	4.0	8000	3.7	1440	65000	2.0	8000	1.9	2690	65000	
A 80 4_762.1	762.1	3.7	8000	3.5	1730	65000	1.8	8000	1.7	2760	65000	
A 80 4_829.5	829.5	3.4	8000	3.2	1530	65000	1.7	8000	1.6	2720	65000	
A 80 4_898.7	898.7	3.1	8000	2.9	1820	65000	1.6	8000	1.5	2780	65000	
A 80 4_1001	1001	2.8	8000	2.6	1620	65000	1.4	8000	1.3	2740	65000	
A 80 4_1085	1085	2.6	8000	2.4	1900	65000	1.3	8000	1.2	2800	65000	
A 80 4_1237	1237	2.3	8000	2.1	1660	65000	1.1	8000	1.1	2750	65000	
A 80 4_1340	1340	2.1	8000	2.0	1940	65000	1.0	8000	0.98	2810	65000	
A 80 4_1438	1438	1.9	8000	1.8	1730	65000	0.97	8000	0.92	2770	65000	
A 80 4_1558	1558	1.8	8000	1.7	2000	65000	0.90	8000	0.85	2830	65000	

(—) Contact our technical service department advising radial load data (rotation direction, orientation, position)

Bonfiglioli Riduttori

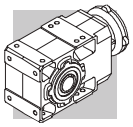

A 80 — 8000 Nm

	i	n_1 = 900 min^{-1}					n_1 = 500 min^{-1}					
		n_2 min^{-1}	M_{n2} Nm	P_{n1} kW	R_{n1} N	R_{n2} N	n_2 min^{-1}	M_{n2} Nm	P_{n1} kW	R_{n1} N	R_{n2} N	
A 80 3_9.8	9.8	92	4450	47	—	36700	51	5300	31	—	43800	312
A 80 3_10.7	10.7	84	4900	48	—	36900	47	5850	32	—	44000	
A 80 3_12.3	12.3	73	4900	41	—	38900	41	5850	27	—	46400	
A 80 3_13.3	13.3	68	4900	38	1360	40200	38	5850	25	1600	47900	
A 80 3_15.5	15.5	58	4650	31	2130	43000	32	5550	21	2530	51300	
A 80 3_16.7	16.7	54	5100	32	1840	43400	29.9	6100	21	2120	51700	
A 80 3_19.3	19.3	47	5000	27	2260	46000	25.9	6000	17.9	2530	54800	
A 80 3_20.9	20.9	43	5470	27	2030	46400	23.9	6500	17.9	2530	55400	
A 80 3_22.6	22.6	40	7100	33	6810	43900	22.1	8000	20.4	7000	53400	
A 80 3_24.5	24.5	37	7700	33	6800	44100	20.4	8000	18.8	7000	55300	
A 80 3_28.2	28.2	32	7550	28	6940	47000	17.7	8000	16.3	7000	58400	
A 80 3_30.6	30.6	29.4	7400	25	7000	49000	16.4	8000	15.1	7000	60400	
A 80 3_35.5	35.5	25.3	8000	23	6980	50600	14.1	8000	13.0	7000	63900	
A 80 3_38.5	38.5	23.4	8000	22	7000	52400	13.0	8000	12.0	7000	65000	
A 80 3_44.5	44.5	20.2	8000	18.6	7000	55400	11.2	8000	10.3	7000	65000	
A 80 3_48.2	48.2	18.7	8000	17.2	7000	57300	10.4	8000	9.6	7000	65000	
A 80 3_55.2	55.2	16.3	8000	15.0	7000	60300	9.1	8000	8.3	7000	65000	
A 80 3_59.8	59.8	15.1	8000	13.9	7000	62300	8.4	8000	7.7	7000	65000	
A 80 3_66.8	66.8	13.5	8000	12.4	7000	65000	7.5	8000	6.9	7000	65000	
A 80 3_72.4	72.4	12.4	8000	11.4	7000	65000	6.9	8000	6.4	7000	65000	
A 80 3_82.3	82.3	10.9	8000	10.1	7000	65000	6.1	8000	5.6	7000	65000	
A 80 3_89.2	89.2	10.1	8000	9.3	7000	65000	5.6	8000	5.2	7000	65000	
A 80 3_96.0	96.0	9.4	8000	8.6	7000	65000	5.2	8000	4.8	7000	65000	
A 80 3_104.0	104.0	8.7	8000	8.0	7000	65000	4.8	8000	4.4	7000	65000	
A 80 3_116.0	116.0	7.8	8000	7.1	7000	65000	4.3	8000	4.0	7000	65000	
A 80 3_125.6	125.6	7.2	8000	6.6	7000	65000	4.0	8000	3.7	7000	65000	
A 80 3_144.7	144.7	6.2	8000	5.7	7000	65000	3.5	8000	3.2	7000	65000	
A 80 3_156.8	156.8	5.7	8000	5.3	7000	65000	3.2	8000	2.9	7000	65000	
A 80 4_171.3	171.3	5.3	8000	4.9	2300	65000	2.9	8000	2.7	3500	65000	
A 80 4_214.7	214.7	4.2	8000	3.9	2470	65000	2.3	8000	2.2	3500	65000	
A 80 4_232.6	232.6	3.9	8000	3.6	2870	65000	2.1	8000	2.0	3500	65000	
A 80 4_277.3	277.3	3.2	8000	3.1	3000	65000	1.8	8000	1.7	3500	65000	
A 80 4_300.4	300.4	3.0	8000	2.8	3120	65000	1.7	8000	1.6	3500	65000	
A 80 4_354.0	354.0	2.5	8000	2.4	3100	65000	1.4	8000	1.3	3500	65000	
A 80 4_383.5	383.5	2.3	8000	2.2	3180	65000	1.3	8000	1.2	3500	65000	
A 80 4_442.1	442.1	2.0	8000	1.9	3160	65000	1.1	8000	1.1	3500	65000	
A 80 4_478.9	478.9	1.9	8000	1.8	3230	65000	1.0	8000	0.98	3500	65000	
A 80 4_560.5	560.5	1.6	8000	1.5	3210	65000	0.89	8000	0.84	3500	65000	
A 80 4_607.2	607.2	1.5	8000	1.4	3280	65000	0.82	8000	0.78	3500	65000	
A 80 4_703.5	703.5	1.3	8000	1.2	3260	65000	0.71	8000	0.67	3500	65000	
A 80 4_762.1	762.1	1.2	8000	1.1	3320	65000	0.66	8000	0.62	3500	65000	
A 80 4_829.5	829.5	1.1	8000	1.0	3280	65000	0.60	8000	0.57	3500	65000	
A 80 4_898.7	898.7	1.0	8000	0.94	3340	65000	0.56	8000	0.52	3500	65000	
A 80 4_1001	1001	0.90	8000	0.85	3300	65000	0.50	8000	0.47	3500	65000	
A 80 4_1085	1085	0.83	8000	0.78	3360	65000	0.46	8000	0.43	3500	65000	
A 80 4_1237	1237	0.73	8000	0.68	3310	65000	0.40	8000	0.38	3500	65000	
A 80 4_1340	1340	0.67	8000	0.63	3370	65000	0.37	8000	0.35	3500	65000	
A 80 4_1438	1438	0.63	8000	0.59	3330	65000	0.35	8000	0.33	3500	65000	
A 80 4_1558	1558	0.58	8000	0.54	3390	65000	0.32	8000	0.30	3500	65000	

(—) Contact our technical service department advising radial load data (rotation direction, orientation, position)

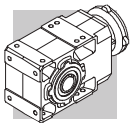

A 90 — 14000 Nm

	i	n_1 = 2800 min^{-1}					n_1 = 1400 min^{-1}					
		n_2 min^{-1}	M_{n2} Nm	P_{n1} kW	R_{n1} N	R_{n2} N	n_2 min^{-1}	M_{n2} Nm	P_{n1} kW	R_{n1} N	R_{n2} N	
A 90 3_9.7	9.7	289	7800	260	2440	27600	145	9050	151	5520	35000	
A 90 3_10.5	10.5	267	8350	257	2620	27700	134	9800	151	5530	34900	
A 90 3_12.6	12.6	221	8500	217	2700	29800	111	10450	133	4790	36700	
A 90 3_13.7	13.7	204	8050	189	4670	31800	102	11150	131	5060	36900	
A 90 3_15.6	15.6	180	8900	184	3240	32000	90	10950	113	5410	39400	
A 90 3_16.9	16.9	166	9650	184	3230	31900	83	11850	113	5440	39300	
A 90 3_19.4	19.4	144	9400	156	3160	34300	72	11550	96	5350	42300	
A 90 3_21.0	21.0	133	10150	156	3210	34300	67	12400	95	5510	42400	
A 90 3_22.3	22.3	126	9850	143	9660	35700	63	12150	88	12200	43900	
A 90 3_24.1	24.1	116	10700	143	9660	35500	58	13150	88	12200	43800	
A 90 3_29.1	29.1	96	10550	117	9800	38900	48	13000	72	12400	47900	
A 90 3_31.5	31.5	89	11450	117	9800	38800	44	14000	72	12400	47900	
A 90 3_35.8	35.8	78	11150	100	9910	41600	39	13750	62	12500	51100	
A 90 3_38.8	38.8	72	12100	100	9900	41500	36	14000	58	12700	52700	
A 90 3_44.6	44.6	63	11800	85	9920	44600	31	14000	51	12700	56000	
A 90 3_48.3	48.3	58	12800	85	9920	44500	29.0	14000	47	12800	58000	
A 90 3_55.0	55.0	51	12550	73	9960	47500	25.4	14000	41	12800	61400	
A 90 3_59.6	59.6	47	13550	73	9970	47500	23.5	14000	38	13000	63500	
A 90 3_68.8	68.8	41	13350	63	9960	50900	20.4	14000	33	13000	67400	
A 90 3_74.5	74.5	38	14000	61	10000	51700	18.8	14000	30	13100	69700	
A 90 3_80.4	80.4	35	13900	56	9920	53500	17.4	14000	28	13000	71900	
A 90 3_87.1	87.1	32	14000	52	10100	55500	16.1	14000	26	13200	74300	
A 90 3_98.6	98.6	28.4	14000	46	9990	58500	14.2	14000	23	13100	75000	
A 90 3_106.8	106.8	26.2	14000	42	10100	60600	13.1	14000	21	13300	75000	
A 90 3_116.9	116.9	24.0	14000	39	10100	63000	12.0	14000	19.3	13200	75000	
A 90 3_126.6	126.6	22.1	10650	27	10600	71400	11.1	13150	16.7	13400	75000	315
A 90 3_139.4	139.4	20.1	10350	24	10600	74500	10.0	12750	14.7	13400	75000	
A 90 3_151.0	151.0	18.5	11200	24	10600	75000	9.3	13800	14.7	13400	75000	
A 90 4_166.1	166.1	16.9	14000	28	—	75000	8.4	14000	13.9	—	75000	
A 90 4_180.0	180.0	15.6	14000	26	—	75000	7.8	14000	12.8	—	75000	
A 90 4_209.0	209.0	13.4	14000	22	—	75000	6.7	14000	11.0	—	75000	
A 90 4_226.4	226.4	12.4	14000	20	—	75000	6.2	14000	10.2	—	75000	
A 90 4_281.4	281.4	9.9	14000	16.4	—	75000	5.0	14000	8.2	—	75000	
A 90 4_304.9	304.9	9.2	14000	15.1	—	75000	4.6	14000	7.6	—	75000	
A 90 4_355.8	355.8	7.9	14000	13.0	—	75000	3.9	14000	6.5	—	75000	
A 90 4_385.4	385.4	7.3	14000	12.0	—	75000	3.6	14000	6.0	680	75000	
A 90 4_449.2	449.2	6.2	14000	10.3	—	75000	3.1	14000	5.1	—	75000	
A 90 4_486.6	486.6	5.8	14000	9.5	—	75000	2.9	14000	4.7	950	75000	
A 90 4_555.3	555.3	5.0	14000	8.3	—	75000	2.5	14000	4.2	740	75000	
A 90 4_601.6	601.6	4.7	14000	7.7	—	75000	2.3	14000	3.8	1200	75000	
A 90 4_707.9	707.9	4.0	14000	6.5	—	75000	2.0	14000	3.3	1050	75000	
A 90 4_766.9	766.9	3.7	14000	6.0	—	75000	1.8	14000	3.0	1490	75000	
A 90 4_865.1	865.1	3.2	14000	5.3	—	75000	1.6	14000	2.7	1170	75000	
A 90 4_937.2	937.2	3.0	14000	4.9	—	75000	1.5	14000	2.5	1590	75000	
A 90 4_1025	1025	2.7	14000	4.5	—	75000	1.4	14000	2.2	1330	75000	
A 90 4_1111	1111	2.5	14000	4.2	—	75000	1.3	14000	2.1	1740	75000	
A 90 4_1222	1222	2.3	14000	3.8	—	75000	1.1	14000	1.9	1380	75000	
A 90 4_1324	1324	2.1	14000	3.5	—	75000	1.1	14000	1.7	1790	75000	
A 90 4_1507	1507	1.9	14000	3.1	—	75000	0.93	14000	1.5	1440	75000	
A 90 4_1632	1632	1.7	14000	2.8	—	75000	0.86	14000	1.4	1840	75000	

(—) Contact our technical service department advising radial load data (rotation direction, orientation, position)

Bonfiglioli Riduttori

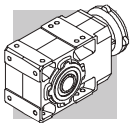

A 90 — 14000 Nm

	i	n_1 = 900 min^{-1}					n_1 = 500 min^{-1}					
		n_2 min^{-1}	M_{n2} Nm	P_{n1} kW	R_{n1} N	R_{n2} N	n_2 min^{-1}	M_{n2} Nm	P_{n1} kW	R_{n1} N	R_{n2} N	
A 90 3_9.7	9.7	93	9050	97	9800	42300	52	9050	54	15000	53700	
A 90 3_10.5	10.5	86	9800	97	9810	42500	48	9800	54	15000	54200	
A 90 3_12.6	12.6	71	11800	97	6720	42100	40	11800	54	13500	54500	
A 90 3_13.7	13.7	66	12750	96	6770	42100	37	12800	54	13500	54600	
A 90 3_15.6	15.6	58	11550	77	8730	46700	32	11550	43	15000	59900	
A 90 3_16.9	16.9	53	12500	77	8750	46800	29.6	12500	43	15000	60300	
A 90 3_19.4	19.4	46	11550	62	9630	51400	25.8	11550	34	15000	65400	
A 90 3_21.0	21.0	43	12400	61	9790	51700	23.8	12400	34	15000	66100	
A 90 3_22.3	22.3	40	13850	64	14200	50200	22.5	14000	36	15000	64700	
A 90 3_24.1	24.1	37	14000	60	14400	51900	20.7	14000	33	15000	66900	
A 90 3_29.1	29.1	31	14000	50	14600	56200	17.2	14000	28	15000	72100	
A 90 3_31.5	31.5	28.6	14000	46	14800	58400	15.9	14000	26	15000	74700	
A 90 3_35.8	35.8	25.1	14000	40	14900	61700	14.0	14000	23	15000	75000	
A 90 3_38.8	38.8	23.2	14000	37	15000	63900	12.9	14000	21	15000	75000	
A 90 3_44.6	44.6	20.2	14000	33	15000	67700	11.2	14000	18.1	15000	75000	
A 90 3_48.3	48.3	18.6	14000	30	15000	70000	10.4	14000	16.7	15000	75000	
A 90 3_55.0	55.0	16.4	14000	26	15000	73800	9.1	14000	14.6	15000	75000	
A 90 3_59.6	59.6	15.1	14000	24	15000	75000	8.4	14000	13.5	15000	75000	
A 90 3_68.8	68.8	13.1	14000	21	15000	75000	7.3	14000	11.7	15000	75000	
A 90 3_74.5	74.5	12.1	14000	19.5	15000	75000	6.7	14000	10.8	15000	75000	
A 90 3_80.4	80.4	11.2	14000	18.0	15000	75000	6.2	14000	10.0	15000	75000	
A 90 3_87.1	87.1	10.3	14000	16.7	15000	75000	5.7	14000	9.3	15000	75000	
A 90 3_98.6	98.6	9.1	14000	14.7	15000	75000	5.1	14000	8.2	15000	75000	
A 90 3_106.8	106.8	8.4	14000	13.6	15000	75000	4.7	14000	7.5	15000	75000	
A 90 3_116.9	116.9	7.7	14000	12.4	15000	75000	4.3	14000	6.9	15000	75000	
A 90 3_126.6	126.6	7.1	14000	11.4	15000	75000	3.9	14000	6.4	15000	75000	315
A 90 3_139.4	139.4	6.5	14000	10.4	15000	75000	3.6	14000	5.8	15000	75000	
A 90 3_151.0	151.0	6.0	14000	9.6	15000	75000	3.3	14000	5.3	15000	75000	
A 90 4_166.1	166.1	5.4	14000	8.9	—	75000	3.0	14000	5.0	700	75000	
A 90 4_180.0	180.0	5.0	14000	8.2	—	75000	2.8	14000	4.6	1400	75000	
A 90 4_209.0	209.0	4.3	14000	7.1	—	75000	2.4	14000	3.9	1500	75000	
A 90 4_226.4	226.4	4.0	14000	6.5	500	75000	2.2	14000	3.6	2100	75000	
A 90 4_281.4	281.4	3.2	14000	5.3	690	75000	1.8	14000	2.9	2300	75000	
A 90 4_304.9	304.9	3.0	14000	4.9	1230	75000	1.6	14000	2.7	2900	75000	
A 90 4_355.8	355.8	2.5	14000	4.2	1240	75000	1.4	14000	2.3	2900	75000	
A 90 4_385.4	385.4	2.3	14000	3.8	1750	75000	1.3	14000	2.1	3400	75000	
A 90 4_449.2	449.2	2.0	14000	3.3	1540	75000	1.1	14000	1.8	3200	75000	
A 90 4_486.6	486.6	1.8	14000	3.0	2020	75000	1.0	14000	1.7	3500	75000	
A 90 4_555.3	555.3	1.6	14000	2.7	1810	75000	0.90	14000	1.5	3500	75000	
A 90 4_601.6	601.6	1.5	14000	2.5	2270	75000	0.83	14000	1.4	3500	75000	
A 90 4_707.9	707.9	1.3	14000	2.1	2120	75000	0.71	14000	1.2	3500	75000	
A 90 4_766.9	766.9	1.2	14000	1.9	2560	75000	0.65	14000	1.1	3500	75000	
A 90 4_865.1	865.1	1.0	14000	1.7	2240	75000	0.58	14000	0.95	3500	75000	
A 90 4_937.2	937.2	0.96	14000	1.6	2660	75000	0.53	14000	0.88	3500	75000	
A 90 4_1025	1025	0.88	14000	1.4	2400	75000	0.49	14000	0.80	3500	75000	
A 90 4_1111	1111	0.81	14000	1.3	2810	75000	0.45	14000	0.74	3500	75000	
A 90 4_1222	1222	0.74	14000	1.2	2450	75000	0.41	14000	0.67	3500	75000	
A 90 4_1324	1324	0.68	14000	1.1	2860	75000	0.38	14000	0.62	3500	75000	
A 90 4_1507	1507	0.60	14000	0.98	2410	75000	0.33	14000	0.55	3500	75000	
A 90 4_1632	1632	0.55	14000	0.91	2910	75000	0.31	14000	0.50	3500	75000	

(—) Contact our technical service department advising radial load data (rotation direction, orientation, position)

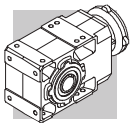

40 MOTOR AVAILABILITY

Please be aware that motor-gearbox combinations resulting from the following charts are purely based on geometrical compatibility.

When selecting a gearmotor, refer to procedure specified at paragraph 12 and observe particularly the condition $S \geq f_S$.

(C 40)

		IEC_ BN (IM B5)											
		BN										IEC	
P_{n1}(#) [kW]	2p	0.37	0.75	1.5	2.2	4	4	9.2	18.5	22	30	45	55
	4p	0.25	0.55	1.1	1.85	3	4	9.2	15	22	30	47	55
	6p	0.12	0.37	0.75	1.1	1.85	2.2	5.5	11	15	18.5	30	37
		P63	P71	P80	P90	P100	P112	P132	P160	P180	P200	P225	P250
A 05 2		5.5_91.6	5.5_51.3	5.5_51.3									
A 10 2		5.5_91.6	5.5_91.6	5.5_65.9	5.5_65.9	5.5_65.9	5.5_65.9						
A 20 2		7.3_92.3 ⛔ (10.3)	7.3_92.3 ⛔ (10.3)	5.4_79.9	5.4_79.9	5.4_79.9	5.4_79.9						
A 20 3		109.2_380.9	109.2_380.9	109.2_380.9	109.2_380.9	109.2_380.9	109.2_380.9						
A 30 2		9.3_97.5 ⛔ (10.5 ; 13.6_16.3)	9.3_97.5 ⛔ (10.5 ; 13.6_16.3)	5.4_97.5	5.4_97.5	5.4_97.5	5.4_97.5						
A 30 3		109.1_400.8	109.1_400.8	109.1_400.8	109.1_400.8	109.1_400.8	109.1_400.8						
A 35 2		9.3_95.6 ⛔ (13.1_20.4)	9.3_95.6 ⛔ (13.1_20.4)	5.4_95.6	5.4_95.6	5.4_95.6	5.4_95.6	5.4_11.8					
A 35 3		105.5_393.2	105.5_393.2	105.5_393.2	105.5_393.2	105.5_393.2	105.5_393.2						
A 41 2		11.7_79.2 ⛔ (13.8_17.8)	11.7_79.2 ⛔ (13.8_17.8)	5.2_79.2	5.2_79.2	5.2_79.2	5.2_79.2	5.2_45.1					
A 41 3		92.8_376.8	92.8_376.8	92.8_376.8	92.8_376.8	92.8_376.8	92.8_376.8						
A 50 2		20.9	20.9	7.7_20.9	7.7_20.9	7.7_20.9	7.7_20.9	7.7_20.9	7.7_20.9	7.7_20.9			
A 50 3		51.7_190.6	51.7_190.6	24.0_190.6	24.0_190.6	24.0_190.6	24.0_190.6	24.0_109.4	24.0_109.4	24.0_109.4			
A 50 4	i =	211.0_778.2	211.0_778.2	211.0_778.2	211.0_778.2	211.0_778.2	211.0_778.2						
A 55 2				13.1_19.2	13.1_19.2	13.1_19.2	13.1_19.2	4.9_19.2	4.9_19.2	4.9_19.2			
A 55 3		64.3_194.2	64.3_194.2	23.8_194.2	23.8_194.2	23.8_194.2	23.8_194.2	23.8_123.9	23.8_123.9	23.8_123.9			
A 55 4		208.1_793.0	208.1_793.0	208.1_793.0	208.1_793.0	208.1_793.0	208.1_793.0						
A 60 2				10.3_20.6	10.3_20.6	10.3_20.6	10.3_20.6	7.9_20.6	7.9_20.6	7.9_20.6			
A 60 3		65.0_185.8	65.0_185.8	25.7_185.8	25.7_185.8	25.7_185.8	25.7_185.8	25.7_133.3	25.7_133.3	25.7_133.3			
A 60 4		208.7_755.4	208.7_755.4	208.7_755.4	208.7_755.4	208.7_755.4	208.7_755.4						
A 70 3				66.9_153.7	66.9_153.7	66.9_153.7	66.9_153.7	15.4_153.7 ⛔ (23.5_30.1)	9.4_153.7	9.4_153.7	9.4_38.4 ⛔ (19.7_21.3)		
A 70 4		292.0_1715	292.0_1715	169.8_1715	169.8_1715	169.8_1715	169.8_1715	169.8_644.6					
A 80 3				82.3_156.8	82.3_156.8	82.3_156.8	82.3_156.8	19.3_156.8 ⛔ (22.6_38.5)	12.3_156.8 ⛔ (22.6_24.5)	9.8_156.8	9.8_104.0	9.8_104.0	
A 80 4		354.0_1558	354.0_1558	171.3_1558	171.3_1558	171.3_1558	171.3_1558	171.3_762.1					
A 90 3				98.6_151.0	98.6_151.0	98.6_151.0	98.6_151.0	55.0_151.0	19.4_151.0 ⛔ (22.3_38.8)	9.7_151.0	9.7_126.6	9.7_126.6	9.7_126.6
A 90 4		449.2_1632	449.2_1632	166.1_1632	166.1_1632	166.1_1632	166.1_1632	166.1_937.2	166.1_937.2	166.1_937.2			

(#) **P_{n1}** = maximum installable power on input P_

Bonfiglioli Riduttori

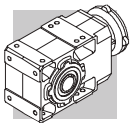

(C 41)

		M05	M1	M2	M3	M4	M5
A 05 2		5.5_91.6	5.5_51.3	5.5_65.9			
A 10 2		5.5_91.6	5.5_51.3	5.5_65.9	5.5_65.9		
A 20 2		7.3_92.3 ⛔ (10.3)	7.3_63.1 ⛔ (10.3)	5.4_79.9	5.4_79.9		
A 20 3		109.2_380.9	109.2_380.9	109.2_380.9	109.2_380.9		
A 30 2			9.3_76.5 ⛔ (10.5 ; 13.6_16.3)	5.4_97.5	5.4_97.5		
A 30 3		109.1_400.8	109.1_400.8	109.1_400.8	109.1_400.8		
A 35 2			9.3_95.6 ⛔ (13.1_20.4)	5.4_95.6	5.4_95.6	5.4_11.8	
A 35 3		105.5_393.2	105.5_393.2	105.5_393.2	105.5_393.2		
A 41 2			11.7_79.2 ⛔ (13.8_17.8)	5.2_79.2	5.2_79.2	5.2_45.1	
A 41 3		92.8_376.8	92.8_376.8	92.8_376.8	92.8_376.8		
A 50 2			20.9	7.7_20.9	7.7_20.9	7.7_20.9	7.7_20.9
A 50 3			51.7_190.6	24.0_190.6	24.0_190.6	24.0_109.4	24.0_109.4
A 50 4	**i =**		211.0_778.2	211.0_778.2	211.0_778.2		
A 55 2				13.1_19.2	13.1_19.2	4.9_19.2	4.9_19.2
A 55 3			64.3_194.2	23.8_194.2	23.8_194.2	23.8_123.9	23.8_123.9
A 55 4			208.1_793.0	208.1_793.0	208.1_793.0		
A 60 2				10.3_20.6	10.3_20.6	7.9_20.6	7.9_20.6
A 60 3				25.7_185.8	25.7_185.8	25.7_133.3	25.7_133.3
A 60 4			208.7_755.4	208.7_755.4	208.7_755.4		
A 70 3				66.9_153.7	66.9_153.7	15.4_153.7 ⛔ (23.5_30.1)	15.4_153.7 ⛔ (23.5_30.1)
A 70 4			292.0_1715	169.8_1715	169.8_1715	169.8_644.6	
A 80 3					82.3_156.8	19.3_156.8 ⛔ (22.6_38.5)	19.3_156.8 ⛔ (22.6_38.5)
A 80 4			354.0_1558	171.3_1558	171.3_1558	171.3_762.1	
A 90 3					98.6_151.0	55.0_151.0	55.0_151.0
A 90 4			449.2_1632	166.1_1632	166.1_1632	166.1_937.2	

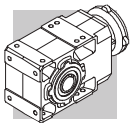

Motor adapters matching the most popular brands of servomotors are available for units size A05… A60. Dimensions of servomotor inputs are provided within the drawing section for each frame size. The code **SK** applies for inputs featuring a conventional keyway, while through the specification of the **SC** code the input shaft will feature a clamping device instead.

(C 42)

		SERVO INPUT					
		SK40A	SK60A	SK60B	SK80A	SK80B	SK80C
		SC40A	SC60A	SC60B	SC80A	SC80B	SC80C
A 05 2	i =	5.5_91.6	5.5_91.6	5.5_51.3	5.5_51.3		
A 10 2			5.5_91.6	5.5_51.3	5.5_51.3		5.5_65.9
A 20 2			7.3_92.3 ⛔ (10.3)	7.3_63.1 ⛔ (10.3)	7.3_63.1 ⛔ (10.3)		5.4_79.9
A 20 3			109.2_380.9	109.2_380.9	109.2_380.9		109.2_380.9
A 30 2			9.3_97.5 ⛔ (10.5 ; 13.6_16.3)	9.3_76.5 ⛔ (10.5 ; 13.6_16.3)	9.3_76.5 ⛔ (10.5 ; 13.6_16.3)		5.4_97.5
A 30 3			109.1_400.8	109.1_400.8	109.1_400.8		109.1_400.8
A 35 2			9.3_95.6 ⛔ (13.1_20.4)	9.3_95.6 ⛔ (13.1_20.4)	9.3_95.6 ⛔ (13.1_20.4)		5.4_95.6
A 35 3			105.5_393.2	105.5_393.2	105.5_393.2		105.5_393.2
A 41 2						11.7_79.2 ⛔ (13.8_17.8)	5.2_79.2
A 41 3			92.8_376.8	92.8_376.8	92.8_376.8		92.8_376.8
A 50 2						20.9	7.7_20.9
A 50 3						51.7_190.6	24.0_190.6
A 50 4							211.0_778.2
A 55 2							13.1_19.2
A 55 3						64.3_194.2	23.8_194.2
A 55 4							208.1_793.0
A 60 2							10.3_20.6
A 60 3							25.7_185.8
A 60 4						208.7_755.4	208.7_755.4

(C 43)

		SERVO INPUT								
		SK95A	SK95B	SK95C	SK110A	SK110B	SK130A	SK130B	SK180A	SK180B
		SC95A	SC95B	SC95C	SC110A	SC110B	SC130A	SC130B	SC180A	SC180B
A 10 2	i =	5.5_51.3	5.5_65.9	5.5_65.9	5.5_65.9	5.5_65.9				
A 20 2		7.3_63.1 ⛔ (10.3)	5.4_79.9	5.4_79.9	5.4_79.9	5.4_79.9				
A 20 3		109.2_380.9	109.2_380.9	109.2_380.9	109.2_380.9	109.2_380.9				
A 30 2		9.3_76.5 ⛔ (10.5 ; 13.6_16.3)	5.4_97.5	5.4_97.5	5.4_97.5	5.4_97.5	5.4_97.5			
A 30 3		109.1_400.8	109.1_400.8	109.1_400.8	109.1_400.8	109.1_400.8				
A 35 2		9.3_95.6 ⛔ (13.1_20.4)	5.4_95.6	5.4_95.6	5.4_95.6	5.4_95.6	5.4_95.6			
A 35 3		105.5_393.2	105.5_393.2	105.5_393.2	105.5_393.2	105.5_393.2				
A 41 2		11.7_79.2 ⛔ (13.8_17.8)	5.2_79.2	5.2_79.2	5.2_79.2	5.2_79.2	5.2_79.2	5.2_45.1	5.2_45.1	5.2_45.1
A 41 3		92.8_376.8	92.8_376.8	92.8_376.8	92.8_376.8	92.8_376.8				
A 50 2		20.9	7.7_20.9	7.7_20.9	7.7_20.9	7.7_20.9	7.7_20.9	7.7_20.9	7.7_20.9	7.7_20.9
A 50 3		51.7_190.6	24.0_190.6	24.0_190.6	24.0_190.6	24.0_190.6	24.0_190.6	24.0_109.4	24.0_109.4	24.0_109.4
A 50 4		211.0_778.2	211.0_778.2	211.0_778.2	211.0_778.2	211.0_778.2	211.0_778.2			
A 55 2			13.1_19.2	13.1_19.2	13.1_19.2	13.1_19.2	13.1_19.2	4.9_19.2	4.9_19.2	4.9_19.2
A 55 3		64.3_194.2	23.8_194.2	23.8_194.2	23.8_194.2	23.8_194.2	23.8_194.2	23.8_123.9	23.8_123.9	23.8_123.9
A 55 4		208.1_793.0	208.1_793.0	208.1_793.0	208.1_793.0	208.1_793.0	208.1_793.0			
A 60 2			10.3_20.6	10.3_20.6	10.3_20.6	10.3_20.6	10.3_20.6	7.9_20.6	7.9_20.6	7.9_20.6
A 60 3		65.0_185.8	25.7_185.8	25.7_185.8	25.7_185.8	25.7_185.8	25.7_185.8	25.7_133.3	25.7_133.3	25.7_133.3
A 60 4		208.7_755.4	208.7_755.4	208.7_755.4	208.7_755.4	208.7_755.4	208.7_755.4			

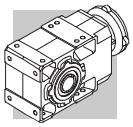

41 MOMENT OF INERTIA

The following charts indicate moment of inertia values J_r [kgm^2] referred to the gear unit high speed shaft. A key to the symbols used follows:

Values under this icon refer to compact gear units, without motor. To obtain the overall moment of inertia for the gearmotor just add the value of the inertia for the specific compact motor, given in the relevant rating chart.

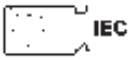

Values under this symbol refer to gearboxes with IEC motor adaptor (IEC size...).

This symbol refers to gearbox values.

Values under this symbol refer to gear unit with servomotor input adapter.

A 05

	i	J (•10^{-4}) [kgm^2]				
			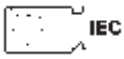 IEC 63	71	80	
A 05 2_5.5	5.5	0.72	0.99	1.0	1.4	—
A 05 2_6.3	6.3	0.56	0.83	0.86	1.2	—
A 05 2_7.2	7.2	0.48	0.74	0.77	1.1	—
A 05 2_8.5	8.5	0.36	0.63	0.65	1.0	—
A 05 2_9.6	9.6	0.29	0.55	0.58	0.92	—
A 05 2_10.6	10.6	0.50	0.77	0.80	1.1	—
A 05 2_12.3	12.3	0.18	0.45	0.48	0.82	—
A 05 2_13.9	13.9	0.35	0.62	0.65	0.99	—
A 05 2_16.4	16.4	0.27	0.54	0.57	0.91	—
A 05 2_18.6	18.6	0.22	0.49	0.51	0.86	—
A 05 2_21.4	21.4	0.16	0.43	0.46	0.80	—
A 05 2_23.8	23.8	0.14	0.41	0.43	0.78	—
A 05 2_25.5	25.5	0.13	0.39	0.42	0.76	—
A 05 2_28.6	28.6	0.11	0.38	0.40	0.75	—
A 05 2_32.2	32.2	0.09	0.36	0.39	0.73	—
A 05 2_35.1	35.1	0.08	0.35	0.37	0.72	—
A 05 2_40.9	40.9	0.07	0.33	0.36	0.70	—
A 05 2_45.4	45.4	0.05	0.32	0.35	0.69	—
A 05 2_51.3	51.3	0.04	0.31	0.34	0.68	—
A 05 2_58.6	58.6	0.04	0.31	—	—	—
A 05 2_65.9	65.9	0.03	0.30	—	—	—
A 05 2_76.4	76.4	0.02	0.29	—	—	—
A 05 2_91.6	91.6	0.02	0.28	—	—	—

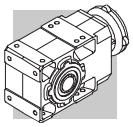

A 05

	i	J (•10-4) [kgm2]					
		SERVO					
		40A		60A		60B 80A	
		SK	SC	SK	SC	SK	SC
A 05 2_5.5	5.5	0.89	1.1	0.99	1.3	1.0	1.4
A 05 2_6.3	6.3	0.73	0.89	0.83	1.1	0.86	1.3
A 05 2_7.2	7.2	0.65	0.81	0.74	1.0	0.77	1.2
A 05 2_8.5	8.5	0.53	0.69	0.63	0.89	0.65	1.1
A 05 2_9.6	9.6	0.46	0.62	0.55	0.81	0.58	1.0
A 05 2_10.6	10.6	0.67	0.83	0.77	1.0	0.80	1.2
A 05 2_12.3	12.3	0.35	0.51	0.45	0.71	0.48	0.92
A 05 2_13.9	13.9	0.52	0.68	0.62	0.88	0.65	1.1
A 05 2_16.4	16.4	0.44	0.60	0.54	0.80	0.57	1.0
A 05 2_18.6	18.6	0.39	0.55	0.49	0.75	0.51	0.95
A 05 2_21.4	21.4	0.33	0.49	0.43	0.69	0.46	0.90
A 05 2_23.8	23.8	0.31	0.47	0.41	0.67	0.43	0.87
A 05 2_25.5	25.5	0.30	0.46	0.39	0.65	0.42	0.86
A 05 2_28.6	28.6	0.28	0.44	0.38	0.64	0.40	0.84
A 05 2_32.2	32.2	0.26	0.42	0.36	0.62	0.39	0.83
A 05 2_35.1	35.1	0.25	0.41	0.35	0.61	0.37	0.81
A 05 2_40.9	40.9	0.24	0.40	0.33	0.59	0.36	0.80
A 05 2_45.4	45.4	0.22	0.38	0.32	0.58	0.35	0.79
A 05 2_51.3	51.3	0.21	0.37	0.31	0.57	0.34	0.78
A 05 2_58.6	58.6	0.21	0.37	0.31	0.57	—	—
A 05 2_65.9	65.9	0.20	0.36	0.30	0.56	—	—
A 05 2_76.4	76.4	0.19	0.35	0.29	0.55	—	—
A 05 2_91.6	91.6	0.19	0.35	0.28	0.54	—	—

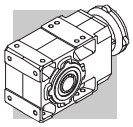

A 10

	i	J (•10-4) [kgm2]							
			IEC						
			63	71	80	90	100	112	
A 10 2_5.5	5.5	1.0	2.5	2.5	3.9	3.8	5.1	5.1	1.8
A 10 2_6.3	6.3	0.80	2.3	2.3	3.7	3.6	4.9	4.9	1.6
A 10 2_7.2	7.2	0.60	2.1	2.1	3.5	3.4	4.7	4.7	1.5
A 10 2_8.5	8.5	0.45	1.9	1.9	3.3	3.1	4.5	4.5	1.4
A 10 2_9.6	9.6	0.30	1.8	1.8	3.2	3.1	4.4	4.4	1.3
A 10 2_10.6	10.6	0.50	2.0	2.0	3.4	3.3	4.6	4.6	1.4
A 10 2_12.3	12.3	0.20	1.7	1.7	3.1	3.0	4.3	4.3	1.1
A 10 2_13.9	13.9	0.30	1.8	1.8	3.2	3.1	4.6	4.6	1.2
A 10 2_16.4	16.4	0.25	1.7	1.7	3.1	3.0	4.3	4.3	1.1
A 10 2_18.6	18.6	0.20	1.7	1.7	3.1	3.0	4.3	4.3	1.0
A 10 2_21.4	21.4	0.15	1.6	1.6	3.0	2.9	4.2	4.2	1.0
A 10 2_23.8	23.8	0.10	1.6	1.6	3.0	2.9	4.2	4.2	1.0
A 10 2_25.5	25.5	0.10	1.6	1.6	3.0	2.9	4.2	4.2	1.0
A 10 2_28.6	28.6	0.10	1.6	1.6	3.0	2.9	4.2	4.2	0.90
A 10 2_32.2	32.2	0.08	1.6	1.6	3.0	2.9	4.2	4.2	0.90
A 10 2_35.1	35.1	0.07	1.6	1.6	3.0	2.9	4.2	4.2	0.90
A 10 2_40.9	40.9	0.06	1.6	1.6	3.0	2.9	4.2	4.2	0.90
A 10 2_45.4	45.4	0.05	1.6	1.6	3.0	2.9	4.2	4.2	0.90
A 10 2_51.3	51.3	0.03	1.5	1.5	2.9	2.8	4.1	4.1	0.90
A 10 2_58.6	58.6	0.03	1.5	1.5	2.9	2.8	4.1	4.1	0.90
A 10 2_65.9	65.9	0.02	1.5	1.5	2.9	2.8	4.1	4.1	0.90
A 10 2_76.4	76.4	0.02	1.5	1.5	—	—	—	—	0.90
A 10 2_91.6	91.6	0.01	1.5	1.5	—	—	—	—	0.90

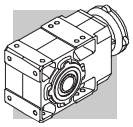

A 10

	i	J (•10-4) [kgm2]									
		SERVO									
		60A		60B 80A		95A		80C 95B 110A		95C 110B	
		SK	SC	SK	SC	SK	SC	SK	SC	SK	SC
A 10 2_5.5	5.5	1.3	1.5	1.3	1.7	3.8	4.3	3.9	4.4	3.8	4.8
A 10 2_6.3	6.3	1.1	1.3	1.1	1.5	3.6	4.1	3.7	4.2	3.6	4.6
A 10 2_7.2	7.2	0.87	1.1	0.89	1.3	3.4	3.9	3.5	4.0	3.4	4.4
A 10 2_8.5	8.5	0.72	0.98	0.74	1.2	3.3	3.7	3.3	3.8	3.1	4.1
A 10 2_9.6	9.6	0.57	0.83	0.59	1.0	3.1	3.6	3.2	3.7	3.1	4.1
A 10 2_10.6	10.6	0.77	1.0	0.79	1.2	3.3	3.8	3.4	3.9	3.3	4.3
A 10 2_12.3	12.3	0.47	0.73	0.49	0.93	3.0	3.5	3.1	3.6	3.0	4.0
A 10 2_13.9	13.9	0.57	0.83	0.59	1.0	3.1	3.6	3.2	3.7	3.1	4.1
A 10 2_16.4	16.4	0.52	0.78	0.54	0.98	3.1	3.5	3.1	3.6	3.0	4.0
A 10 2_18.6	18.6	0.47	0.73	0.49	0.93	3.0	3.5	3.1	3.6	3.0	4.0
A 10 2_21.4	21.4	0.42	0.68	0.44	0.88	3.0	3.4	3.0	3.5	2.9	3.9
A 10 2_23.8	23.8	0.37	0.63	0.39	0.83	2.9	3.4	3.0	3.5	2.9	3.9
A 10 2_25.5	25.5	0.37	0.63	0.39	0.83	2.9	3.4	3.0	3.5	2.9	3.9
A 10 2_28.6	28.6	0.37	0.63	0.39	0.83	2.9	3.4	3.0	3.5	2.9	3.9
A 10 2_32.2	32.2	0.35	0.61	0.37	0.81	2.9	3.3	3.0	3.5	2.9	3.9
A 10 2_35.1	35.1	0.34	0.60	0.36	0.80	2.9	3.3	3.0	3.5	2.9	3.9
A 10 2_40.9	40.9	0.33	0.59	0.35	0.79	2.9	3.3	3.0	3.5	2.9	3.9
A 10 2_45.4	45.4	0.32	0.58	0.34	0.78	2.9	3.3	3.0	3.5	2.9	3.9
A 10 2_51.3	51.3	0.30	0.56	0.32	0.76	2.9	3.3	2.9	3.4	2.8	3.8
A 10 2_58.6	58.6	0.30	0.56	—	—	—	—	2.9	3.4	2.8	3.8
A 10 2_65.9	65.9	0.29	0.55	—	—	—	—	2.9	3.4	2.8	3.8
A 10 2_76.4	76.4	0.29	0.55	—	—	—	—	—	—	—	—
A 10 2_91.6	91.6	0.28	0.54	—	—	—	—	—	—	—	—

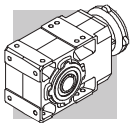

A 20

	i	J (•10-4) [kgm2]							
			IEC						
			63	71	80	90	100	112	
A 20 2_5.4	5.4	2.4	—	—	5.3	5.2	6.5	6.5	4.3
A 20 2_6.5	6.5	1.9	—	—	4.8	4.7	6.0	6.0	3.8
A 20 2_7.3	7.3	1.4	2.9	2.9	4.3	4.2	5.5	5.5	3.3
A 20 2_8.4	8.4	1.1	2.6	2.6	4.0	3.9	5.2	5.2	3.0
A 20 2_9.4	9.4	0.90	2.4	2.4	3.8	3.7	5.0	5.0	2.8
A 20 2_10.3	10.3	1.2	—	—	4.1	4.0	5.3	5.3	3.0
A 20 2_12.0	12.0	0.50	2.0	2.0	3.4	3.3	4.6	4.6	2.4
A 20 2_14.1	14.1	0.70	2.2	2.2	3.6	3.5	4.8	4.8	2.6
A 20 2_16.2	16.2	0.55	2.0	2.0	3.4	3.3	4.6	4.6	2.5
A 20 2_18.1	18.1	0.40	1.9	1.9	3.3	3.2	4.5	4.5	2.4
A 20 2_21.2	21.2	0.35	1.8	1.8	3.2	3.1	4.4	4.4	2.3
A 20 2_23.1	23.1	0.30	1.8	1.8	3.2	3.1	4.4	4.4	2.2
A 20 2_26.5	26.5	0.25	1.7	1.7	3.1	3.0	4.3	4.3	2.1
A 20 2_29.2	29.2	0.20	1.7	1.7	3.1	3.0	4.3	4.3	2.1
A 20 2_31.3	31.3	0.20	1.7	1.7	3.1	3.0	4.3	4.3	2.1
A 20 2_35.4	35.4	0.20	1.7	1.7	3.1	3.0	4.3	4.3	2.1
A 20 2_39.6	39.6	0.10	1.6	1.6	3.0	2.9	4.2	4.2	2.0
A 20 2_43.2	43.2	0.10	1.6	1.6	3.0	2.9	4.2	4.2	2.0
A 20 2_48.3	48.3	0.10	1.6	1.6	3.0	2.9	4.2	4.2	2.0
A 20 2_53.7	53.7	0.10	1.6	1.6	3.0	2.9	4.2	4.2	2.0
A 20 2_63.1	63.1	0.10	1.6	1.6	3.0	2.9	4.2	4.2	2.0
A 20 2_71.0	71.0	0.05	1.5	1.5	2.9	2.8	4.1	4.1	2.0
A 20 2_79.9	79.9	0.03	1.5	1.5	2.9	2.8	4.1	4.1	2.0
A 20 2_92.3	92.3	0.02	1.5	1.5	—	—	—	—	2.0
A 20 3_109.2	109.2	0.02	1.5	1.5	2.9	2.8	4.1	4.1	0.90
A 20 3_120.5	120.5	0.02	1.5	1.5	2.9	2.8	4.1	4.1	0.90
A 20 3_129.1	129.1	0.02	1.5	1.5	2.9	2.8	4.1	4.1	0.90
A 20 3_146.1	146.1	0.02	1.5	1.5	2.9	2.8	4.1	4.1	0.90
A 20 3_163.4	163.4	0.01	1.5	1.5	2.9	2.8	4.1	4.1	0.90
A 20 3_178.3	178.3	0.01	1.5	1.5	2.9	2.8	4.1	4.1	0.90
A 20 3_199.2	199.2	0.01	1.5	1.5	2.9	2.8	4.1	4.1	0.90
A 20 3_221.3	221.3	0.01	1.5	1.5	2.9	2.8	4.1	4.1	0.90
A 20 3_260.5	260.5	0.01	1.5	1.5	2.9	2.8	4.1	4.1	0.90
A 20 3_292.8	292.8	0.01	1.5	1.5	2.9	2.8	4.1	4.1	0.90
A 20 3_329.4	329.4	0.01	1.5	1.5	2.9	2.8	4.1	4.1	0.90
A 20 3_380.9	380.9	0.01	1.5	1.5	2.9	2.8	4.1	4.1	0.90

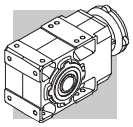

A 20

	i	J (•10-4) [kgm2]									
		SERVO									
		60A		60B 80A		95A		80C 95B 110A		95C 110B	
		SK	SC	SK	SC	SK	SC	SK	SC	SK	SC
A 20 2_5.4	5.4	—	—	—	—	—	—	5.3	5.8	5.2	6.2
A 20 2_6.5	6.5	—	—	—	—	—	—	4.8	5.3	4.7	5.7
A 20 2_7.3	7.3	1.7	1.9	1.7	2.1	4.2	4.7	4.3	4.8	4.2	5.2
A 20 2_8.4	8.4	1.4	1.6	1.4	1.8	3.9	4.6	4.0	4.5	3.9	4.9
A 20 2_9.4	9.4	1.2	1.4	1.2	1.6	3.7	4.2	3.8	4.3	3.7	4.7
A 20 2_10.3	10.3	—	—	—	—	—	—	4.1	4.6	4.0	5.0
A 20 2_12.0	12.0	0.77	1.0	0.79	1.2	3.3	3.8	3.4	3.9	3.3	4.3
A 20 2_14.1	14.1	0.97	1.2	0.99	1.4	3.5	4.0	3.6	4.1	3.5	4.5
A 20 2_16.2	16.2	0.82	1.1	0.84	1.3	3.4	3.8	3.4	3.9	3.3	4.3
A 20 2_18.1	18.1	0.67	0.93	0.69	1.1	3.2	3.7	3.3	3.8	3.2	4.2
A 20 2_21.2	21.2	0.62	0.88	0.64	1.1	3.2	3.6	3.2	3.7	3.1	4.1
A 20 2_23.1	23.1	0.57	0.83	0.59	1.0	3.1	3.6	3.2	3.7	3.1	4.1
A 20 2_26.5	26.5	0.52	0.78	0.54	0.98	3.1	3.5	3.1	3.6	3.0	4.0
A 20 2_29.2	29.2	0.47	0.73	0.49	0.93	3.0	3.5	3.1	3.6	3.0	4.0
A 20 2_31.3	31.3	0.47	0.73	0.49	0.93	3.0	3.5	3.1	3.6	3.0	4.0
A 20 2_35.4	35.4	0.47	0.73	0.49	0.93	3.0	3.5	3.1	3.6	3.0	4.0
A 20 2_39.6	39.6	0.37	0.63	0.39	0.83	2.9	3.4	3.0	3.5	2.9	3.9
A 20 2_43.2	43.2	0.37	0.63	0.39	0.83	2.9	3.4	3.0	3.5	2.9	3.9
A 20 2_48.3	48.3	0.37	0.63	0.39	0.83	2.9	3.4	3.0	3.5	2.9	3.9
A 20 2_53.7	53.7	0.37	0.63	0.39	0.83	2.9	3.4	3.0	3.5	2.9	3.9
A 20 2_63.1	63.1	0.37	0.63	0.39	0.83	2.9	3.4	3.0	3.5	2.9	3.9
A 20 2_71.0	71.0	0.32	0.58	—	—	—	—	2.9	3.4	2.8	3.8
A 20 2_79.9	79.9	0.30	0.56	—	—	—	—	2.9	3.4	2.8	3.8
A 20 2_92.3	92.3	0.29	0.55	—	—	—	—	—	—	—	—
A 20 3_109.2	109.2	0.29	0.55	0.31	0.75	2.8	3.3	2.9	3.4	2.8	3.8
A 20 3_120.5	120.5	0.29	0.55	0.31	0.75	2.8	3.3	2.9	3.4	2.8	3.8
A 20 3_129.1	129.1	0.29	0.55	0.31	0.75	2.8	3.3	2.9	3.4	2.8	3.8
A 20 3_146.1	146.1	0.29	0.55	0.31	0.75	2.8	3.3	2.9	3.4	2.8	3.8
A 20 3_163.4	163.4	0.28	0.54	0.30	0.74	2.8	3.3	2.9	3.4	2.8	3.8
A 20 3_178.3	178.3	0.28	0.54	0.30	0.74	2.8	3.3	2.9	3.4	2.8	3.8
A 20 3_199.2	199.2	0.28	0.54	0.30	0.74	2.8	3.3	2.9	3.4	2.8	3.8
A 20 3_221.3	221.3	0.28	0.54	0.30	0.74	2.8	3.3	2.9	3.4	2.8	3.8
A 20 3_260.5	260.5	0.28	0.54	0.30	0.74	2.8	3.3	2.9	3.4	2.8	3.8
A 20 3_292.8	292.8	0.28	0.54	0.30	0.74	2.8	3.3	2.9	3.4	2.8	3.8
A 20 3_329.4	329.4	0.28	0.54	0.30	0.74	2.8	3.3	2.9	3.4	2.8	3.8
A 20 3_380.9	380.9	0.28	0.54	0.30	0.74	2.8	3.3	2.9	3.4	2.8	3.8

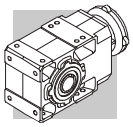

A 30

	i	J (•10-4) [kgm2]							
			IEC						
			63	71	80	90	100	112	
A 30 2_5.4	5.4	4.5	—	—	7.4	7.3	8.6	8.6	6.9
A 30 2_6.4	6.4	3.4	—	—	6.6	6.6	7.8	7.8	6.0
A 30 2_7.0	7.0	2.9	—	—	5.8	5.8	7.0	7.0	5.2
A 30 2_8.5	8.5	2.2	—	—	5.1	5.1	6.3	6.3	4.6
A 30 2_9.3	9.3	1.6	3.1	3.1	4.5	4.4	5.7	5.7	4.0
A 30 2_10.5	10.5	2.3	—	—	5.2	5.1	6.4	6.4	4.6
A 30 2_11.8	11.8	1.1	2.6	2.6	4.0	3.9	5.2	5.2	3.4
A 30 2_13.6	13.6	1.5	—	—	4.4	4.3	5.6	5.6	3.9
A 30 2_16.3	16.3	1.2	—	—	4.1	4.0	5.3	5.3	3.5
A 30 2_18.0	18.0	0.90	2.4	2.4	3.8	3.7	5.0	5.0	3.2
A 30 2_20.5	20.5	0.70	2.2	2.2	3.6	3.5	4.8	4.8	3.1
A 30 2_22.8	22.8	0.60	2.1	2.1	3.5	3.4	4.7	4.7	3.0
A 30 2_26.5	26.5	0.50	2.0	2.0	3.4	3.3	4.6	4.6	2.9
A 30 2_29.3	29.3	0.40	1.9	1.9	3.3	3.2	4.5	4.5	2.8
A 30 2_33.4	33.4	0.35	1.8	1.8	3.2	3.1	4.4	4.4	2.7
A 30 2_36.6	36.6	0.30	1.8	1.8	3.2	3.1	4.4	4.4	2.7
A 30 2_39.3	39.3	0.25	1.7	1.7	3.1	3.0	4.3	4.3	2.6
A 30 2_43.4	43.4	0.20	1.7	1.7	3.1	3.0	4.3	4.3	2.6
A 30 2_48.3	48.3	0.20	1.7	1.7	3.1	3.0	4.3	4.3	2.6
A 30 2_52.7	52.7	0.20	1.7	1.7	3.1	3.0	4.3	4.3	2.5
A 30 2_59.4	59.4	0.10	1.6	1.6	3.0	2.9	4.2	4.2	2.5
A 30 2_66.0	66.0	0.10	1.6	1.6	3.0	2.9	4.2	4.2	2.5
A 30 2_76.5	76.5	0.10	1.6	1.6	3.0	2.9	4.2	4.2	2.5
A 30 2_86.7	86.7	0.10	1.6	1.6	3.0	2.9	4.2	4.2	2.5
A 30 2_97.5	97.5	0.10	1.6	1.6	3.0	2.9	4.2	4.2	2.4
A 30 3_109.1	109.1	0.10	1.6	1.6	3.0	2.9	4.2	4.2	0.90
A 30 3_120.5	120.5	0.10	1.6	1.6	3.0	2.9	4.2	4.2	0.90
A 30 3_137.4	137.4	0.10	1.6	1.6	3.0	2.9	4.2	4.2	0.90
A 30 3_150.7	150.7	0.10	1.6	1.6	3.0	2.9	4.2	4.2	0.90
A 30 3_161.4	161.4	0.10	1.6	1.6	3.0	2.9	4.2	4.2	0.90
A 30 3_178.5	178.5	0.10	1.6	1.6	3.0	2.9	4.2	4.2	0.90
A 30 3_198.5	198.5	0.10	1.6	1.6	3.0	2.9	4.2	4.2	0.90
A 30 3_216.6	216.6	0.10	1.6	1.6	3.0	2.9	4.2	4.2	0.90
A 30 3_244.3	244.3	0.10	1.6	1.6	3.0	2.9	4.2	4.2	0.90
A 30 3_271.5	271.5	0.10	1.6	1.6	3.0	2.9	4.2	4.2	0.90
A 30 3_314.5	314.5	0.10	1.6	1.6	3.0	2.9	4.2	4.2	0.90
A 30 3_356.3	356.3	0.06	1.6	1.6	3.0	2.9	4.2	4.2	0.90
A 30 3_400.8	400.8	0.04	1.5	1.6	2.9	2.8	4.1	4.1	0.90

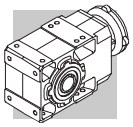

A 30

	i	J (•10-4) [kgm2]											
		SERVO											
		60A		60B 80A		95A		80C 95B 110A		95C 110B		130A	
		SK	SC	SK	SC	SK	SC	SK	SC	SK	SC	SK	SC
A 30 2_5.4	5.4	—	—	—	—	—	—	7.4	7.9	7.3	8.3	7.3	8.3
A 30 2_6.4	6.4	—	—	—	—	—	—	6.6	7.1	6.6	7.6	6.6	7.6
A 30 2_7.0	7.0	—	—	—	—	—	—	5.8	6.3	5.8	6.8	5.8	6.8
A 30 2_8.5	8.5	—	—	—	—	—	—	5.1	5.6	5.1	6.1	5.1	6.1
A 30 2_9.3	9.3	1.9	2.1	1.9	2.3	4.4	4.9	4.5	5.0	4.4	5.4	4.4	5.4
A 30 2_10.5	10.5	—	—	—	—	—	—	5.2	5.7	5.1	6.1	5.1	6.1
A 30 2_11.8	11.8	1.4	1.6	1.4	1.8	3.9	4.4	4.0	4.5	3.9	4.9	3.9	4.9
A 30 2_13.6	13.6	—	—	—	—	—	—	4.4	4.9	4.3	5.3	4.3	5.3
A 30 2_16.3	16.3	—	—	—	—	—	—	4.1	4.6	4.0	5.0	4.0	5.0
A 30 2_18.0	18.0	1.2	1.4	1.2	1.6	3.7	4.2	3.8	4.3	3.7	4.7	3.7	4.7
A 30 2_20.5	20.5	0.97	1.2	0.99	1.4	3.5	4.0	3.6	4.1	3.5	4.5	3.5	4.5
A 30 2_22.8	22.8	0.87	1.1	0.89	1.3	3.4	3.9	3.5	4.0	3.4	4.4	3.4	4.4
A 30 2_26.5	26.5	0.77	1.0	0.79	1.2	3.3	3.8	3.4	3.9	3.3	4.3	3.3	4.3
A 30 2_29.3	29.3	0.67	0.93	0.69	1.1	3.2	3.7	3.3	3.8	3.2	4.2	3.2	4.2
A 30 2_33.4	33.4	0.62	0.88	0.64	1.1	3.2	3.6	3.2	3.7	3.1	4.1	3.1	4.1
A 30 2_36.6	36.6	0.57	0.83	0.59	1.0	3.1	3.6	3.2	3.7	3.1	4.1	3.1	4.1
A 30 2_39.3	39.3	0.52	0.78	0.54	0.98	3.1	3.5	3.1	3.6	3.0	4.0	3.0	4.0
A 30 2_43.4	43.4	0.47	0.73	0.49	0.93	3.0	3.5	3.1	3.6	3.0	4.0	3.0	4.0
A 30 2_48.3	48.3	0.47	0.73	0.49	0.93	3.0	3.5	3.1	3.6	3.0	4.0	3.0	4.0
A 30 2_52.7	52.7	0.47	0.73	0.49	0.93	3.0	3.5	3.1	3.6	3.0	4.0	3.0	4.0
A 30 2_59.4	59.4	0.37	0.63	0.39	0.83	2.9	3.4	3.0	3.5	2.9	3.9	2.9	3.9
A 30 2_66.0	66.0	0.37	0.63	0.39	0.83	2.9	3.4	3.0	3.5	2.9	3.9	2.9	3.9
A 30 2_76.5	76.5	0.37	0.63	0.39	0.83	2.9	3.4	3.0	3.5	2.9	3.9	2.9	3.9
A 30 2_86.7	86.7	0.37	0.63	—	—	—	—	3.0	3.5	2.9	3.9	2.9	3.9
A 30 2_97.5	97.5	0.37	0.63	—	—	—	—	3.0	3.5	2.9	3.9	2.9	3.9
A 30 3_109.1	109.1	0.37	0.63	0.39	0.83	2.9	3.4	3.0	3.5	2.9	3.9	—	—
A 30 3_120.5	120.5	0.37	0.63	0.39	0.83	2.9	3.4	3.0	3.5	2.9	3.9	—	—
A 30 3_137.4	137.4	0.37	0.63	0.39	0.83	2.9	3.4	3.0	3.5	2.9	3.9	—	—
A 30 3_150.7	150.7	0.37	0.63	0.39	0.83	2.9	3.4	3.0	3.5	2.9	3.9	—	—
A 30 3_161.4	161.4	0.37	0.63	0.39	0.83	2.9	3.4	3.0	3.5	2.9	3.9	—	—
A 30 3_178.5	178.5	0.37	0.63	0.39	0.83	2.9	3.4	3.0	3.5	2.9	3.9	—	—
A 30 3_198.5	198.5	0.37	0.63	0.39	0.83	2.9	3.4	3.0	3.5	2.9	3.9	—	—
A 30 3_216.6	216.6	0.37	0.63	0.39	0.83	2.9	3.4	3.0	3.5	2.9	3.9	—	—
A 30 3_244.3	244.3	0.37	0.63	0.39	0.83	2.9	3.4	3.0	3.5	2.9	3.9	—	—
A 30 3_271.5	271.5	0.37	0.63	0.39	0.83	2.9	3.4	3.0	3.5	2.9	3.9	—	—
A 30 3_314.5	314.5	0.37	0.63	0.39	0.83	2.9	3.4	3.0	3.5	2.9	3.9	—	—
A 30 3_356.3	356.3	0.33	0.59	0.35	0.79	2.9	3.3	3.0	3.5	2.9	3.9	—	—
A 30 3_400.8	400.8	0.31	0.57	0.33	0.77	2.9	3.3	2.9	3.4	2.8	3.8	—	—

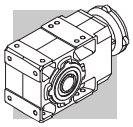

A 35

	i	J (•10-4) [kgm2]								
			IEC							
			63	71	80	90	100	112	132	
A 35 2_5.4	5.4	7.3	—	—	10	9.9	11	11	24	9.4
A 35 2_6.4	6.4	5.4	—	—	8.1	8.0	9.2	9.2	22	7.4
A 35 2_7.0	7.0	4.6	—	—	7.3	7.2	8.4	8.4	21	6.6
A 35 2_8.5	8.5	3.3	—	—	6.1	5.9	7.1	7.1	20	5.4
A 35 2_9.3	9.3	2.8	3.5	3.5	5.6	5.4	6.6	6.6	19	4.9
A 35 2_10.6	10.6	2.1	2.9	2.9	4.9	4.8	6.0	6.0	19	4.2
A 35 2_11.8	11.8	1.8	2.5	2.5	4.6	4.4	5.7	5.7	18	3.9
A 35 2_13.1	13.1	3.0	—	—	5.7	5.6	6.8	6.8	—	5.0
A 35 2_15.5	15.5	2.2	—	—	5.0	4.9	6.1	6.1	—	4.3
A 35 2_17.0	17.0	2.0	—	—	4.7	4.6	5.8	5.8	—	4.0
A 35 2_20.4	20.4	1.6	—	—	4.3	4.2	5.4	5.4	—	3.6
A 35 2_22.5	22.5	1.3	2.0	2.0	4.1	3.9	5.1	5.1	—	3.4
A 35 2_25.7	25.7	0.97	1.7	1.7	3.7	3.6	4.8	4.8	—	3.0
A 35 2_28.4	28.4	0.86	1.6	1.6	3.6	3.5	4.7	4.7	—	2.9
A 35 2_33.2	33.2	0.69	1.4	1.4	3.5	3.3	4.5	4.5	—	2.8
A 35 2_36.6	36.6	0.58	1.3	1.3	3.3	3.2	4.4	4.4	—	2.6
A 35 2_41.8	41.8	0.48	1.2	1.2	3.2	3.1	4.3	4.3	—	2.5
A 35 2_45.8	45.8	0.42	1.1	1.1	3.2	3.1	4.3	4.3	—	2.5
A 35 2_49.1	49.1	0.38	1.1	1.1	3.1	3.0	4.2	4.2	—	2.4
A 35 2_54.3	54.3	0.33	1.1	1.0	3.1	3.0	4.2	4.2	—	2.4
A 35 2_60.4	60.4	0.29	1.0	1.0	3.0	2.9	4.1	4.1	—	2.3
A 35 2_65.8	65.8	0.25	1.0	1.0	3.0	2.9	4.1	4.1	—	2.3
A 35 2_74.3	74.3	0.21	0.95	0.93	3.0	2.8	4.1	4.1	—	2.3
A 35 2_82.5	82.5	0.18	0.92	0.90	2.9	2.8	4.0	4.0	—	2.2
A 35 2_95.6	95.6	0.15	0.88	0.87	2.9	2.8	4.0	4.0	—	2.2
A 35 3_105.5	105.5	0.11	0.89	0.87	2.9	2.8	4.0	4.0	—	0.80
A 35 3_116.9	116.9	0.11	0.88	0.87	2.9	2.8	4.0	4.0	—	0.79
A 35 3_136.3	136.3	0.10	0.87	0.86	2.9	2.8	4.0	4.0	—	0.78
A 35 3_150.6	150.6	0.09	0.86	0.85	2.9	2.8	4.0	4.0	—	0.77
A 35 3_171.8	171.8	0.08	0.86	0.84	2.9	2.8	4.0	4.0	—	0.77
A 35 3_188.3	188.3	0.08	0.85	0.84	2.9	2.7	4.0	4.0	—	0.76
A 35 3_201.8	201.8	0.08	0.85	0.84	2.9	2.7	4.0	4.0	—	0.76
A 35 3_223.2	223.2	0.08	0.85	0.84	2.9	2.7	4.0	4.0	—	0.76
A 35 3_248.1	248.1	0.07	0.85	0.83	2.9	2.7	4.0	4.0	—	0.76
A 35 3_270.7	270.7	0.07	0.84	0.83	2.9	2.7	4.0	4.0	—	0.75
A 35 3_305.4	305.4	0.07	0.84	0.83	2.9	2.7	4.0	4.0	—	0.75
A 35 3_339.3	339.3	0.07	0.84	0.83	2.9	2.7	4.0	4.0	—	0.75
A 35 3_393.2	393.2	0.07	0.84	0.83	2.9	2.7	3.9	3.9	—	0.75

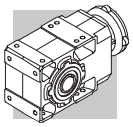

A 35

	i	J (•10-4) [kgm2]											
		SERVO											
		60A		60B 80A		95A		80C 95B 110A		95C 110B		130A	
		SK	SC	SK	SC	SK	SC	SK	SC	SK	SC	SK	SC
A 35 2_5.4	5.4	—	—	—	—	—	—	10	11	9.9	10.9	9.9	11
A 35 2_6.4	6.4	—	—	—	—	—	—	8.1	8.6	8.0	9.0	8.0	9.0
A 35 2_7.0	7.0	—	—	—	—	—	—	7.3	7.8	7.2	8.2	7.2	8.2
A 35 2_8.5	8.5	—	—	—	—	—	—	6.1	6.6	5.9	6.9	5.9	6.9
A 35 2_9.3	9.3	3.1	3.3	3.1	3.5	5.6	6.1	5.6	6.1	5.4	6.4	5.4	6.4
A 35 2_10.6	10.6	2.4	2.6	2.4	2.8	4.9	5.4	4.9	5.4	4.8	5.8	4.8	5.8
A 35 2_11.8	11.8	2.1	2.3	2.1	2.5	4.6	5.1	4.6	5.1	4.4	5.4	4.4	5.4
A 35 2_13.1	13.1	—	—	—	—	—	—	5.7	6.2	5.6	6.6	5.6	6.6
A 35 2_15.5	15.5	—	—	—	—	—	—	5.0	5.5	4.9	5.9	4.9	5.9
A 35 2_17.0	17.0	—	—	—	—	—	—	4.7	5.2	4.6	5.6	4.6	5.6
A 35 2_20.4	20.4	—	—	—	—	—	—	4.3	4.8	4.2	5.2	4.2	5.2
A 35 2_22.5	22.5	1.6	1.8	1.6	2.0	4.1	4.6	4.1	4.6	3.9	4.9	3.9	4.9
A 35 2_25.7	25.7	1.2	1.5	1.3	1.7	3.8	4.2	3.7	4.2	3.6	4.6	3.6	4.6
A 35 2_28.4	28.4	1.1	1.4	1.2	1.6	3.7	4.1	3.6	4.1	3.5	4.5	3.5	4.5
A 35 2_33.2	33.2	0.96	1.2	0.98	1.4	3.5	3.9	3.5	4.0	3.3	4.3	3.3	4.3
A 35 2_36.6	36.6	0.85	1.1	0.87	1.3	3.4	3.8	3.3	3.8	3.2	4.2	3.2	4.2
A 35 2_41.8	41.8	0.75	1.0	0.77	1.2	3.3	3.7	3.2	3.7	3.1	4.1	3.1	4.1
A 35 2_45.8	45.8	0.69	0.95	0.71	1.1	3.2	3.7	3.2	3.7	3.1	4.1	3.1	4.1
A 35 2_49.1	49.1	0.65	0.91	0.67	1.1	3.2	3.6	3.1	3.6	3.0	4.0	3.0	4.0
A 35 2_54.3	54.3	0.60	0.86	0.62	1.1	3.2	3.6	3.1	3.6	3.0	4.0	3.0	4.0
A 35 2_60.4	60.4	0.56	0.82	0.58	1.0	3.1	3.5	3.0	3.5	2.9	3.9	2.9	3.9
A 35 2_65.8	65.8	0.52	0.78	0.54	0.98	3.1	3.5	3.0	3.5	2.9	3.9	2.9	3.9
A 35 2_74.3	74.3	0.48	0.74	0.50	0.94	3.0	3.5	3.0	3.5	2.8	3.8	2.8	3.8
A 35 2_82.5	82.5	0.45	0.71	0.47	0.91	3.0	3.4	2.9	3.4	2.8	3.8	2.8	3.8
A 35 2_95.6	95.6	0.42	0.68	0.44	0.88	3.0	3.4	2.9	3.4	2.8	3.8	2.8	3.8
A 35 3_105.5	105.5	0.38	0.64	0.40	0.84	2.9	3.4	2.9	3.4	2.8	3.8	—	—
A 35 3_116.9	116.9	0.38	0.64	0.40	0.84	2.9	3.4	2.9	3.4	2.8	3.8	—	—
A 35 3_136.3	136.3	0.37	0.63	0.39	0.83	2.9	3.4	2.9	3.4	2.8	3.8	—	—
A 35 3_150.6	150.6	0.36	0.62	0.38	0.82	2.9	3.3	2.9	3.4	2.8	3.8	—	—
A 35 3_171.8	171.8	0.35	0.61	0.37	0.81	2.9	3.3	2.9	3.4	2.8	3.8	—	—
A 35 3_188.3	188.3	0.35	0.61	0.37	0.81	2.9	3.3	2.9	3.4	2.7	3.7	—	—
A 35 3_201.8	201.8	0.35	0.61	0.37	0.81	2.9	3.3	2.9	3.4	2.7	3.7	—	—
A 35 3_223.2	223.2	0.35	0.61	0.37	0.81	2.9	3.3	2.9	3.4	2.7	3.7	—	—
A 35 3_248.1	248.1	0.34	0.60	0.36	0.80	2.9	3.3	2.9	3.4	2.7	3.7	—	—
A 35 3_270.7	270.7	0.34	0.60	0.36	0.80	2.9	3.3	2.9	3.4	2.7	3.7	—	—
A 35 3_305.4	305.4	0.34	0.60	0.36	0.80	2.9	3.3	2.9	3.4	2.7	3.7	—	—
A 35 3_339.3	339.3	0.34	0.60	0.36	0.80	2.9	3.3	2.9	3.4	2.7	3.7	—	—
A 35 3_393.2	393.2	0.34	0.60	0.36	0.80	2.9	3.3	2.9	3.4	2.7	3.7	—	—

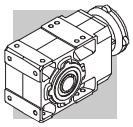

A 41

	i	J (•10-4) [kgm2]								
			IEC							
			63	71	80	90	100	112	132	
A 41 2_5.2	5.2	13	—	—	16	16	17	17	32	23
A 41 2_7.1	7.1	7.3	—	—	10	10	11	11	26	18
A 41 2_8.3	8.3	5.9	—	—	8.8	8.7	10	10	25	16
A 41 2_9.2	9.2	4.5	—	—	7.4	7.3	8.6	8.6	23	15
A 41 2_10.1	10.1	5.9	—	—	8.8	8.7	10	10	25	16
A 41 2_11.7	11.7	2.9	4.4	4.4	5.8	5.7	7.0	7.0	22	13
A 41 2_13.8	13.8	3.6	—	—	6.5	6.4	7.7	7.7	23	14
A 41 2_16.1	16.1	2.9	—	—	5.8	5.7	7.0	7.0	22	13
A 41 2_17.8	17.8	2.2	—	—	5.1	5.0	6.3	6.3	21	11
A 41 2_22.7	22.7	1.5	3.0	3.0	4.4	4.3	5.6	5.6	20	11
A 41 2_28.3	28.3	1.1	2.6	2.6	4.0	3.9	5.2	5.2	20	10
A 41 2_35.9	35.9	1.7	3.2	3.2	4.6	4.5	5.8	5.8	20	9.8
A 41 2_45.1	45.1	1.5	3.0	3.0	4.4	4.3	5.6	5.6	20	9.6
A 41 2_48.3	48.3	1.4	2.9	2.9	4.3	4.2	5.5	5.5	—	9.5
A 41 2_53.1	53.1	1.4	2.9	2.9	4.3	4.2	5.5	5.5	—	9.5
A 41 2_58.8	58.8	1.3	2.8	2.8	4.2	4.1	5.4	5.4	—	9.4
A 41 2_64.2	64.2	1.3	2.8	2.8	4.2	4.1	5.4	5.4	—	9.4
A 41 2_71.3	71.3	1.2	2.7	2.7	4.1	4.0	5.3	5.3	—	9.3
A 41 2_79.2	79.2	1.2	2.7	2.7	4.1	4.0	5.3	5.3	—	9.3
A 41 3_92.8	92.8	1.1	2.6	2.6	4.0	3.9	5.2	5.2	—	9.2
A 41 3_115.9	115.9	0.20	1.7	1.7	2.9	3.0	4.3	4.3	—	2.1
A 41 3_146.9	146.9	0.10	1.6	1.6	2.8	2.9	4.2	4.2	—	2.1
A 41 3_184.4	184.4	0.10	1.6	1.6	2.8	2.9	4.2	4.2	—	2.1
A 41 3_197.5	197.5	0.10	1.6	1.6	2.8	2.9	4.2	4.2	—	2.0
A 41 3_217.4	217.4	0.10	1.6	1.6	2.8	2.9	4.2	4.2	—	2.0
A 41 3_240.6	240.6	0.10	1.6	1.6	2.8	2.9	4.2	4.2	—	2.0
A 41 3_262.5	262.5	0.10	1.6	1.6	2.8	2.9	4.2	4.2	—	2.0
A 41 3_291.7	291.7	0.10	1.6	1.6	2.8	2.9	4.2	4.2	—	2.0
A 41 3_324.2	324.2	0.10	1.6	1.6	2.8	2.9	4.2	4.2	—	2.0
A 41 3_376.8	376.8	0.10	1.6	1.6	2.8	2.9	4.2	4.2	—	2.0

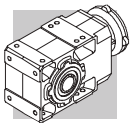

A 41

	i	J (•10-4) [kgm2]																	
		SERVO																	
		60A		60B 80A		80B		95A		80C 95B 110A		95C 110B		130A		130B 180A		180B	
		SK	SC	SK	SC	SK	SC	SK	SC	SK	SC	SK	SC	SK	SC	SK	SC	SK	SC
A 41 2_5.2	5.2	—	—	—	—	—	—	—	—	16	16.5	16	17	16	17	30	32	32	37
A 41 2_7.1	7.1	—	—	—	—	—	—	—	—	10	10.5	10	11	10	11	24	27	26	31
A 41 2_8.3	8.3	—	—	—	—	—	—	—	—	8.8	9.3	8.7	9.7	8.7	9.7	23	25	25	30
A 41 2_9.2	9.2	—	—	—	—	—	—	—	—	7.4	7.9	7.3	8.3	7.3	8.3	21	24	23	28
A 41 2_10.1	10.1	—	—	—	—	—	—	—	—	8.8	9.3	8.7	9.7	8.7	9.7	23	25	25	30
A 41 2_11.7	11.7	—	—	—	—	5.7	6.2	5.7	6.2	5.8	6.3	5.7	6.7	5.7	6.7	20	22	22	27
A 41 2_13.8	13.8	—	—	—	—	—	—	—	—	6.5	7.0	6.4	7.4	6.4	7.4	21	23	23	28
A 41 2_16.1	16.1	—	—	—	—	—	—	—	—	5.8	6.3	5.7	6.7	5.7	6.7	20	22	22	27
A 41 2_17.8	17.8	—	—	—	—	—	—	—	—	5.1	5.6	5.0	6.0	5.0	6.0	19	22	21	26
A 41 2_22.7	22.7	—	—	—	—	4.3	4.8	4.3	4.8	4.4	4.9	4.3	5.3	4.3	5.3	18	21	20	25
A 41 2_28.3	28.3	—	—	—	—	3.9	4.4	3.9	4.4	4.0	4.5	3.9	4.9	3.9	4.9	18	21	20	25
A 41 2_35.9	35.9	—	—	—	—	4.5	5.0	4.5	5.0	4.6	5.1	4.5	5.5	4.5	5.5	19	21	20	25
A 41 2_45.1	45.1	—	—	—	—	4.3	4.8	4.3	4.8	4.4	4.9	4.3	5.3	4.3	5.3	18	21	20	25
A 41 2_48.3	48.3	—	—	—	—	4.2	4.7	4.2	4.7	4.3	4.8	4.2	5.2	4.2	5.2	—	—	—	—
A 41 2_53.1	53.1	—	—	—	—	4.2	4.7	4.2	4.7	4.3	4.8	4.2	5.2	4.2	5.2	—	—	—	—
A 41 2_58.8	58.8	—	—	—	—	4.1	4.6	4.1	4.6	4.2	4.7	4.1	5.1	4.1	5.1	—	—	—	—
A 41 2_64.2	64.2	—	—	—	—	4.1	4.6	4.1	4.6	4.2	4.7	4.1	5.1	4.1	5.1	—	—	—	—
A 41 2_71.3	71.3	—	—	—	—	4.0	4.5	4.0	4.5	4.1	4.6	4.0	5.0	4.0	5.0	—	—	—	—
A 41 2_79.2	79.2	—	—	—	—	4.0	4.5	4.0	4.5	4.1	4.6	4.0	5.0	4.0	5.0	—	—	—	—
A 41 3_92.8	92.8	1.4	1.6	1.4	1.8	—	—	3.9	4.4	4.0	4.5	3.9	4.9	—	—	—	—	—	—
A 41 3_115.9	115.9	0.47	0.73	0.49	0.93	—	—	3.0	3.5	2.9	3.4	3.0	4.0	—	—	—	—	—	—
A 41 3_146.9	146.9	0.37	0.63	0.39	0.83	—	—	2.9	3.4	2.8	3.3	2.9	3.9	—	—	—	—	—	—
A 41 3_184.4	184.4	0.37	0.63	0.39	0.83	—	—	2.9	3.4	2.8	3.3	2.9	3.9	—	—	—	—	—	—
A 41 3_197.5	197.5	0.37	0.63	0.39	0.83	—	—	2.9	3.4	2.8	3.3	2.9	3.9	—	—	—	—	—	—
A 41 3_217.4	217.4	0.37	0.63	0.39	0.83	—	—	2.9	3.4	2.8	3.3	2.9	3.9	—	—	—	—	—	—
A 41 3_240.6	240.6	0.37	0.63	0.39	0.83	—	—	2.9	3.4	2.8	3.3	2.9	3.9	—	—	—	—	—	—
A 41 3_262.5	262.5	0.37	0.63	0.39	0.83	—	—	2.9	3.4	2.8	3.3	2.9	3.9	—	—	—	—	—	—
A 41 3_291.7	291.7	0.37	0.63	0.39	0.83	—	—	2.9	3.4	2.8	3.3	2.9	3.9	—	—	—	—	—	—
A 41 3_324.2	324.2	0.37	0.63	0.39	0.83	—	—	2.9	3.4	2.8	3.3	2.9	3.9	—	—	—	—	—	—
A 41 3_376.8	376.8	0.37	0.63	0.39	0.83	—	—	2.9	3.4	2.8	3.3	2.9	3.9	—	—	—	—	—	—

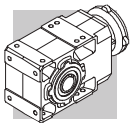

A 50

	i	J (•10-4) [kgm2]										
			IEC									
			63	71	80	90	100	112	132	160	180	
A 50 2_7.7	7.7	15	—	—	18	18	19	19	34	93	91	24
A 50 2_9.7	9.7	10	—	—	13	13	14	14	29	89	86	19
A 50 2_13.1	13.1	6.3	—	—	9.2	9.1	10	10	25	85	82	15
A 50 2_16.6	16.6	4.2	—	—	7.0	7.0	8.2	8.2	23	82	80	13
A 50 2_20.9	20.9	2.8	4.2	4.2	5.7	5.6	6.9	6.9	22	81	79	12
A 50 3_24.0	24.0	6.0	—	—	8.9	8.8	10	10	25	84	82	15
A 50 3_26.4	26.4	5.8	—	—	8.7	8.6	9.9	9.9	25	84	82	15
A 50 3_32.4	32.4	4.0	—	—	6.8	6.8	8.1	8.1	23	82	80	13
A 50 3_35.6	35.6	3.9	—	—	6.7	6.7	8.0	8.0	23	82	80	13
A 50 3_40.9	40.9	2.7	—	—	5.6	5.5	6.8	6.8	22	81	79	12
A 50 3_45.0	45.0	2.6	—	—	5.5	5.4	6.7	6.7	22	81	79	12
A 50 3_51.7	51.7	1.9	3.4	3.4	4.7	4.7	6.0	6.0	21	80	78	11
A 50 3_56.8	56.8	1.9	3.3	3.3	4.7	4.6	5.9	5.9	21	80	78	11
A 50 3_63.9	63.9	1.4	2.9	2.8	4.2	4.2	5.5	5.5	20	80	77	11
A 50 3_70.2	70.2	1.4	2.8	2.8	4.2	4.1	5.4	5.4	20	80	77	10
A 50 3_81.5	81.5	0.90	2.4	2.4	3.8	3.7	5.0	5.0	20	79	77	10
A 50 3_89.5	89.5	0.90	2.4	2.4	3.7	3.7	5.0	5.0	20	79	77	10
A 50 3_99.5	99.5	0.60	2.1	2.1	3.5	3.4	4.7	4.7	20	79	77	9.7
A 50 3_109.4	109.4	0.60	2.1	2.1	3.5	3.4	4.7	4.7	20	79	77	9.7
A 50 3_118.0	118.0	0.50	2.0	2.0	3.4	3.3	4.6	4.6	—	—	—	9.6
A 50 3_129.7	129.7	0.50	2.0	2.0	3.4	3.3	4.6	4.6	—	—	—	9.6
A 50 3_140.6	140.6	0.40	1.8	1.8	3.2	3.2	4.4	4.4	—	—	—	9.4
A 50 3_154.6	154.6	0.40	1.8	1.8	3.2	3.2	4.4	4.4	—	—	—	9.4
A 50 3_173.4	173.4	0.30	1.7	1.7	3.1	3.0	4.3	4.3	—	—	—	9.3
A 50 3_190.6	190.6	0.20	1.7	1.7	3.1	3.0	4.3	4.3	—	—	—	9.3

For the values of the moment of inertia of 4-stage gearboxes, please contact our Technical Service department.

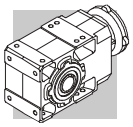

A 50

	i	J (•10-4) [kgm2]									
		SERVO									
		80B 95A		80C 95B 110A		95C 110B 130A		130B 180A		180B	
		SK	SC	SK	SC	SK	SC	SK	SC	SK	SC
A 50 2_7.7	7.7	—	—	18	19	18	19	32	34	34	39
A 50 2_9.7	9.7	—	—	13	14	13	14	27	29	29	34
A 50 2_13.1	13.1	—	—	9.2	9.7	9.1	10	23	26	25	30
A 50 2_16.6	16.6	—	—	7.0	7.5	7.0	8.0	21	24	23	28
A 50 2_20.9	20.9	5.6	6.1	5.7	6.2	5.6	6.6	20	22	22	27
A 50 3_24.0	24.0	—	—	8.9	9.4	8.8	9.8	23	25	25	30
A 50 3_26.4	26.4	—	—	8.7	9.2	8.6	9.6	23	25	25	30
A 50 3_32.4	32.4	—	—	6.8	7.3	6.8	7.8	21	23	23	28
A 50 3_35.6	35.6	—	—	6.7	7.2	6.7	7.7	21	23	23	28
A 50 3_40.9	40.9	—	—	5.6	6.1	5.5	6.5	20	22	22	27
A 50 3_45.0	45.0	—	—	5.5	6.0	5.4	6.4	20	22	22	27
A 50 3_51.7	51.7	4.7	5.1	4.7	5.2	4.7	5.7	19	21	21	26
A 50 3_56.8	56.8	4.7	5.1	4.7	5.2	4.6	5.6	19	21	21	26
A 50 3_63.9	63.9	4.2	4.7	4.2	5.2	4.2	5.2	18	21	20	25
A 50 3_70.2	70.2	4.2	4.7	4.2	5.2	4.1	5.1	18	21	20	25
A 50 3_81.5	81.5	3.7	4.1	3.8	4.3	3.7	4.7	18	20	20	25
A 50 3_89.5	89.5	3.7	4.1	3.7	4.2	3.7	4.7	18	20	20	25
A 50 3_99.5	99.5	3.4	3.9	3.5	4.0	3.4	4.4	18	20	20	25
A 50 3_109.4	109.4	3.4	3.9	3.5	4.0	3.4	4.4	18	20	20	25
A 50 3_118.0	118.0	3.3	3.8	3.4	4.0	3.3	4.3	—	—	—	—
A 50 3_129.7	129.7	3.3	3.8	3.4	4.0	3.3	4.3	—	—	—	—
A 50 3_140.6	140.6	3.2	3.7	3.2	3.7	3.2	4.2	—	—	—	—
A 50 3_154.6	154.6	3.2	3.7	3.2	3.7	3.2	4.2	—	—	—	—
A 50 3_173.4	173.4	3.1	3.6	3.1	3.6	3.0	4.0	—	—	—	—
A 50 3_190.6	190.6	3.0	3.5	3.1	3.6	3.0	4.0	—	—	—	—

For the values of the moment of inertia of 4-stage gearboxes, please contact our Technical Service department.

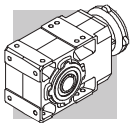

A 55

	i	J (•10-4) [kgm2]										
			IEC									
			63	71	80	90	100	112	132	160	180	
A 55 2_4.9	4.9	61	—	—	—	—	—	—	77	123	120	70
A 55 2_6.4	6.4	41	—	—	—	—	—	—	57	103	100	50
A 55 2_8.5	8.5	26	—	—	—	—	—	—	42	88	85	35
A 55 2_10.4	10.4	19	—	—	—	—	—	—	35	81	78	28
A 55 2_13.1	13.1	12	—	—	14	14	17	17	28	74	72	21
A 55 2_15.7	15.7	8.9	—	—	11	11	14	14	25	71	68	18
A 55 2_19.2	19.2	6.2	—	—	8.6	8.5	11	11	23	68	66	15
A 55 3_23.8	23.8	11	—	—	13	13	16	16	27	73	70	20
A 55 3_29.9	29.9	7.9	—	—	10	10	13	13	24	70	67	17
A 55 3_40.3	40.3	5.3	—	—	7.8	7.6	10	10	22	68	65	14
A 55 3_51.0	51.0	3.6	—	—	6.0	5.9	8.6	8.6	20	66	63	13
A 55 3_64.3	64.3	2.6	3.1	3.0	5.1	5.0	7.7	7.7	19	65	62	12
A 55 3_79.5	79.5	2.0	2.4	2.4	4.5	4.4	7.1	7.1	18	64	62	11
A 55 3_101.4	101.4	1.3	1.8	1.8	3.8	3.7	6.5	6.5	18	64	61	10
A 55 3_123.9	123.9	1.0	1.5	1.5	3.6	3.4	6.2	6.2	17	63	61	10
A 55 3_132.7	132.7	0.71	1.4	1.4	3.5	3.3	6.1	6.1	—	—	—	9.5
A 55 3_146.8	146.8	0.66	1.4	1.4	3.4	3.3	6.0	6.0	—	—	—	9.4
A 55 3_160.4	160.4	0.58	1.3	1.3	3.3	3.2	6.0	6.0	—	—	—	9.4
A 55 3_175.0	175.0	0.50	1.2	1.2	3.3	3.1	5.9	5.9	—	—	—	9.3
A 55 3_194.2	194.2	0.43	1.2	1.2	3.2	3.1	5.8	5.8	—	—	—	9.2

For the values of the moment of inertia of 4-stage gearboxes, please contact our Technical Service department.

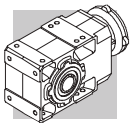

A 55

	i	J (•10-4) [kgm2]									
		SERVO									
		80B 95A		80C 95B 110A		95C 110B 130A		130B 180A		180B	
		SK	SC	SK	SC	SK	SC	SK	SC	SK	SC
A 55 2_4.9	4.9	—	—	—	—	—	—	78	80	77	82
A 55 2_6.4	6.4	—	—	—	—	—	—	58	60	57	62
A 55 2_8.5	8.5	—	—	—	—	—	—	43	45	42	47
A 55 2_10.4	10.4	—	—	—	—	—	—	36	38	35	40
A 55 2_13.1	13.1	—	—	14	15	14	15	29	31	28	33
A 55 2_15.7	15.7	—	—	11	12	11	12	26	28	25	30
A 55 2_19.2	19.2	—	—	8.6	9.1	8.5	9.5	23	26	23	28
A 55 3_23.8	23.8	—	—	13	14	13	14	28	30	27	32
A 55 3_29.9	29.9	—	—	10	11	10	11	25	27	24	29
A 55 3_40.3	40.3	—	—	7.8	8.3	7.6	8.6	22	25	22	27
A 55 3_51.0	51.0	—	—	6.0	6.5	5.9	6.9	21	23	20	25
A 55 3_64.3	64.3	5.4	5.9	5.1	5.6	5.0	6.0	20	22	19	24
A 55 3_79.5	79.5	4.8	5.3	4.5	5.0	4.4	5.4	19	21	18	23
A 55 3_101.4	101.4	4.1	4.6	3.8	4.3	3.7	4.7	18	21	18	23
A 55 3_123.9	123.9	3.8	4.3	3.6	4.1	3.4	4.4	18	20	17	22
A 55 3_132.7	132.7	3.5	4.0	3.5	4.0	3.3	4.3	—	—	—	—
A 55 3_146.8	146.8	3.5	3.9	3.4	3.9	3.3	4.3	—	—	—	—
A 55 3_160.4	160.4	3.4	3.8	3.3	3.8	3.2	4.2	—	—	—	—
A 55 3_175.0	175.0	3.3	3.8	3.3	3.8	3.1	4.1	—	—	—	—
A 55 3_194.2	194.2	3.3	3.7	3.2	3.7	3.1	4.1	—	—	—	—

For the values of the moment of inertia of 4-stage gearboxes, please contact our Technical Service department.

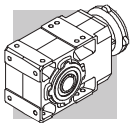

A 60

	i	J (•10-4) [kgm2]										
			IEC									
			63	71	80	90	100	112	132	160	180	
A 60 2_7.9	7.9	36	—	—	—	—	—	—	54	114	112	57
A 60 2_10.3	10.3	23	—	—	25	25	27	27	41	101	99	44
A 60 2_12.7	12.7	16	—	—	19	19	20	20	35	94	92	37
A 60 2_16.7	16.7	9.4	—	—	12	12	14	14	28	88	85	30
A 60 2_20.6	20.6	6.7	—	—	9.6	9.5	11	11	26	85	83	28
A 60 3_25.7	25.7	14	—	—	17	17	18	18	33	92	90	35
A 60 3_27.9	27.9	14	—	—	17	17	18	18	33	92	90	35
A 60 3_31.7	31.7	10	—	—	13	13	15	15	29	89	86	31
A 60 3_34.3	34.3	10	—	—	13	13	14	14	29	89	86	31
A 60 3_41.7	41.7	6.1	—	—	9.0	8.9	10	10	25	84	82	27
A 60 3_45.2	45.2	6.1	—	—	8.9	8.9	10	10	25	84	82	27
A 60 3_51.3	51.3	5.0	—	—	7.4	7.4	8.7	8.7	24	83	81	26
A 60 3_55.6	55.6	4.5	—	—	7.4	7.3	8.6	8.6	23	83	81	26
A 60 3_65.0	65.0	3.2	4.7	4.6	6.1	6.0	7.3	7.3	22	82	79	24
A 60 3_70.4	70.4	3.2	4.7	4.6	6.1	6.0	7.3	7.3	22	81	79	24
A 60 3_79.7	79.7	2.1	3.6	3.5	5.0	4.9	6.2	6.2	21	80	78	23
A 60 3_86.4	86.4	2.1	3.6	3.5	5.0	4.9	6.2	6.2	21	80	78	23
A 60 3_99.5	99.5	2.0	3.5	3.4	4.3	4.3	5.6	5.6	20	80	78	23
A 60 3_107.8	107.8	1.5	3.0	2.9	4.3	4.3	5.6	5.6	20	80	78	22
A 60 3_123.0	123.0	1.1	2.6	2.5	4.0	3.9	5.2	5.2	20	79	77	22
A 60 3_133.3	133.3	1.1	2.6	2.5	3.9	3.9	5.2	5.2	20	79	77	22
A 60 3_144.0	144.0	0.80	2.3	2.2	3.7	3.6	5.0	5.0	—	—	—	22
A 60 3_156.0	156.0	0.80	2.3	2.2	3.7	3.6	5.0	5.0	—	—	—	22
A 60 3_171.5	171.5	0.60	2.1	2.0	3.5	3.4	4.7	4.7	—	—	—	22
A 60 3_185.8	185.8	0.60	2.1	2.0	3.5	3.4	4.7	4.7	—	—	—	22

For the values of the moment of inertia of 4-stage gearboxes, please contact our Technical Service department.

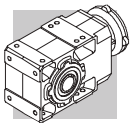

A 60

	i	J (•10-4) [kgm2]									
		SERVO									
		95A		80C 95B 110A		95C 110B 130A		130B 180A		180B	
		SK	SC	SK	SC	SK	SC	SK	SC	SK	SC
A 60 2_7.9	7.9	—	—	—	—	—	—	53	55	54	59
A 60 2_10.3	10.3	—	—	25	26	25	26	40	42	41	46
A 60 2_12.7	12.7	—	—	19	20	19	20	33	35	35	40
A 60 2_16.7	16.7	—	—	12	13	12	13	26	29	28	33
A 60 2_20.6	20.6	—	—	9.6	10	9.5	10	24	26	26	31
A 60 3_25.7	25.7	—	—	17	18	17	18	31	33	33	38
A 60 3_27.9	27.9	—	—	17	18	17	18	31	33	33	38
A 60 3_31.7	31.7	—	—	13	14	13	14	27	29	29	34
A 60 3_34.3	34.3	—	—	13	14	13	14	27	29	29	34
A 60 3_41.7	41.7	—	—	9.0	9.5	8.9	9.9	23	26	25	30
A 60 3_45.2	45.2	—	—	8.9	9.4	8.9	9.9	23	26	25	30
A 60 3_51.3	51.3	—	—	7.4	7.9	7.4	8.4	22	24	24	29
A 60 3_55.6	55.6	—	—	7.4	7.9	7.3	8.3	21	24	23	28
A 60 3_65.0	65.0	6.0	6.5	6.1	6.6	6.0	7.0	20	23	22	27
A 60 3_70.4	70.4	6.0	6.5	6.1	6.6	6.0	7.0	20	23	22	27
A 60 3_79.7	79.7	4.9	5.4	5.0	5.5	4.9	5.9	19	22	21	26
A 60 3_86.4	86.4	4.9	5.4	5.0	5.5	4.9	5.9	19	22	21	26
A 60 3_99.5	99.5	4.8	5.3	4.3	4.8	4.3	5.3	19	21	20	25
A 60 3_107.8	107.8	4.3	4.8	4.3	4.8	4.3	5.3	18	21	20	25
A 60 3_123.0	123.0	3.9	4.4	4.0	4.5	3.9	4.9	18	21	20	25
A 60 3_133.3	133.3	3.9	4.4	3.9	4.4	3.9	4.9	18	21	20	25
A 60 3_144.0	144.0	3.6	4.1	3.7	4.2	3.6	4.6	—	—	—	—
A 60 3_156.0	156.0	3.6	4.1	3.7	4.2	3.6	4.6	—	—	—	—
A 60 3_171.5	171.5	3.4	3.9	3.5	4.0	3.4	4.4	—	—	—	—
A 60 3_185.8	185.8	3.4	3.9	3.5	4.0	3.4	4.4	—	—	—	—

For the values of the moment of inertia of 4-stage gearboxes, please contact our Technical Service department.

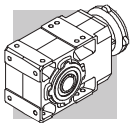

A 70

	i	J (•10-4) [kgm2]											
			IEC										
			80	90	100	112	132	160	180	200	225	250	
A 70 3_9.4	9.4	—	—	—	—	—	—	187	185	194	—	—	150
A 70 3_10.2	10.2	—	—	—	—	—	—	183	180	190	—	—	146
A 70 3_12.1	12.1	—	—	—	—	—	—	150	148	157	—	—	113
A 70 3_13.1	13.1	—	—	—	—	—	—	147	145	154	—	—	111
A 70 3_15.4	15.4	45	—	—	—	—	64	124	121	161	—	—	87
A 70 3_16.7	16.7	44	—	—	—	—	63	122	120	129	—	—	85
A 70 3_19.7	19.7	30	—	—	—	—	49	109	107	—	—	—	72
A 70 3_21.3	21.3	29	—	—	—	—	48	108	106	—	—	—	71
A 70 3_23.5	23.5	—	—	—	—	—	—	116	114	123	—	—	79
A 70 3_27.8	27.8	—	—	—	—	—	—	118	116	125	—	—	81
A 70 3_30.1	30.1	—	—	—	—	—	—	117	115	124	—	—	81
A 70 3_35.4	35.4	26	—	—	—	—	45	104	102	111	—	—	67
A 70 3_38.4	38.4	25	—	—	—	—	44	104	101	111	—	—	67
A 70 3_45.2	45.2	18	—	—	—	—	37	97	94	—	—	—	59
A 70 3_49.0	49.0	18	—	—	—	—	37	96	94	—	—	—	59
A 70 3_53.2	53.2	15	—	—	—	—	34	93	91	—	—	—	56
A 70 3_57.7	57.7	15	—	—	—	—	34	93	91	—	—	—	56
A 70 3_66.9	66.9	9.7	12	12	13	13	29	88	86	—	—	—	51
A 70 3_72.5	72.5	9.6	12	12	13	13	28	88	86	—	—	—	51
A 70 3_79.3	79.3	6.8	9.4	9.3	11	11	26	85	83	—	—	—	48
A 70 3_85.9	85.9	6.7	9.3	9.3	11	11	26	85	83	—	—	—	48
A 70 3_96.2	96.2	5.4	8.2	8.2	9.4	9.4	24	84	82	—	—	—	47
A 70 3_104.2	104.2	5.4	8.2	8.1	9.4	9.4	24	84	81	—	—	—	47
A 70 3_120.6	120.6	3.4	6.2	6.2	7.5	7.5	22	82	79	—	—	—	45
A 70 3_130.7	130.7	3.4	6.2	6.2	7.4	7.4	22	82	79	—	—	—	45
A 70 3_141.9	141.9	2.4	5.3	5.2	6.5	6.5	21	81	78	—	—	—	44
A 70 3_153.7	153.7	2.4	5.2	5.2	6.5	6.5	21	81	78	—	—	—	44

For the values of the moment of inertia of 4-stage gearboxes, please contact our Technical Service department.

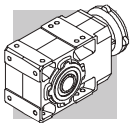

A 80

	i	J (•10-4) [kgm2]											
			IEC										
			80	90	100	112	132	160	180	200	225	250	
A 80 3_9.8	9.8	—	—	—	—	—	—	—	320	333	611	—	286
A 80 3_10.7	10.7	—	—	—	—	—	—	—	309	323	601	—	276
A 80 3_12.3	12.3	—	—	—	—	—	—	239	239	253	531	—	205
A 80 3_13.3	13.3	—	—	—	—	—	—	232	233	246	524	—	199
A 80 3_15.5	15.5	—	—	—	—	—	—	187	185	194	478	—	150
A 80 3_16.7	16.7	—	—	—	—	—	—	183	180	190	474	—	150
A 80 3_19.3	19.3	69	—	—	—	—	88	147	145	154	440	—	111
A 80 3_20.9	20.9	66	—	—	—	—	85	145	142	152	437	—	108
A 80 3_22.6	22.6	—	—	—	—	—	—	—	205	219	496	—	171
A 80 3_24.5	24.5	—	—	—	—	—	—	—	203	217	494	—	169
A 80 3_28.2	28.2	—	—	—	—	—	—	165	166	179	457	—	132
A 80 3_30.6	30.6	—	—	—	—	—	—	164	164	178	456	—	130
A 80 3_35.5	35.5	—	—	—	—	—	—	140	138	147	432	—	104
A 80 3_38.5	38.5	—	—	—	—	—	—	140	137	147	431	—	103
A 80 3_44.5	44.5	39	—	—	—	—	58	118	115	125	410	—	81
A 80 3_48.2	48.2	39	—	—	—	—	58	117	115	124	410	—	90
A 80 3_55.2	55.2	29	—	—	—	—	48	108	105	136	399	—	70
A 80 3_59.8	59.8	29	—	—	—	—	48	107	105	136	399	—	70
A 80 3_66.8	66.8	22	—	—	—	—	41	101	98	128	391	—	63
A 80 3_72.4	72.4	22	—	—	—	—	41	100	98	128	391	—	63
A 80 3_82.3	82.3	15	17	17	18	18	34	94	91	120	384	—	56
A 80 3_89.2	89.2	15	17	17	18	18	34	93	91	120	386	—	56
A 80 3_96.0	96.0	14	16	16	17	17	32	92	90	119	382	—	55
A 80 3_104.0	104.0	13	16	16	17	17	32	92	89	119	382	—	55
A 80 3_116.0	116.0	9.1	12	12	13	13	28	87	85	—	—	—	50
A 80 3_125.6	125.6	9.1	12	12	13	13	28	87	85	—	—	—	50
A 80 3_144.7	144.7	5.4	8.3	8.2	10	10	24	84	82	—	—	—	47
A 80 3_156.8	156.8	5.4	3.0	2.9	4.2	4.2	19	78	76	—	—	—	41

For the values of the moment of inertia of 4-stage gearboxes, please contact our Technical Service department.

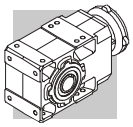

A 90

	i	J (•10-4) [kgm2]											
			IEC										
			80	90	100	112	132	160	180	200	225	250	
A 90 3_9.7	9.7	—	—	—	—	—	—	—	597	611	889	918	898
A 90 3_10.5	10.5	—	—	—	—	—	—	—	575	589	867	896	876
A 90 3_12.6	12.6	—	—	—	—	—	—	—	402	416	693	723	703
A 90 3_13.7	13.7	—	—	—	—	—	—	—	389	403	681	710	690
A 90 3_15.6	15.6	—	—	—	—	—	—	—	306	319	597	627	607
A 90 3_16.9	16.9	—	—	—	—	—	—	—	297	311	589	618	598
A 90 3_19.4	19.4	—	—	—	—	—	—	236	234	243	527	559	530
A 90 3_21.0	21.0	—	—	—	—	—	—	231	228	238	522	553	524
A 90 3_22.3	22.3	—	—	—	—	—	—	—	326	340	618	647	627
A 90 3_24.1	24.1	—	—	—	—	—	—	—	322	336	614	643	623
A 90 3_29.1	29.1	—	—	—	—	—	—	—	243	257	535	564	544
A 90 3_31.5	31.5	—	—	—	—	—	—	—	241	254	532	562	542
A 90 3_35.8	35.8	—	—	—	—	—	—	—	201	215	493	522	502
A 90 3_38.8	38.8	—	—	—	—	—	—	—	200	213	491	521	500
A 90 3_44.6	44.6	—	—	—	—	—	—	169	166	176	460	491	462
A 90 3_48.3	48.3	—	—	—	—	—	—	168	165	175	459	490	461
A 90 3_55.0	55.0	66	—	—	—	—	85	144	142	151	437	468	438
A 90 3_59.6	59.6	66	—	—	—	—	84	144	141	151	436	468	437
A 90 3_68.8	68.8	48	—	—	—	—	67	126	124	154	418	449	416
A 90 3_74.5	74.5	47	—	—	—	—	66	126	123	154	417	449	416
A 90 3_80.4	80.4	43	—	—	—	—	62	121	119	149	412	443	412
A 90 3_87.1	87.1	43	—	—	—	—	62	121	119	148	412	443	412
A 90 3_98.6	98.6	28	30	30	32	32	47	106	104	134	397	428	399
A 90 3_106.8	106.8	28	30	30	31	31	47	106	104	133	397	428	399
A 90 3_116.9	116.9	23	25	25	26	26	41	101	99	128	391	423	394
A 90 3_126.6	126.6	22	25	25	26	26	41	101	98	128	391	422	394
A 90 3_139.4	139.4	15	17	17	19	19	33	93	91	—	—	—	386
A 90 3_151.0	151.0	14	3.0	3.0	4.3	4.3	19	79	76	—	—	—	372

For the values of the moment of inertia of 4-stage gearboxes, please contact our Technical Service department.

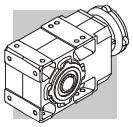

42 EXACT RATIOS

i_N	A 05	A 10	A 20	A 30	A 35	A 41	A 50	A 55	A 60	A 70	A 80	A 90
5.0								4.94505				
5.6	5.46559	5.46559	5.35117	5.41311	5.41311	5.24476						
6.3	6.33484	6.33484	6.53846	6.41026	6.41026			6.41026				
7.1	7.21154	7.21154	7.28745	7.02341	7.02341	7.12251						
8.0	8.51648	8.51648	8.37104	8.46154	8.46154	8.33333	7.73684	8.46154	7.86420			
9.0	9.61538	9.61538	9.37500	9.31174	9.31174	9.19732				9.43946		9.67545
10.0	10.55639	10.55639	10.33540	10.45503	10.63348	10.12987	9.73401	10.35503	10.31579	10.22609	9.83278	10.48174
11.2				11.77885	11.77885	11.74089				12.08027	10.65217	12.64214
12.5	12.30769	12.30769	11.96581		13.06878		13.10700	13.07692	12.70370	13.08696	12.27130	13.69565
14.0	13.92857	13.92857	14.07519	13.56522	15.47619	13.75661				15.40468	13.29391	15.57512
16.0	16.44898	16.44898	16.16807	16.34286	16.95652	16.09524	16.57005	15.68047	16.73663	16.68841	15.45151	16.87304
18.0	18.57143	18.57143	18.10714	17.98496		17.76398					19.33779	19.38462
20.0	21.35714	21.35714	21.22449	20.53782	20.42857		20.91813	19.23077	20.5942	19.66555	20.94928	21.00000
22.4	23.77143	23.77143	23.11111	22.75000	22.48120	22.67669				21.30435	22.61538	22.25354
25.0	25.46939	25.46939	26.46429	26.53061	25.67227		24.04795	23.79021	25.71012	23.52000	24.50000	24.10800
28.0	28.57143	28.57143	29.21905	29.30159	28.43750	28.32143	26.43733		27.85263	27.78462	28.22400	29.07692
31.5	32.19048	32.19048	31.30612	33.42857	33.16327		32.38095	29.93134	31.66154	30.10000	30.57600	31.50000
35.5	35.11688	35.11688	35.42857	36.64762	36.62698	35.90476	35.59829		34.30000	35.43077	35.53846	35.82277
40.0	40.85714	40.85714	39.61905	39.26531	41.78571	45.06667	40.93645	40.30303	41.71282	38.38333	38.50000	38.80800
45.0	45.39683	45.39683	43.22078	43.42857	45.80952	48.28571	45.00386		45.18889	45.23077	44.47692	44.58462
50.0	51.25714	51.25714	48.28571	48.28571	49.08163	53.14286	51.67843	50.95166	51.32709	49.00000	48.18333	48.30000
56.0	58.60317	58.60317	53.65079	52.67532	54.28571	58.80952	56.81314		55.60435	53.23314	55.18154	55.03077
63.0	65.92857	65.92857	63.14286	59.42857	60.35714	64.15584	63.89011	64.32168	64.98947	66.94154	66.80237	59.61667
71.0			70.98413	66.03175	65.84416	71.31429	70.23817		70.40526	72.52000	72.36923	68.75077
80.0	76.40816	76.40816	79.85714	76.51429	74.28571	79.23810	81.45055	79.52098	79.71923	79.32781	82.32000	80.37160
90.0	91.61905	91.61905	92.32653	86.66667	82.53968	92.76828	89.54339		86.36250	85.93846	89.18000	87.06923
100.0				97.50000	95.64286		99.53407	101.37762	99.50769	96.21818	104.03077	98.60308
112.2			109.16518	109.07029	105.54155	115.86039	109.42367	123.88531	107.80000	104.23636	115.95524	116.90414
125.0			120.52857	120.46208	116.90972		129.67046	132.73427	123.02769	120.61538	125.61818	126.64615
140.0			146.14286	137.42857	136.33787	146.88312	140.61938	146.80796	144.04260	141.86014	144.73846	139.39301
160.0			163.42857	161.42404	150.57760		154.59118	160.43706	171.46573	169.75499	156.80000	166.12694
180.0			178.28571	178.53968	171.78571	184.36364	173.36264	175.02225	185.75455	183.90123	171.29752	179.97085
200.0			199.17857	198.50794	201.78005	197.53247	190.58777	194.19860	208.73017		214.73193	209.01044
225.0			221.30952	216.55411	223.17460	217.40260	231.98700	208.05260	226.12435	220.25418	232.62626	226.42797
250.0			260.46429	244.31746	248.13492	240.58442	260.88462		264.29053	238.60870		
280.0			292.80952	271.46384	270.69264	291.74026	286.80584	262.64685	286.31474	292.01619	277.28428	281.43590
315.0			329.41071	314.55873	305.39683	324.15584	332.58974		324.19154	316.35088	300.39130	304.88889
355.0				356.29630	339.32981	376.83117	365.63552	324.71066	351.20750	369.38462	353.96864	355.79521
400.0			380.84694	400.83333	393.19841		406.43077		404.66462	400.16667	383.46603	385.44482
450.0							446.81331	413.95862	438.38667	475.76068	442.07937	449.15802
500.0							481.63314	505.86503	500.31262	515.40741	478.91932	486.58785
560.0							574.19580	541.99825	585.77325	595.03590	560.45035	555.29467
630.0							631.24731	655.11801	634.58769	644.62222	607.15455	601.56923
710.0							707.89744	714.67419	697.29399	705.13609	703.46182	707.91953
800.0							778.23340	792.97762	755.40182	855.27273	829.52598	766.91282
900.0										926.54545	898.65315	865.09065
1000.0										1072.13675	1001.43166	1025.1594
1125.0										1161.48148	1084.88430	1110.58935
1250.0										1242.33846	1236.85594	1222.17967
1400.0										1345.86667	1339.92727	1324.02797
1600.0										1583.07692	1557.66545	1506.76450
1800.0										1715.00000		1632.32821

2x 3x 4x

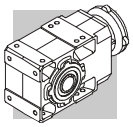

43 DIMENSIONS

A 05...M

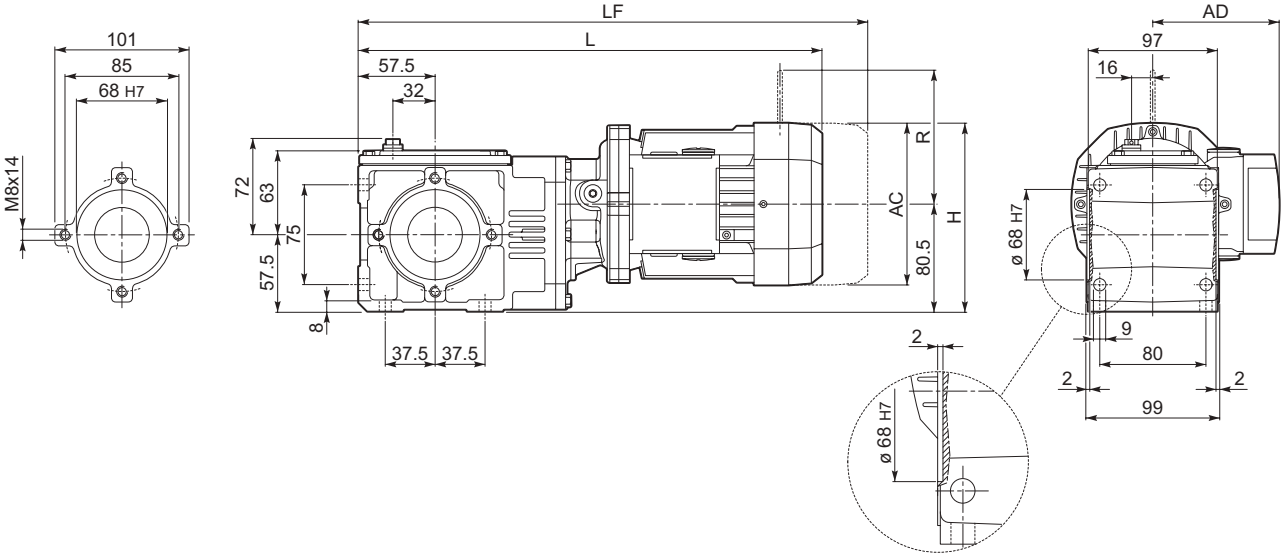

								M...FD M...FA		M...FD		M...FA	
			AC	H	L	AD		LF		R	AD	R	AD
A 05 2	**S05**	**M05**	121	141	360.5	95	7.5	426.5	9	96	122	116	95
A 05 2	**S1**	**M1**	138	149.5	389.5	108	11.5	450.5	14	103	135	124	108
A 05 2	**S2**	**M2S**	156	158.5	418.5	119	15.5	488.5	19	129	146	134	119

A 05...P(IEC)

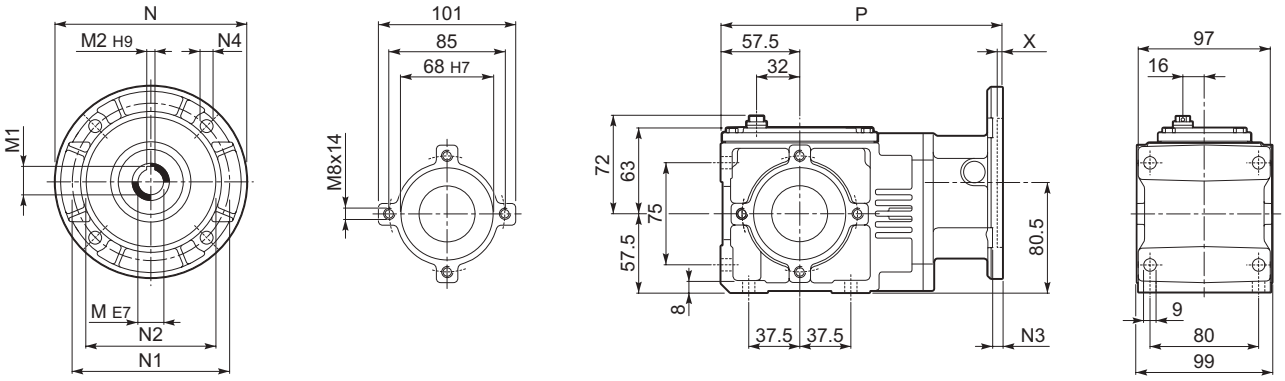

		M	M1	M2	N	N1	N2	N3	N4	X	P	
A 05 2	**P63**	11	12.8	4	140	115	95	7	9.5	3.5	206	5
A 05 2	**P71**	14	16.3	5	160	130	110	7	9.5	4	213	5
A 05 2	**P80**	19	20.8	6	200	165	130	7	11.5	4	223	5.5

Lowered key of Bonfiglioli supply

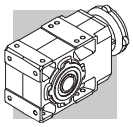

A 05...SK / SC

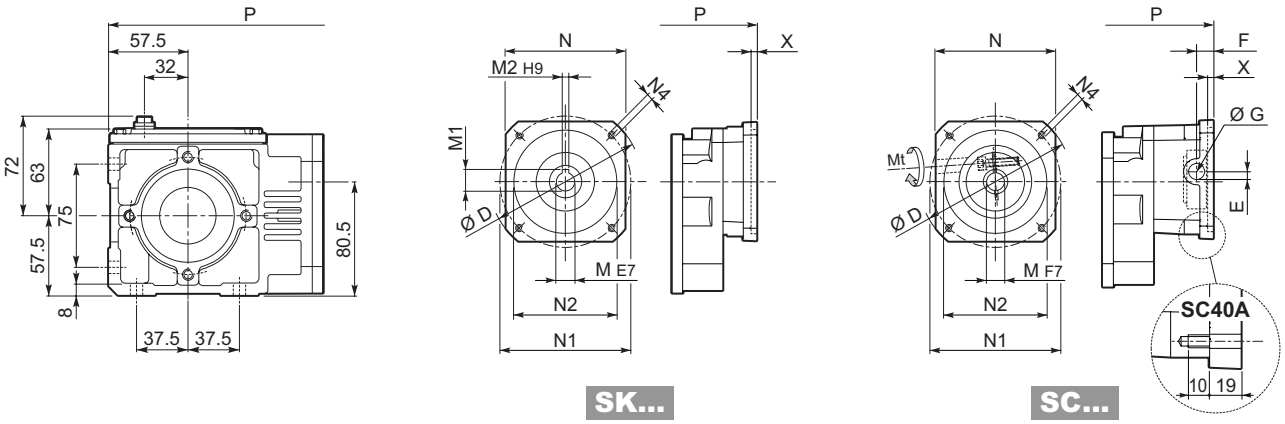

		D	M	M1	M2	N	N1	N2	N4	X	P	
A 05 2	**SK40A**	74	9	10.4	3	55	63	40	M5x10	3	207.5	5
A 05 2	**SK60A**	102	11	12.8	4	82	75	60	M5x10	3.5	206	5
A 05 2	**SK60B**	102	14	16.3	5	82	75	60	M5x10	4	213	5
A 05 2	**SK80A**	115	14	16.3	5	90	100	80	M6x12	4	213	5

			Mt [Nm]	D	E	F	G	M	N	N1	N2	N4	X	P	
A 05 2	**SC40A**	M5	15	74	10.5	9.5	12.5	9	55	63	40	M5x10	3	226.5	6
A 05 2	**SC60A**	M6	15	102	7	12.5	12.5	11	82	75	60	M5x10	4	233	6
A 05 2	**SC60B**	M6	15	102	7	12.5	12.5	14	82	75	60	M5x10	4	233	6
A 05 2	**SC80A**	M6	15	115	6	12.5	12.5	14	90	100	80	M6x12	4	233	6

A 05...F...

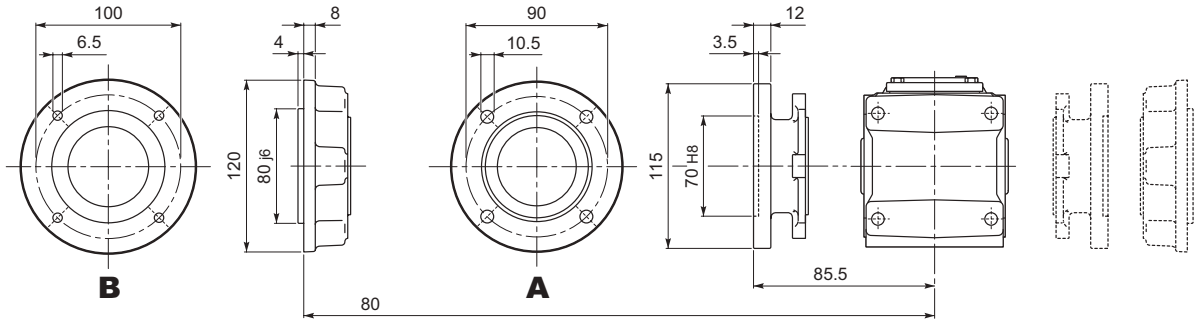

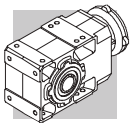

A 05

A 05...UR

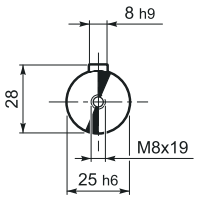

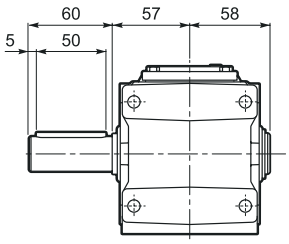

A 05...UD

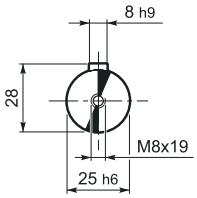

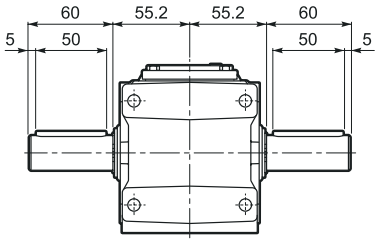

A 05...UH

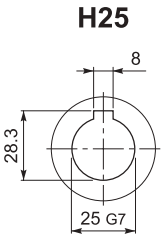

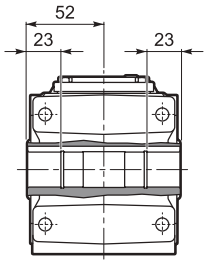

A 05...US

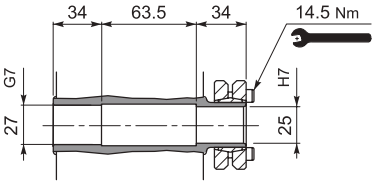

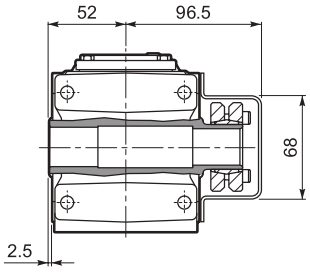

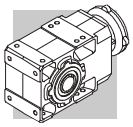

A 10...M

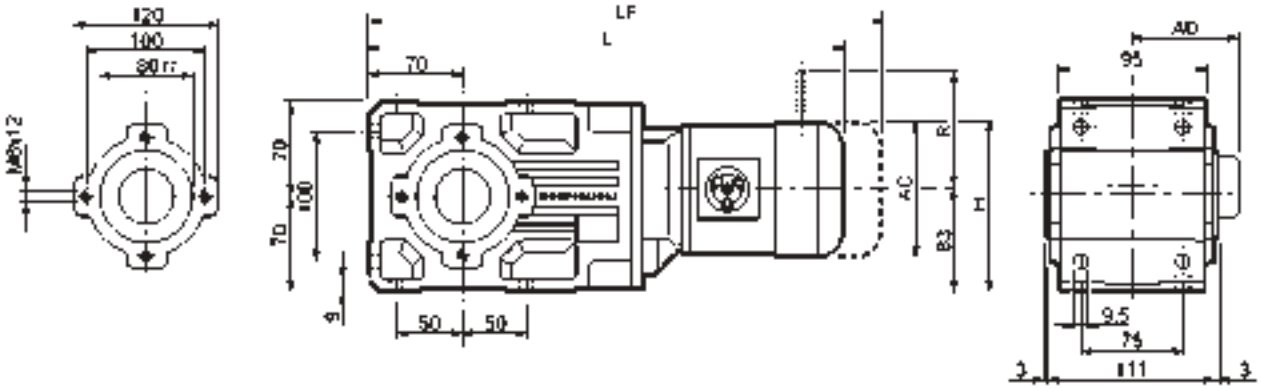

								M...FD M...FA		M...FD		M...FA	
			AC	H	L	AD		LF		R	AD	R	AD
A 10 2	**S05**	**M05**	121	143.5	408.5	95	12	474.5	14	96	122	116	95
A 10 2	**S1**	**M1**	138	152	437.5	108	14	498.5	17	103	135	124	108
A 10 2	**S2**	**M2S**	156	161	466.5	119	18	536.5	22	129	146	134	119
A 10 2	**S3**	**M3S**	195	180.5	509.5	142	23	605.5	30	160	158	160	142
A 10 2	**S3**	**M3L**	195	180.5	541.5	142	30	632.5	37	160	158	160	142

Bonfiglioli Riduttori

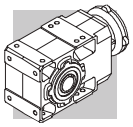

A 10...P(IEC)

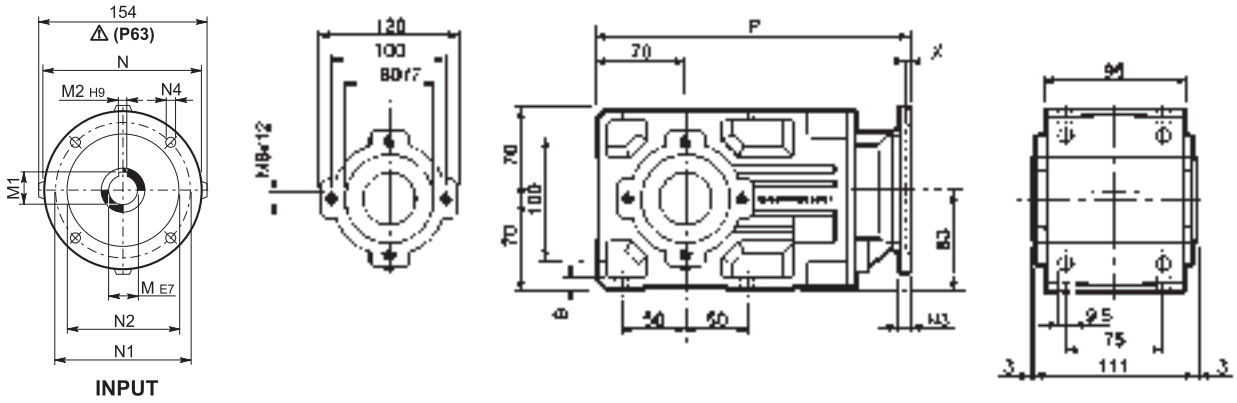

		M	M1	M2	N	N1	N2	N3	N4	X	P	
A 10 2	**P63**	11	12.8	4	140	115	95	—	M8x10	4	282.5	8
A 10 2	**P71**	14	16.3	5	160	130	110	—	M8x10	4.5	282.5	9
A 10 2	**P80**	19	21.8	6	200	165	130	—	M10x14.5	4	302	9
A 10 2	**P90**	24	27.3	8	200	165	130	—	M10x14.5	4	302	9
A 10 2	**P100**	28	31.3	8	250	215	180	—	M12x16	4.5	312	13
A 10 2	**P112**	28	31.3	8	250	215	180	—	M12x16	4.5	312	13

A 10...HS

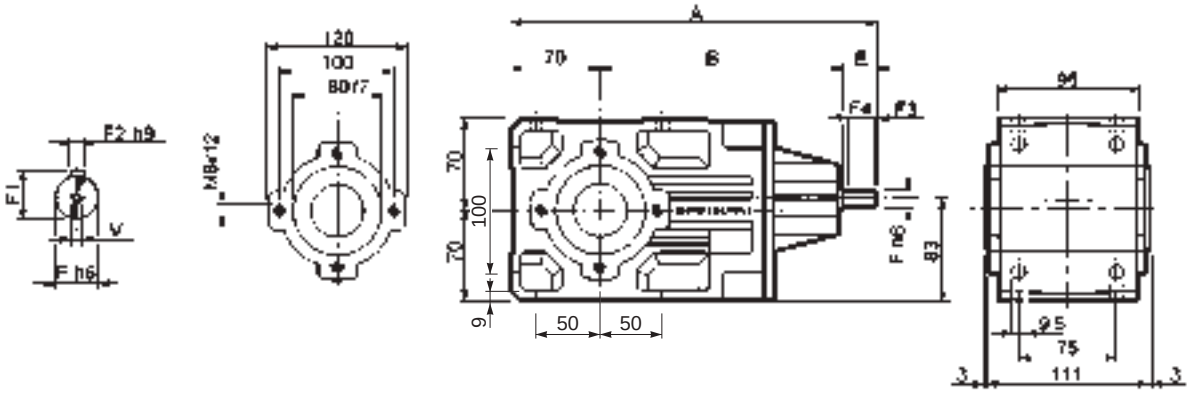

		A	B	E	F	F1	F2	F3	F4	V	
A 10 2	**HS**	289.5	179.5	40	16	18	5	2.5	35	M6x16	7.8

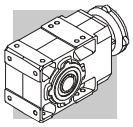

A 10...SK / SC

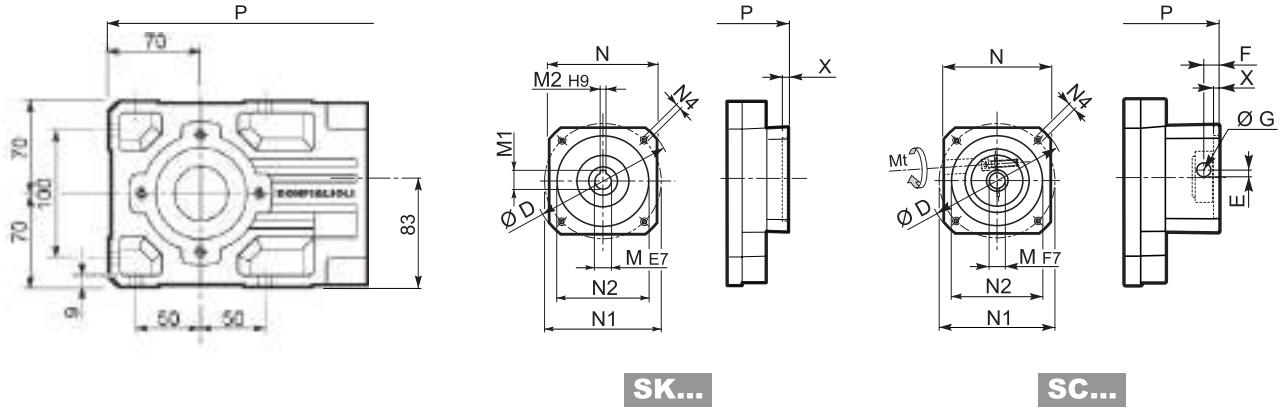

		D	M	M1	M2	N	N1	N2	N4	X	P	
A 10 2	**SK60A**	102	11	12.8	4	82	75	60	M5x10	3.5	254	8
A 10 2	**SK60B**	102	14	16.3	5	82	75	60	M5x10	4	261	8
A 10 2	**SK80A**	115	14	16.3	5	90	100	80	M6x12	4	261	8
A 10 2	**SK80C**	120	19	21.8	6	96	100	80	M6x12	4	302	9
A 10 2	**SK95A**	130	14	16.3	5	102	115	95	M8x12	4	302	9
A 10 2	**SK95B**	130	19	21.8	6	102	115	95	M8x12	4	302	9
A 10 2	**SK95C**	130	24	27.3	8	102	115	95	M8x12	4	302	9
A 10 2	**SK110A**	150	19	21.8	6	120	130	110	M8x12	5	302	9
A 10 2	**SK110B**	150	24	27.3	8	120	130	110	M8x12	5	302	9

			Mt [Nm]	D	E	F	G	M	N	N1	N2	N4	X	P	
A 10 2	**SC60A**	M6	15	102	7	12.5	12.5	11	82	75	60	M5x10	4	281	9
A 10 2	**SC60B**	M6	15	102	7	12.5	12.5	14	82	75	60	M5x10	4	281	9
A 10 2	**SC80A**	M6	15	115	6	12.5	12.5	14	90	100	80	M6x12	4	281	9
A 10 2	**SC80C**	M6	15	120	15.5	14.5	17.75	19	96	100	80	M6x12	4	325.5	10
A 10 2	**SC95A**	M6	15	130	16.5	15	17.75	14	102	115	95	M8x16	4	325.5	10
A 10 2	**SC95B**	M6	15	130	16.5	15	17.75	19	102	115	95	M8x16	4	325.5	10
A 10 2	**SC95C**	M6	15	130	16.5	15	17.75	24	102	115	95	M8x16	4	325.5	10
A 10 2	**SC110A**	M6	15	150	16.5	16	17.75	19	120	130	110	M8x16	5	325.5	12
A 10 2	**SC110B**	M6	15	150	16.5	16	17.75	24	120	130	110	M8x16	5	325.5	12

A 10...F...

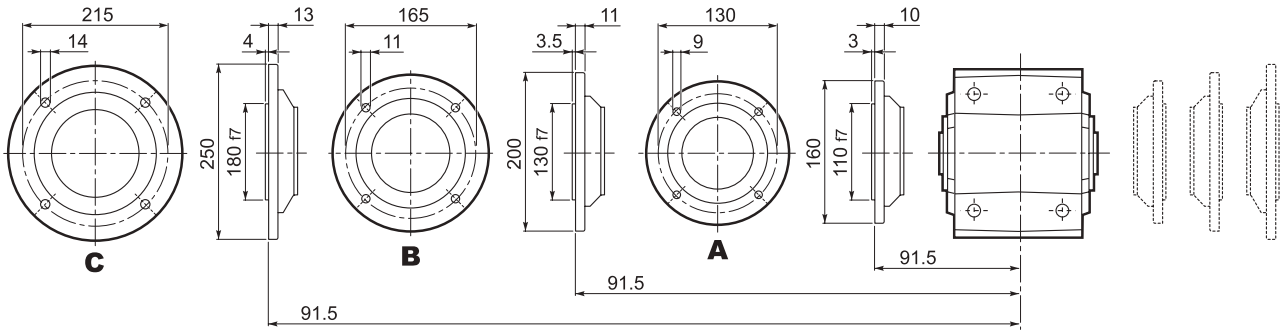

Bonfiglioli Riduttori

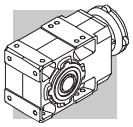

A 10

A 10...UR

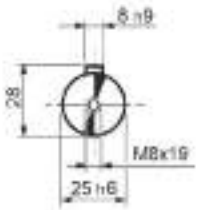

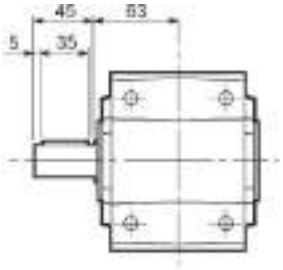

A 10...UD

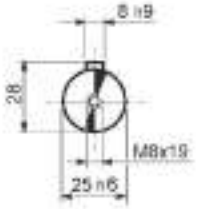

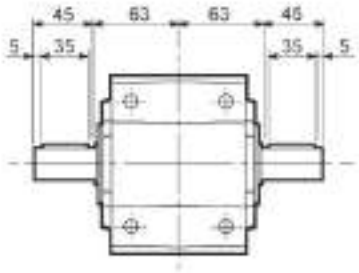

A 10...UH

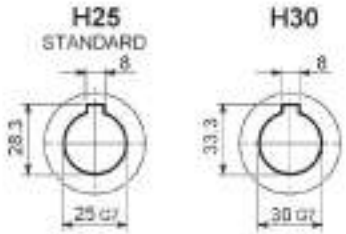

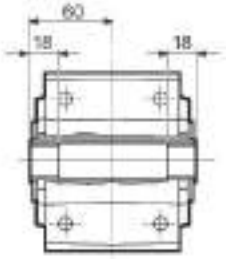

A 10...US

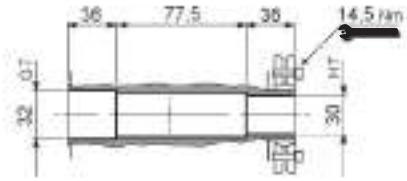

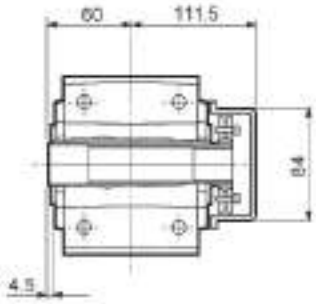

A10...QF

	Ø
QF25	25
QF30	30

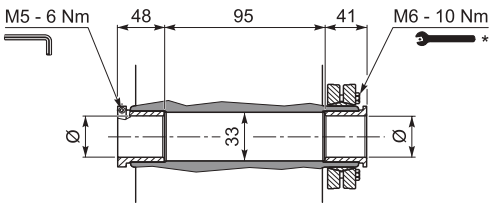

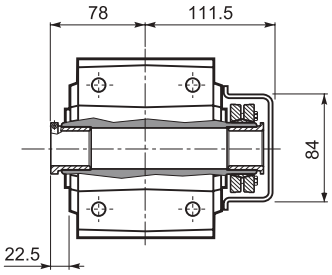

* Follow the MOUNTING INSTRUCTIONS supplied with the gearbox.supplied with the gearbox.

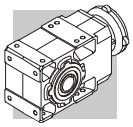

A 20...M

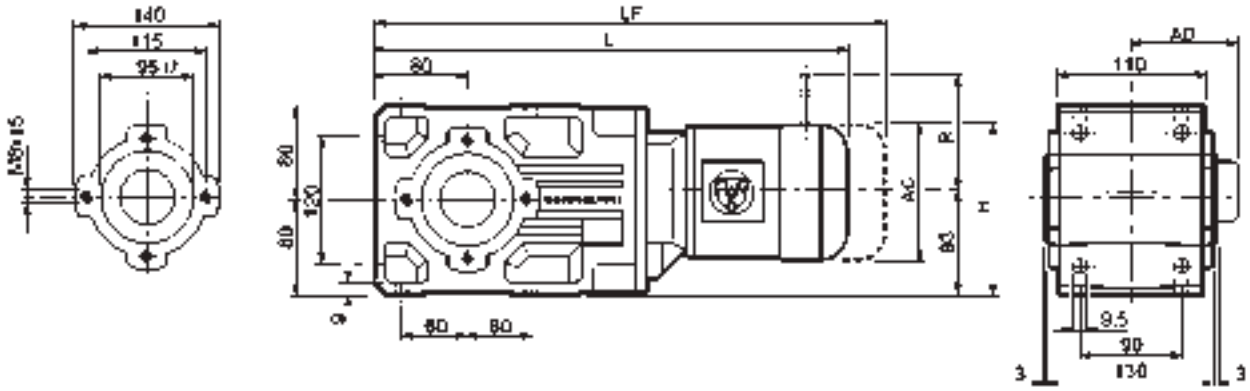

								M...FD M...FA		M...FD		M...FA	
			AC	H	L	AD		LF		R	AD	R	AD
A 20 2	**S05**	**M05**	121	143.5	432	95	16	498	18	96	122	116	95
A 20 2	**S1**	**M1**	138	152	461	108	18	522	21	103	135	124	108
A 20 2	**S2**	**M2S**	156	161	490	119	22	560	26	129	146	134	119
A 20 2	**S3**	**M3S**	195	180.5	533	142	27	629	34	160	158	160	142
A 20 2	**S3**	**M3L**	195	180.5	565	142	34	656	41	160	158	160	142
A 20 3	**S05**	**M05**	121	143.5	457.5	95	16	553.5	18	96	122	116	95
A 20 3	**S1**	**M1**	138	152	486.5	108	19	577.5	21	103	135	124	108
A 20 3	**S2**	**M2S**	156	161	545.5	119	23	615.5	27	129	146	134	119
A 20 3	**S3**	**M3S**	195	180.5	588.5	142	28	684.5	35	160	158	160	142
A 20 3	**S3**	**M3L**	195	180.5	620.5	142	35	711.5	42	160	158	160	142

Bonfiglioli Riduttori

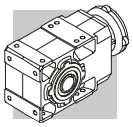

A 20...P(IEC)

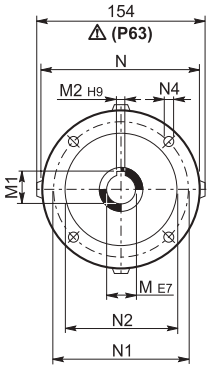

INPUT

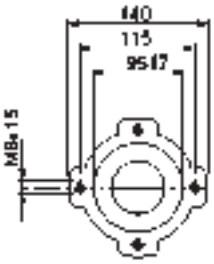

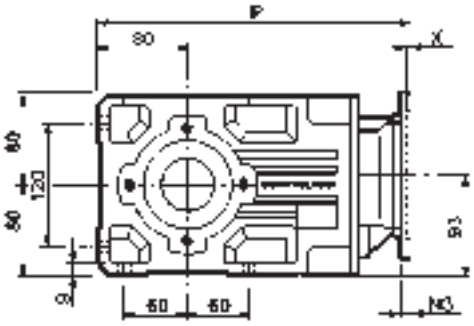

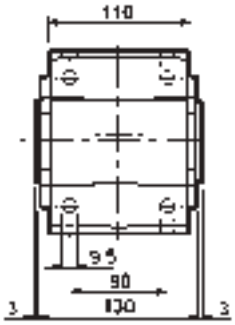

		M	M1	M2	N	N1	N2	N3	N4	X	P	
A 20 2	**P63**	11	12.8	4	140	115	95	—	M8x19	4	306	12
A 20 2	**P71**	14	16.3	5	160	130	110	—	M8x16	4.5	306	12
A 20 2	**P80**	19	21.8	6	200	165	130	—	M10x14.5	4	325.5	13
A 20 2	**P90**	24	27.3	8	200	165	130	—	M10x14.5	4	325.5	13
A 20 2	**P100**	28	31.3	8	250	215	180	—	M12x16	4.5	335.5	17
A 20 2	**P112**	28	31.3	8	250	215	180	—	M12x16	4.5	335.5	17
A 20 3	**P63**	11	12.8	4	140	115	95	—	M8x19	4	361.5	13
A 20 3	**P71**	14	16.3	5	160	130	110	—	M8x16	4.5	361.5	13
A 20 3	**P80**	19	21.8	6	200	165	130	—	M10x14.5	4	381	14
A 20 3	**P90**	24	27.3	8	200	165	130	—	M10x14.5	4	381	14
A 20 3	**P100**	28	31.3	8	250	215	180	—	M12x16	4.5	391	18
A 20 3	**P112**	28	31.3	8	250	215	180	—	M12x16	4.5	391	18

A 20...HS

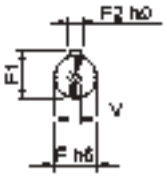

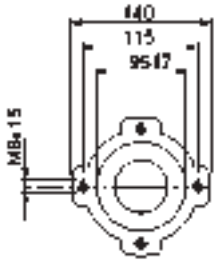

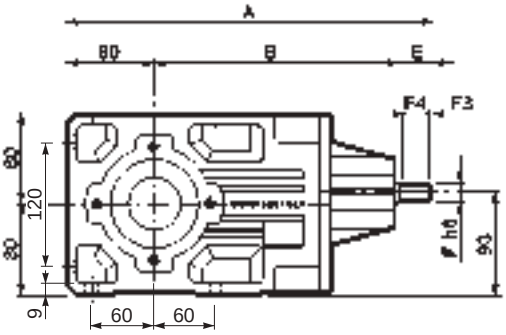

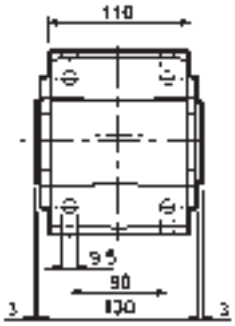

		A	B	E	F	F1	F2	F3	F4	V	
A 20 2	**HS**	356	236	40	19	21.5	6	2.5	35	M6x16	11.9
A 20 3		368.5	248.5	40	16	18	5	2.5	35	M6x16	12.2

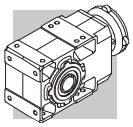

A 20...SK / SC

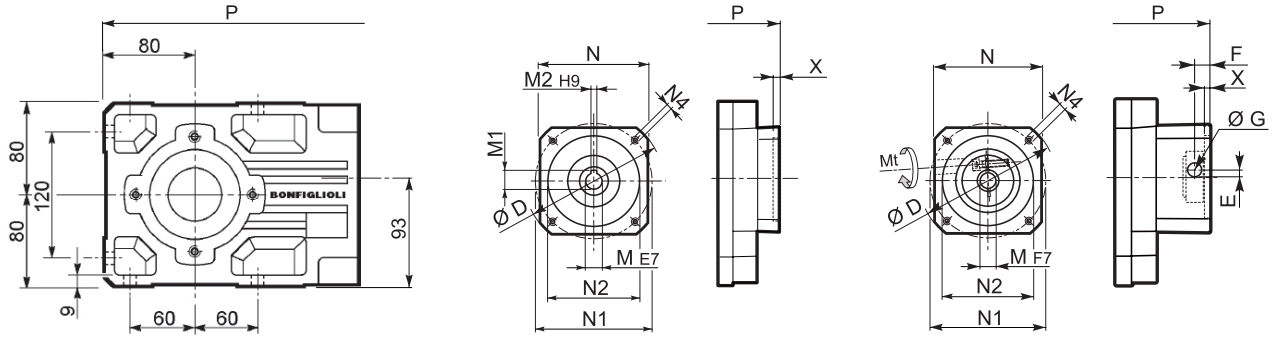

SK...

SC...

		D	M	M1	M2	N	N1	N2	N4	X	P 2x	P 3x	
A 20 2/3	SK60A	102	11	12.8	4	82	75	60	M5x10	3.5	277.5	333	11/12
A 20 2/3	SK60B	102	14	16.3	5	82	75	60	M5x10	4	284.5	340	12/13
A 20 2/3	SK80A	115	14	16.3	5	90	100	80	M6x12	4	284.5	340	12/13
A 20 2/3	SK80C	120	19	21.8	6	96	100	80	M6x12	4	325.5	381	13/14
A 20 2/3	SK95A	130	14	16.3	5	102	115	95	M8x12	4	325.5	381	13/14
A 20 2/3	SK95B	130	19	21.8	6	102	115	95	M8x12	4	325.5	381	13/14
A 20 2/3	SK95C	130	24	27.3	8	102	115	95	M8x12	4	325.5	381	13/14
A 20 2/3	SK110A	150	19	21.8	6	120	130	110	M8x12	5	325.5	381	13/14
A 20 2/3	SK110B	150	24	27.3	8	120	130	110	M8x12	5	325.5	381	13/14

			Mt [Nm]	D	E	F	G	M	N	N1	N2	N4	X	P 2x	P 3x	
A 20 2/3	SC60A	M6	15	102	7	12.5	12.5	11	82	75	60	M5x10	4	304.5	360	12/13
A 20 2/3	SC60B	M6	15	102	7	12.5	12.5	14	82	75	60	M5x10	4	304.5	360	13/14
A 20 2/3	SC80A	M6	15	115	6	12.5	12.5	14	90	100	80	M6x12	4	304.5	360	13/14
A 20 2/3	SC80C	M6	15	120	15.5	14.5	17.75	19	96	100	80	M6x12	4	349	404.5	14/15
A 20 2/3	SC95A	M6	15	130	16.5	15	17.75	14	102	115	95	M8x16	4	349	404.5	14/15
A 20 2/3	SC95B	M6	15	130	16.5	15	17.75	19	102	115	95	M8x16	4	349	404.5	14/15
A 20 2/3	SC95C	M6	15	130	16.5	15	17.75	24	102	115	95	M8x16	4	349	404.5	14/15
A 20 2/3	SC110A	M6	15	150	16.5	16	17.75	19	120	130	110	M8x16	5	349	404.5	15/16
A 20 2/3	SC110B	M6	15	150	16.5	16	17.75	24	120	130	110	M8x16	5	349	404.5	15/16

A 20...F...

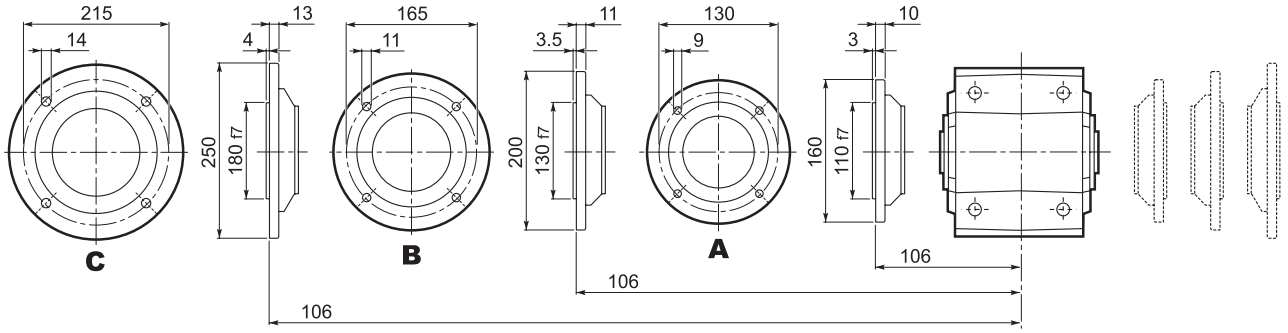

Bonfiglioli Riduttori

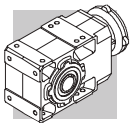

A 20

A 20...UR

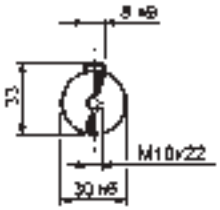

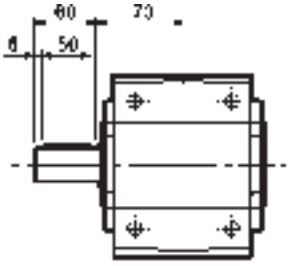

A 20...UD

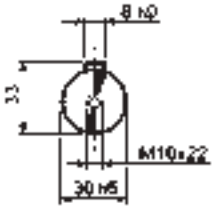

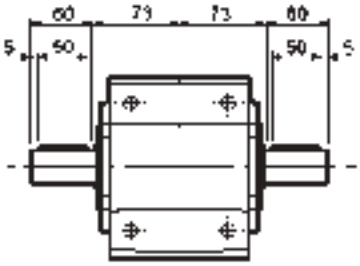

A 20...UH

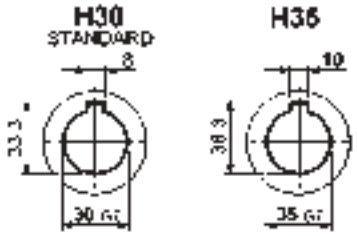

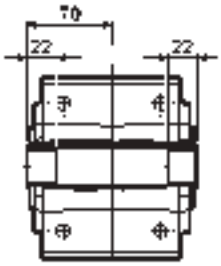

A 20...US

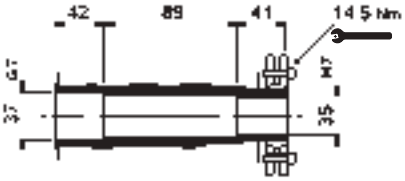

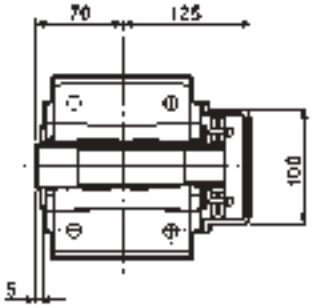

A 20...QF

	Ø
QF25	25
QF30	30

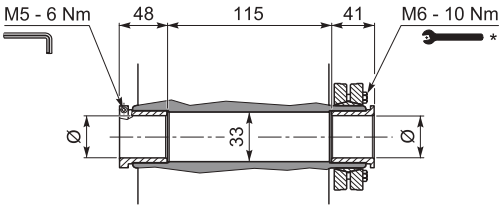

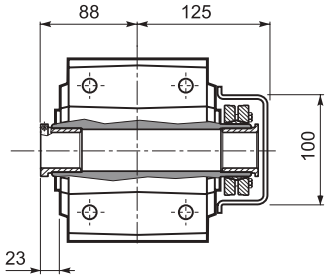

A 20...UV

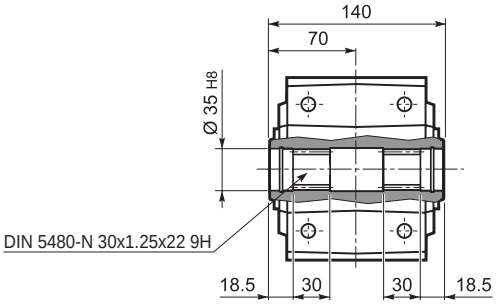

* Follow the MOUNTING INSTRUCTIONS supplied with the gearbox.

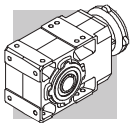

A 30...M

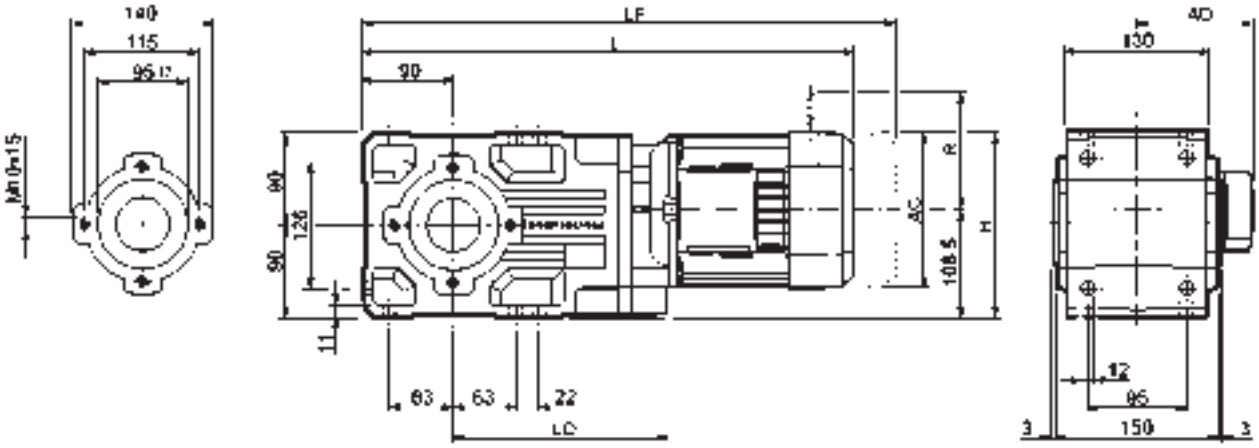

									M...FD M...FA		M...FD		M...FA	
			AC	H	L	LD	AD		LF		R	AD	R	AD
A 30 2	**S1**	**M1**	138	177.5	488	201	108	22	549	24	103	135	124	108
A 30 2	**S2**	**M2S**	156	186.5	517	213	119	25	587	29	129	146	134	119
A 30 2	**S3**	**M3S**	195	206	560	223	142	30	656	38	160	158	160	142
A 30 2	**S3**	**M3L**	195	206	592	223	142	38	683	45	160	158	160	142
A 30 3	**S05**	**M05**	121	169	516.5	—	95	21	582.5	22	96	122	116	95
A 30 3	**S1**	**M1**	138	177.5	545.5	—	108	23	606.5	26	103	135	124	108
A 30 3	**S2**	**M2S**	156	186.5	574.5	—	119	25	644.5	29	129	146	134	119
A 30 3	**S3**	**M3S**	195	206	617.5	—	142	30	713.5	38	160	158	160	142
A 30 3	**S3**	**M3L**	195	206	649.5	—	142	38	740.5	45	160	158	160	142

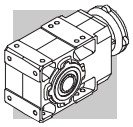

A 30...P(IEC)

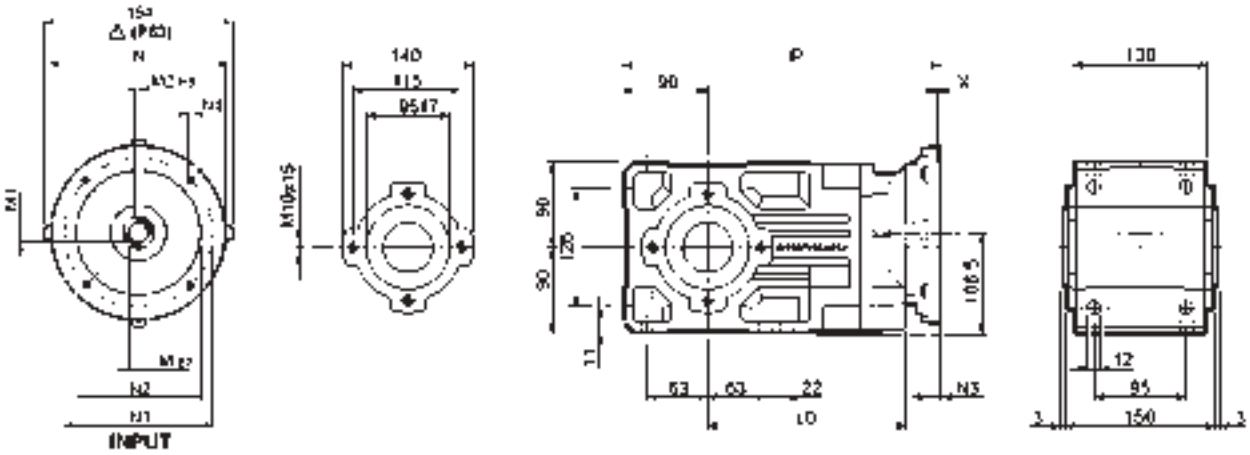

		LD	M	M1	M2	N	N1	N2	N3	N4	X	P	
A 30 2	**P63**	213	11	12.8	4	140	115	95	—	M8x19	4	333	16
A 30 2	**P71**	213	14	16.3	5	160	130	110	—	M8x16	4.5	333	16
A 30 2	**P80**	223	19	21.8	6	200	165	130	—	M10x14.5	4	352.5	17
A 30 2	**P90**	223	24	27.3	8	200	165	130	—	M10x14.5	4	352.5	17
A 30 2	**P100**	223	28	31.3	8	250	215	180	—	M12x16	4.5	362.5	20
A 30 2	**P112**	223	28	31.3	8	250	215	180	—	M12x16	4.5	362.5	20
A 30 3	**P63**	—	11	12.8	4	140	115	95	—	M8x19	4	390.5	17
A 30 3	**P71**	—	14	16.3	5	160	130	110	—	M8x16	4.5	390.5	17
A 30 3	**P80**	—	19	21.8	6	200	165	130	—	M10x14.5	4	410	18
A 30 3	**P90**	—	24	27.3	8	200	165	130	—	M10x14.5	4	410	18
A 30 3	**P100**	—	28	31.3	8	250	215	180	—	M12x16	4.5	420	22
A 30 3	**P112**	—	28	31.3	8	250	215	180	—	M12x16	4.5	420	22

A 30...HS

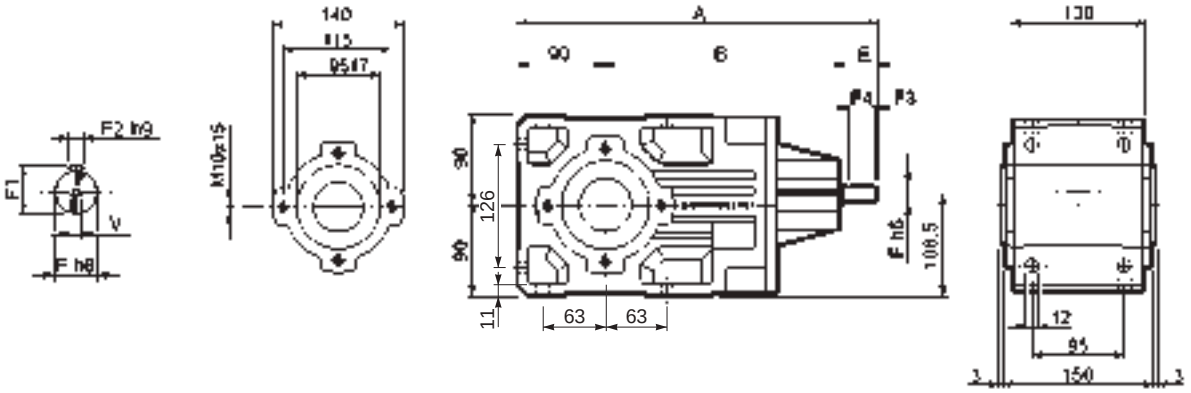

		A	B	E	F	F1	F2	F3	F4	V	
A 30 2	**HS**	383	253	40	19	21.5	6	2.5	35	M6x16	16.7
A 30 3		397.5	267.5	40	16	18	5	2.5	35	M6x16	16.5

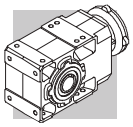

A 30...SK / SC

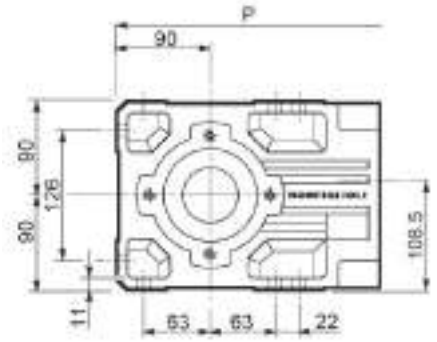

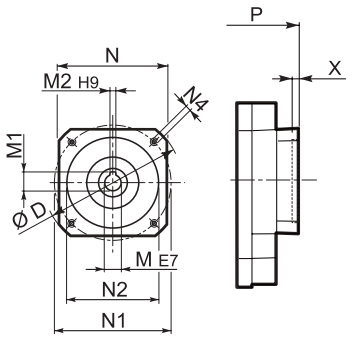

SK...

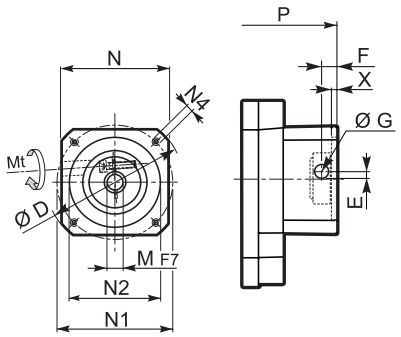

SC...

		D	M	M1	M2	N	N1	N2	N4	X	P 2x	P 3x	
A 30 2/3	SK60A	102	11	12.8	4	82	75	60	M5x10	3.5	304.5	362	15/16
A 30 2/3	SK60B	102	14	16.3	5	82	75	60	M5x10	4	311.5	369	16/17
A 30 2/3	SK80A	115	14	16.3	5	90	100	80	M6x12	4	311.5	369	16/17
A 30 2/3	SK80C	120	19	21.8	6	96	100	80	M6x12	4	352.5	410	17/18
A 30 2/3	SK95A	130	14	16.3	5	102	115	95	M8x12	4	352.5	410	17/18
A 30 2/3	SK95B	130	19	21.8	6	102	115	95	M8x12	4	352.5	410	17/18
A 30 2/3	SK95C	130	24	27.3	8	102	115	95	M8x12	4	352.5	410	17/18
A 30 2/3	SK110A	150	19	21.8	6	120	130	110	M8x12	5	352.5	410	17/18
A 30 2/3	SK110B	150	24	27.3	8	120	130	110	M8x12	5	352.5	410	17/18
A 30 2	SK130A	188	24	27.3	8	142	165	130	M10x20	5	352.5	—	18

		Mt [Nm]	D	E	F	G	M	N	N1	N2	N4	X	P 2x	P 3x	
A 30 2/3	SC60A	M6 15	102	7	12.5	12.5	11	82	75	60	M5x10	4	331.5	389	16/17
A 30 2/3	SC60B	M6 15	102	7	12.5	12.5	14	82	75	60	M5x10	4	331.5	389	17/18
A 30 2/3	SC80A	M6 15	115	6	12.5	12.5	14	90	100	80	M6x12	4	331.5	389	17/18
A 30 2/3	SC80C	M6 15	120	15.5	14.5	17.75	19	96	100	80	M6x12	4	376	433.5	18/19
A 30 2/3	SC95A	M6 15	130	16.5	15	17.75	14	102	115	95	M8x16	4	376	433.5	18/19
A 30 2/3	SC95B	M6 15	130	16.5	15	17.75	19	102	115	95	M8x16	4	376	433.5	18/19
A 30 2/3	SC95C	M6 15	130	16.5	15	17.75	24	102	115	95	M8x16	4	376	433.5	18/19
A 30 2/3	SC 110A	M6 15	150	16.5	16	17.75	19	120	130	110	M8x16	5	376	433.5	19/20
A 30 2/3	SC 110B	M6 15	150	16.5	16	17.75	24	120	130	110	M8x16	5	376	433.5	19/20
A 30 2	SC 130A	M6 15	188	19	16	17.75	24	142	165	130	M10x20	5	376	—	20

A 30...F...

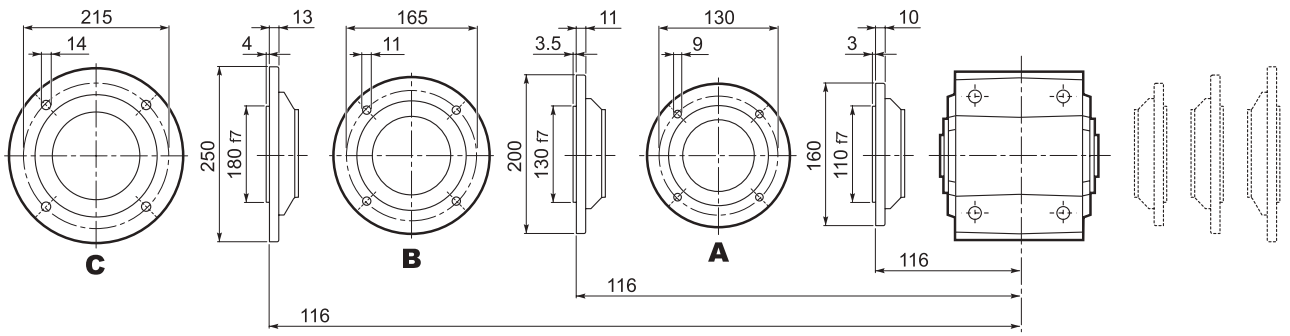

Bonfiglioli Riduttori

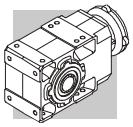

A 30

A 30...UR

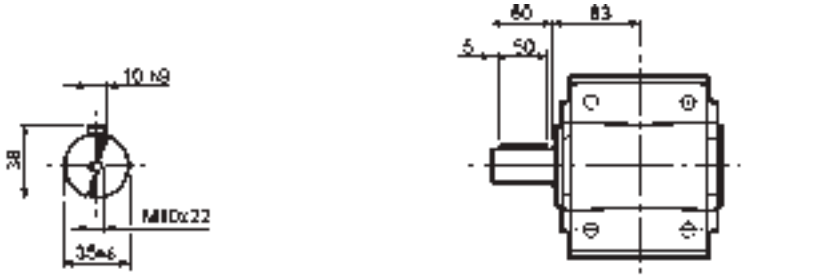

A 30...UD

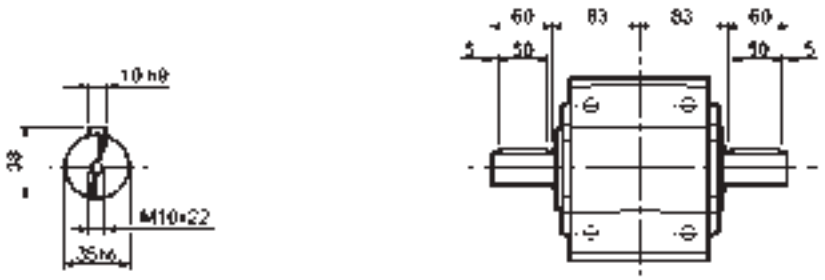

A 30...UH

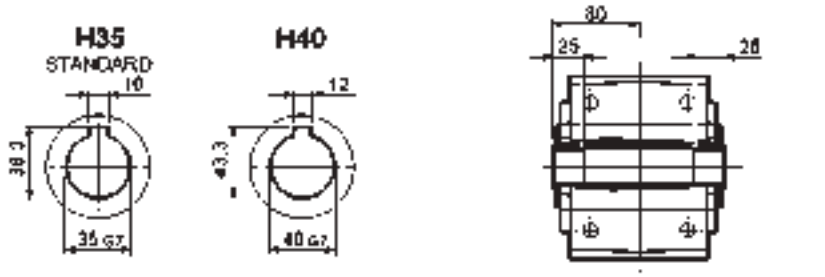

A 30...US

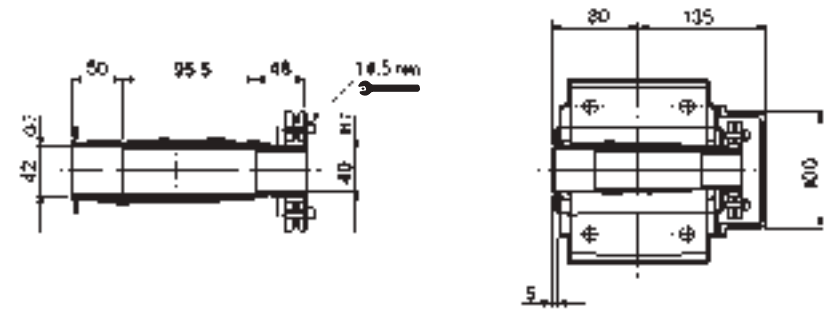

A 30...QF

	Ø
QF35	35
QF40	40

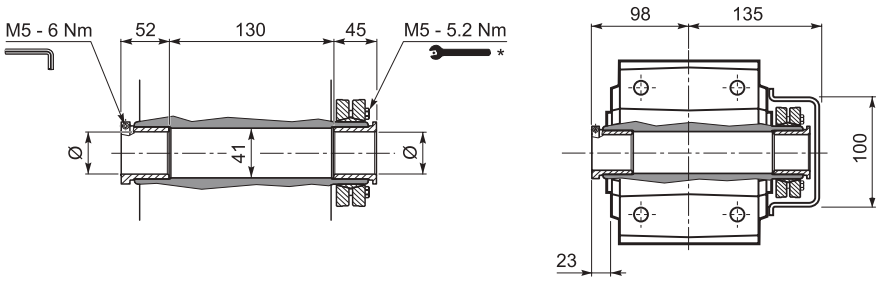

A 30...UV

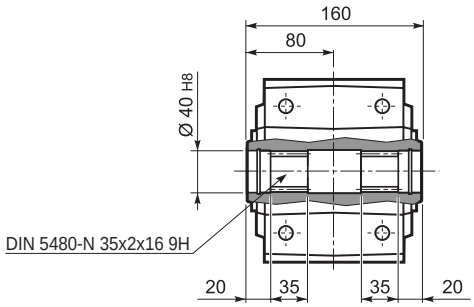

* Follow the MOUNTING INSTRUCTIONS supplied with the gearbox.

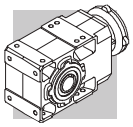

A 35...M

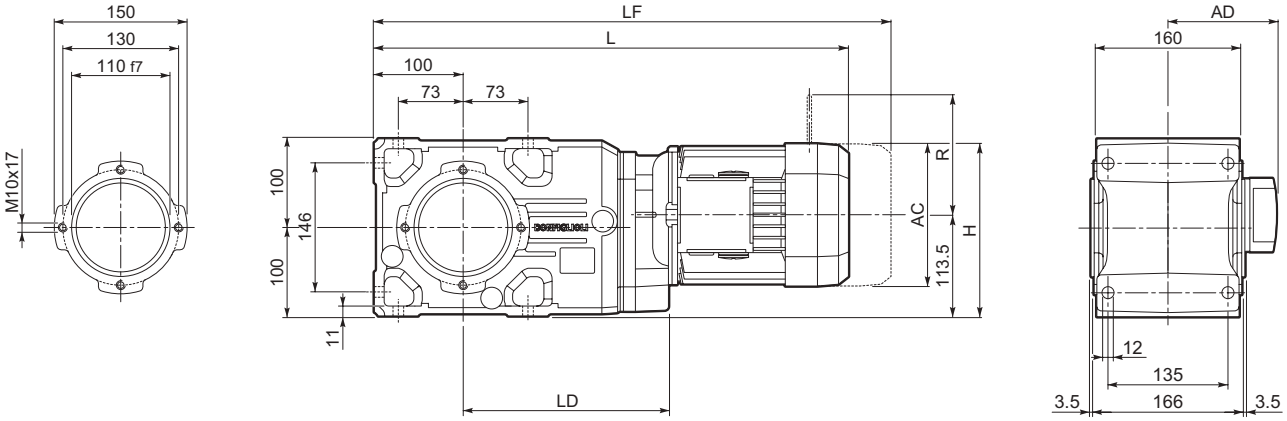

									M...FD M...FA		M...FD		M...FA	
			AC	H	L	LD	AD		LF		R	AD	R	AD
A 35 2	**S1**	**M1**	138	182.5	514.5	217.5	108	34	575.5	36	103	135	124	108
A 35 2	**S2**	**M2S**	156	191.5	543.5	229.5	119	37	613.5	41	129	146	134	119
A 35 2	**S3**	**M3S**	195	211	586.5	239.5	142	42	682.5	50	160	158	160	142
A 35 2	**S3**	**M3L**	195	211	618.5	239.5	142	50	709.5	57	160	158	160	142
A 35 2	**S4**	**M4S**	258	242.5	726.5	—	193	89	835.5	107	226	210	217	193
A 35 2	**S4**	**M4L**	258	242.5	761.5	—	193	97	860.5	115	226	210	217	193
A 35 3	**S05**	**M05S**	121	174	543	—	95	33	609	34	96	122	116	95
A 35 3	**S1**	**M1**	138	182.5	572	—	108	35	633	38	103	135	124	108
A 35 3	**S2**	**M2S**	156	191.5	601	—	119	37	671	41	129	146	134	119
A 35 3	**S3**	**M3S**	195	211	644	—	142	42	740	50	160	158	160	142
A 35 3	**S3**	**M3L**	195	211	676	—	142	50	767	57	160	158	160	142

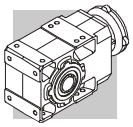

A 35...P(IEC)

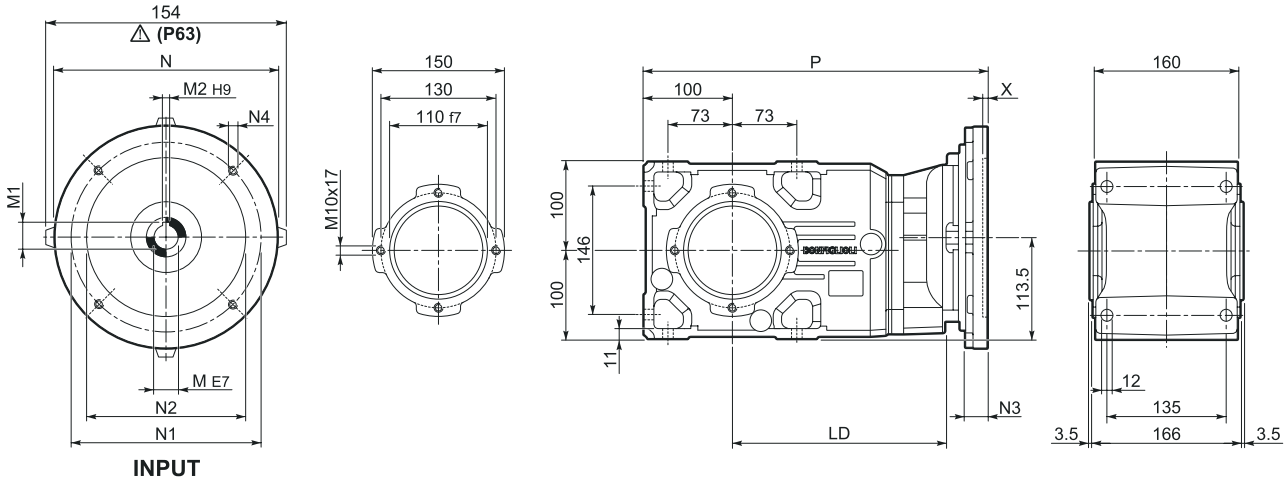

		LD	M	M1	M2	N	N1	N2	N3	N4	X	P	
A 35 2	**P63**	229.5	11	12.8	4	140	115	95	—	M8x19	4	359.5	28
A 35 2	**P71**	229.5	14	16.3	5	160	130	110	—	M8x16	4.5	359.5	28
A 35 2	**P80**	239.5	19	21.8	6	200	165	130	—	M10x14.5	4	379	29
A 35 2	**P90**	239.5	24	27.3	8	200	165	130	—	M10x14.5	4	379	29
A 35 2	**P100**	239.5	28	31.3	8	250	215	180	—	M12x16	4.5	389	32
A 35 2	**P112**	239.5	28	31.3	8	250	215	180	—	M12x16	4.5	389	32
A 35 2	**P132**	—	38	41.3	10	300	265	230	16	14	5	425.5	40
A 35 3	**P63**	—	11	12.8	4	140	115	95	—	M8x19	4	417	29
A 35 3	**P71**	—	14	16.3	5	160	130	110	—	M8x16	4.5	417	29
A 35 3	**P80**	—	19	21.8	6	200	165	130	—	M10x14.5	4	436.5	30
A 35 3	**P90**	—	24	27.3	8	200	165	130	—	M10x14.5	4	436.5	30
A 35 3	**P100**	—	28	31.3	8	250	215	180	—	M12x16	4.5	446.5	34
A 35 3	**P112**	—	28	31.3	8	250	215	180	—	M12x16	4.5	446.5	34

A 35...HS

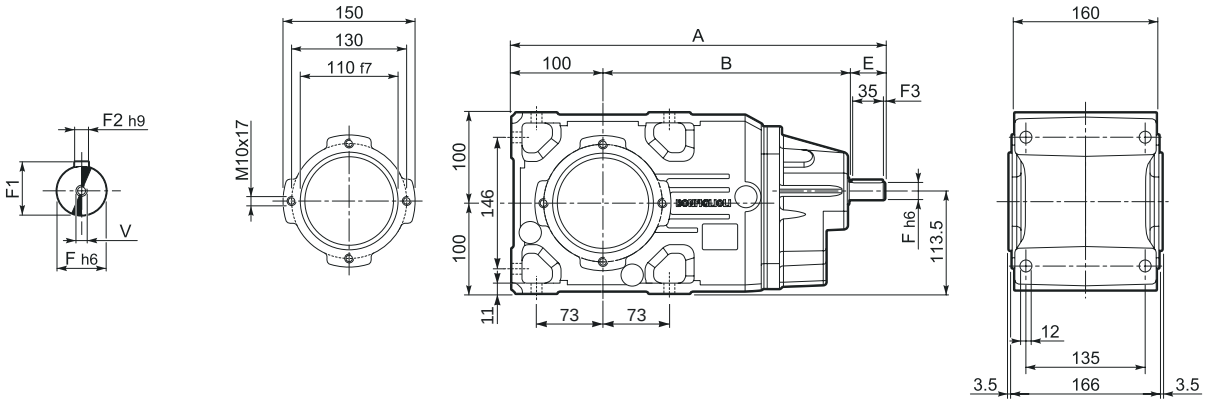

		A	B	E	F	F1	F2	F3	F4	V	
A 35 2	**HS**	409.5	269.5	40	19	21.5	6	2.5	35	M6x16	29
A 35 3		424	284	40	16	18	5	2.5	35	M6x16	29

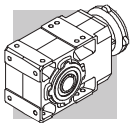

A 35...SK / SC

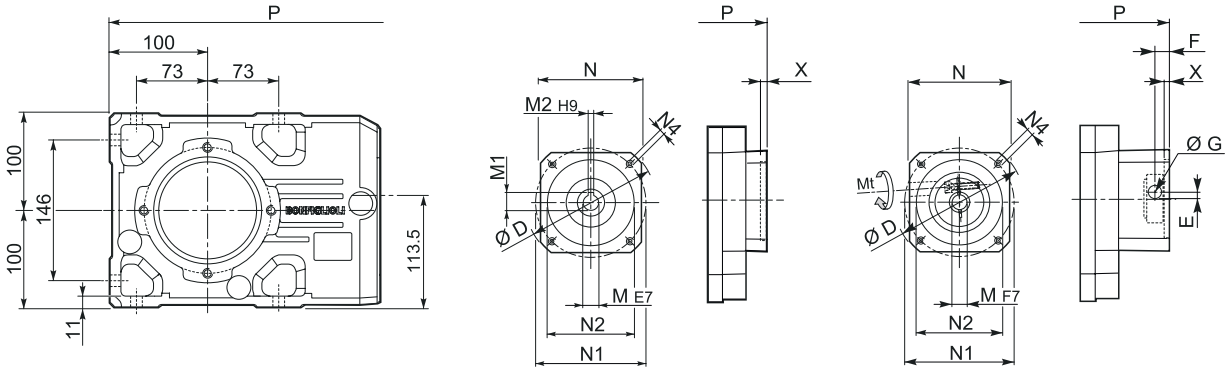

SK...

SC...

		D	M	M1	M2	N	N1	N2	N4	X	P 2x	P 3x	
A 35 2/3	**SK60A**	102	11	12.8	4	82	75	60	M5x10	3.5	331	388.5	27/28
A 35 2/3	**SK60B**	102	14	16.3	5	82	75	60	M5x10	4	338	395.5	28/29
A 35 2/3	**SK80A**	115	14	16.3	5	90	100	80	M6x12	4	338	395.5	28/29
A 35 2/3	**SK80C**	120	19	21.8	6	96	100	80	M6x12	4	379	436.5	29/30
A 35 2/3	**SK95A**	130	14	16.3	5	102	115	95	M8x12	4	379	436.5	29/30
A 35 2/3	**SK95B**	130	19	21.8	6	102	115	95	M8x12	4	379	436.5	29/30
A 35 2/3	**SK95C**	130	24	27.3	8	102	115	95	M8x12	4	379	436.5	29/30
A 35 2/3	**SK110A**	150	19	21.8	6	120	130	110	M8x12	5	379	436.5	29/30
A 35 2/3	**SK110B**	150	24	27.3	8	120	130	110	M8x12	5	379	436.5	29/30
A 35 2	**SK130A**	188	24	27.3	8	142	165	130	M10x20	5	379	—	30

			Mt [Nm]	D	E	F	G	M	N	N1	N2	N4	X	P 2x	P 3x	
A 35 2/3	**SC60A**	M6	15	102	7	12.5	12.5	11	82	75	60	M5x10	4	358	415.5	28/29
A 35 2/3	**SC60B**	M6	15	102	7	12.5	12.5	14	82	75	60	M5x10	4	358	415.5	29/30
A 35 2/3	**SC80A**	M6	15	115	6	12.5	12.5	14	90	100	80	M6x12	4	358	415.5	29/30
A 35 2/3	**SC80C**	M6	15	120	15.5	14.5	17.75	19	96	100	80	M6x12	4	402.5	460	30/31
A 35 2/3	**SC95A**	M6	15	130	16.5	15	17.75	14	102	115	95	M8x16	4	402.5	460	30/31
A 35 2/3	**SC95B**	M6	15	130	16.5	15	17.75	19	102	115	95	M8x16	4	402.5	460	30/31
A 35 2/3	**SC95C**	M6	15	130	16.5	15	17.75	24	102	115	95	M8x16	4	402.5	460	30/31
A 35 2/3	**SC110A**	M6	15	150	16.5	16	17.75	19	120	130	110	M8x16	5	402.5	460	32/33
A 35 2/3	**SC110B**	M6	15	150	16.5	16	17.75	24	120	130	110	M8x16	5	402.5	460	32/33
A 35 2	**SC130A**	M6	15	188	19	16	17.75	24	142	165	130	M10x20	5	402.5	—	33

A 35...F...

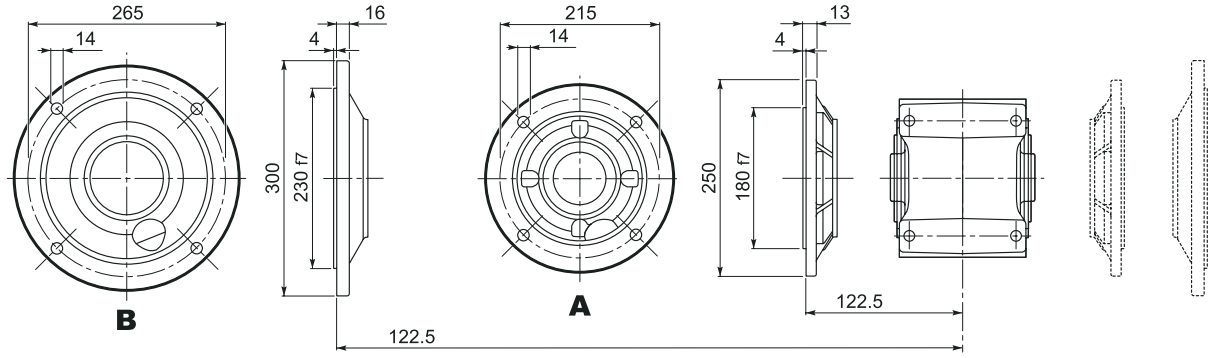

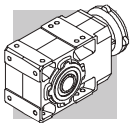

A 35

A 35...UR

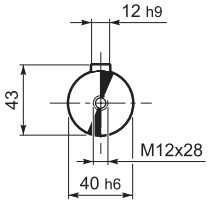

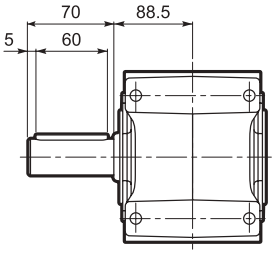

A 35...UD

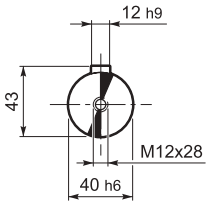

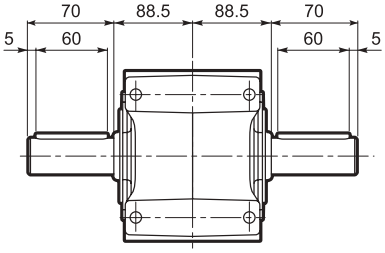

A 35...UH

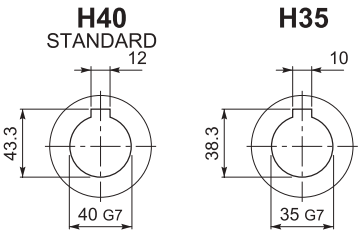

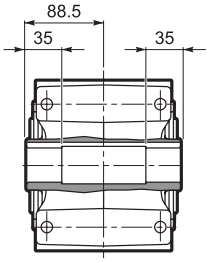

A 35...US

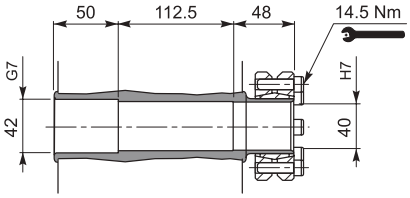

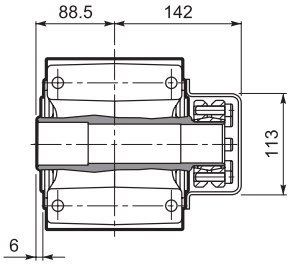

A 35...QF

	Ø
QF35	35
QF40	40

$M_{n2\ max}$ [Nm]	
A 35 QF35	550

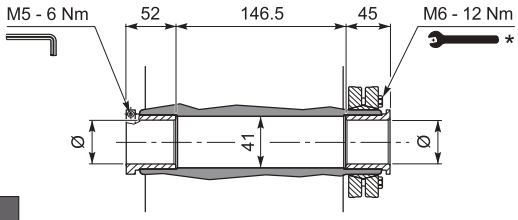

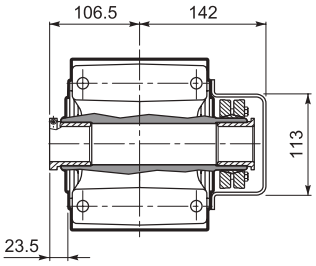

A 35...UV

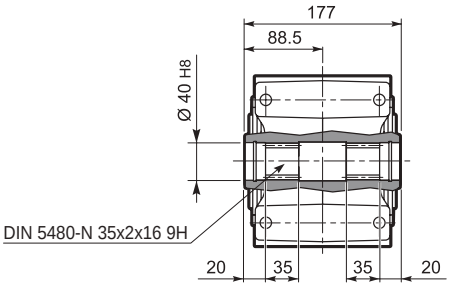

* Follow the MOUNTING INSTRUCTIONS supplied with the gearbox.

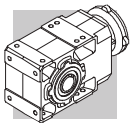

A 41...M

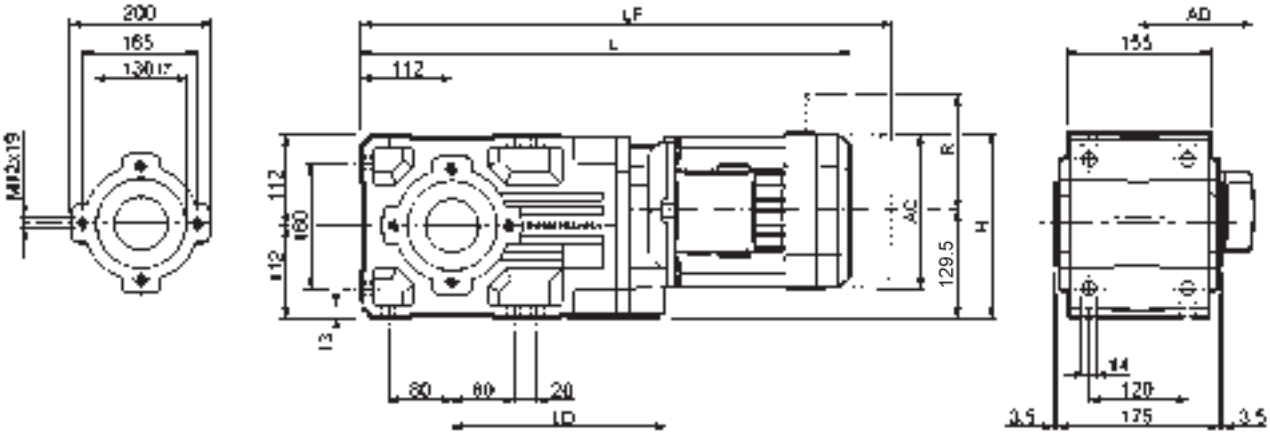

								M...FD M...FA		M...FD		M...FA	
			AC	H	L	LD	AD		LF		R	AD	R	AD
A 41 2	**S1**	**M1**	138	198.5	530	216.5	108	41	591	44	103	135	124	108
A 41 2	**S2**	**M2S**	156	207.5	559	232	119	45	629	49	129	146	134	119
A 41 2	**S3**	**M3S**	195	227	602	248	142	50	698	58	160	158	160	142
A 41 2	**S3**	**M3L**	195	227	634	248	142	58	725	65	160	158	160	142
A 41 2	**S4**	**M4**	258	258.5	742	—	193	92	851	110	226	210	217	193
A 41 2	**S4**	**M4LC**	258	258.5	777	—	193	100	876	118	226	210	217	193
A 41 3	**S05**	**M05**	121	245	562.5	—	95	44	628.5	46	96	122	116	95
A 41 3	**S1**	**M1**	138	198.5	591.5	—	108	46	652.5	49	103	135	124	108
A 41 3	**S2**	**M2S**	156	207.5	620.5	—	119	50	690.5	58	129	146	134	119
A 41 3	**S3**	**M3S**	195	227	663.5	—	142	55	759.5	62	160	158	160	142
A 41 3	**S3**	**M3L**	195	227	695.5	—	142	61	786.5	68	160	158	160	142

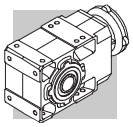

A 41...P(IEC)

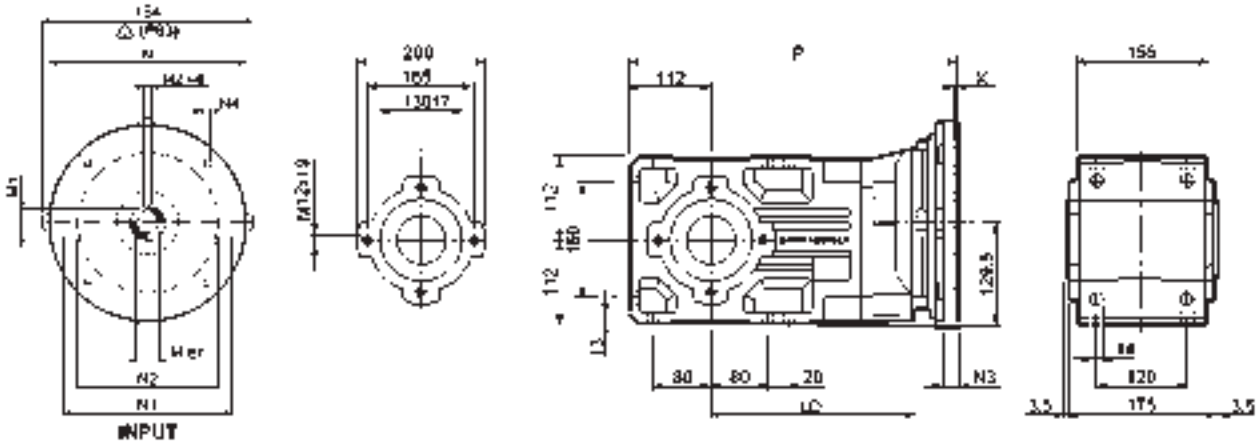

		LD	M	M1	M2	N	N1	N2	N3	N4	X	P	
A 41 2	**P63**	232	11	12.8	4	140	115	95	—	M8x19	4	375	37
A 41 2	**P71**	232	14	16.3	5	160	130	110	—	M8x16	4.5	375	38
A 41 2	**P80**	248	19	21.8	6	200	165	130	—	M10x14.5	4	394.5	39
A 41 2	**P90**	248	24	27.3	8	200	165	130	—	M10x14.5	4	394.5	39
A 41 2	**P100**	—	28	31.3	8	250	215	180	—	M12x16	4.5	404.5	43
A 41 2	**P112**	—	28	31.3	8	250	215	180	—	M12x16	4.5	404.5	43
A 41 2	**P132**	—	38	41.3	10	300	265	230	16	14	5	441	46
A 41 3	**P63**	—	11	12.8	4	140	115	95	—	M8x19	4	436.5	39
A 41 3	**P71**	—	14	16.3	5	160	130	110	—	M8x16	4.5	436.5	39
A 41 3	**P80**	—	19	21.8	6	200	165	130	—	M10x14.5	4	456	40
A 41 3	**P90**	—	24	27.3	8	200	165	130	—	M10x14.5	4	456	40
A 41 3	**P100**	—	28	31.3	8	250	215	180	—	M12x16	4.5	466	44
A 41 3	**P112**	—	28	31.3	8	250	215	180	—	M12x16	4.5	466	44

A 41...HS

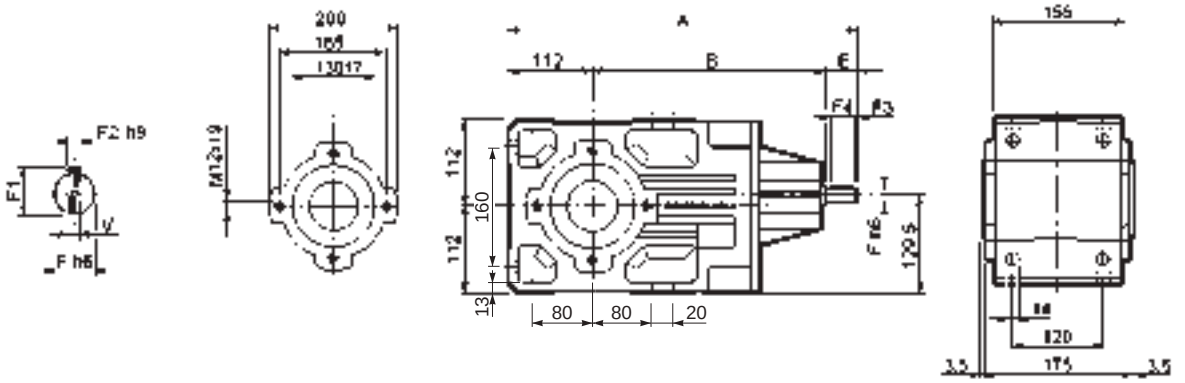

		A	B	E	F	F1	F2	F3	F4	V	
A 41 2	**HS**	464	302.5	50	24	27	8	2.5	45	M8x19	40.7
A 41 3		486.5	334.5	40	19	21.5	6	2.5	35	M6x16	39.5

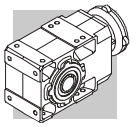

A 41...SK / SC

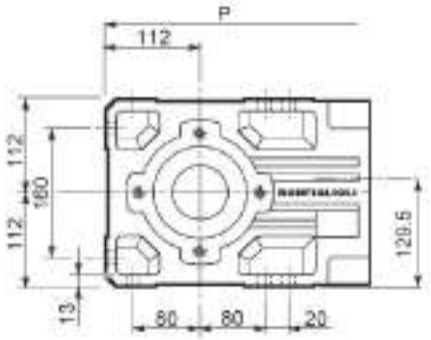

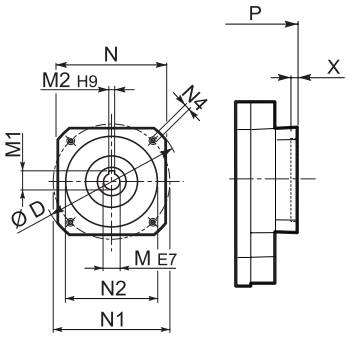

SK...

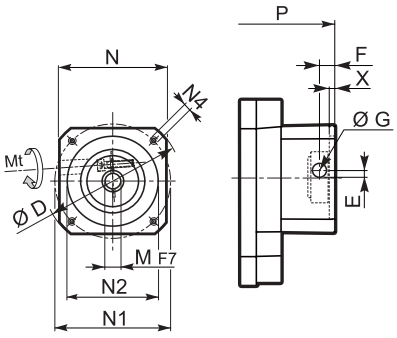

SC...

		D	M	M1	M2	N	N1	N2	N4	X	P 2x	P 3x	
A41 3	**SK60A**	102	11	12.8	4	82	75	60	M5x10	3.5	—	408	40
A41 3	**SK60B**	102	14	16.3	5	82	75	60	M5x10	4	—	415	40
A41 3	**SK80A**	115	14	16.3	5	90	100	80	M6x12	4	—	415	40
A41 2	**SK80B**	120	14	16.3	5	96	100	80	M6x12	4	394.5	—	39
A41 2/3	**SK80C**	120	19	21.8	6	96	100	80	M6x12	4	394.5	456	39/40
A41 2/3	**SK95A**	130	14	16.3	5	102	115	95	M8x12	4	394.5	456	39/40
A41 2/3	**SK95B**	130	19	21.8	6	102	115	95	M8x12	4	394.5	456	39/41
A41 2/3	**SK95C**	130	24	27.3	8	102	115	95	M8x12	4	394.5	456	39/44
A41 2/3	**SK110A**	150	19	21.8	6	120	130	110	M8x12	5	394.5	456	39/44
A41 2/3	**SK110B**	150	24	27.3	8	120	130	110	M8x12	5	394.5	456	39/44
A41 2	**SK130A**	188	24	27.3	8	142	165	130	M10x20	5	394.5	—	41
A41 2	**SK130B**	189	32	35.3	10	160	165	130	M10x20	5	441	—	43
A41 2	**SK180A**	240	32	35.3	10	192	215	180	M12x19	5	441	—	43
A41 2	**SK180B**	240	38	41.3	10	192	215	180	M12x19	5	441	—	43

			Mt [Nm]	D	E	F	G	M	N	N1	N2	N4	X	P 2x	P 3x	
A41 3	**SC60A**	M6	15	102	7	12.5	12.5	11	82	75	60	M5x10	4	—	435	41
A41 3	**SC60B**	M6	15	102	7	12.5	12.5	14	82	75	60	M5x10	4	—	435	41
A41 3	**SC80A**	M6	15	115	6	12.5	12.5	14	90	100	80	M6x12	4	—	435	41
A41 2	**SC80B**	M6	15	120	15.5	14.5	17.75	14	96	100	80	M6x12	4	418	—	40
A41 2/3	**SC80C**	M6	15	120	15.5	14.5	17.75	19	96	100	80	M6x12	4	418	479.5	40/41
A41 2/3	**SC95A**	M6	15	130	16.5	15	17.75	14	102	115	95	M8x16	4	418	479.5	40/42
A41 2/3	**SC95B**	M6	15	130	16.5	15	17.75	19	102	115	95	M8x16	4	418	479.5	40/42
A41 2/3	**SC95C**	M6	15	130	16.5	15	17.75	24	102	115	95	M8x16	4	418	479.5	40/43
A41 2/3	**SC110A**	M6	15	150	16.5	16	17.75	19	120	130	110	M8x16	5	418	479.5	41/47
A41 2/3	**SC110B**	M6	15	150	16.5	16	17.75	24	120	130	110	M8x16	5	418	479.5	41/47
A41 2	**SC130A**	M6	15	188	19	16	17.75	24	142	165	130	M10x20	5	418	—	42
A41 2	**SC130B**	M8	36	189	20	17	17.75	32	160	165	130	M10x20	5	464	—	46
A41 2	**SC180A**	M8	36	240	20	17.5	17.75	32	192	215	180	M12x24	5	468	—	46
A41 2	**SC180B**	M8	36	240	20	17.5	17.75	38	192	215	180	M12x24	5	468	—	46

A 41...F...

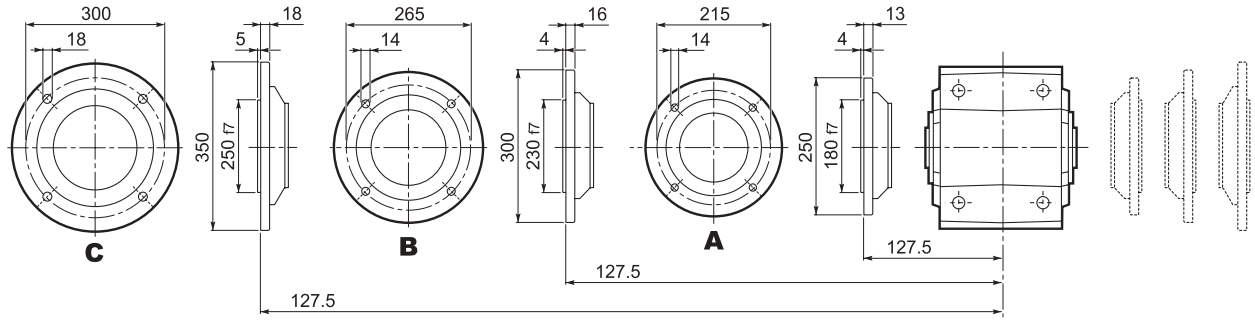

Bonfiglioli Riduttori

A 41

A 41...UR

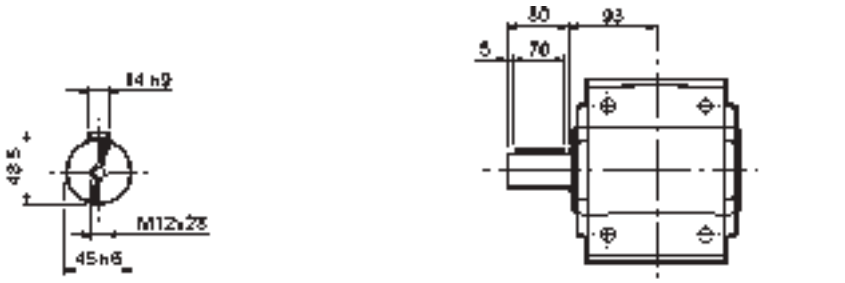

A 41...UD

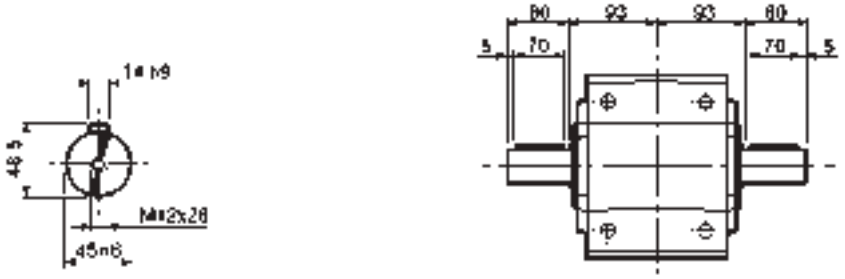

A 41...UH

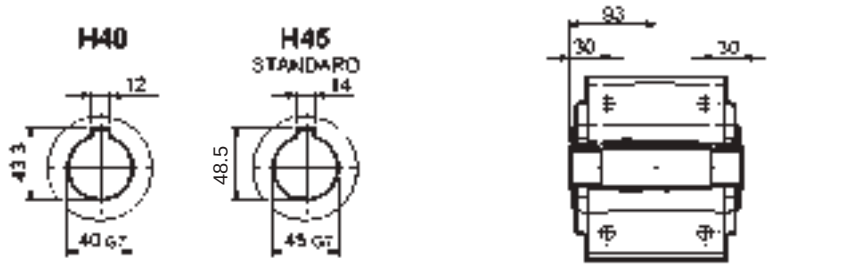

A 41...US

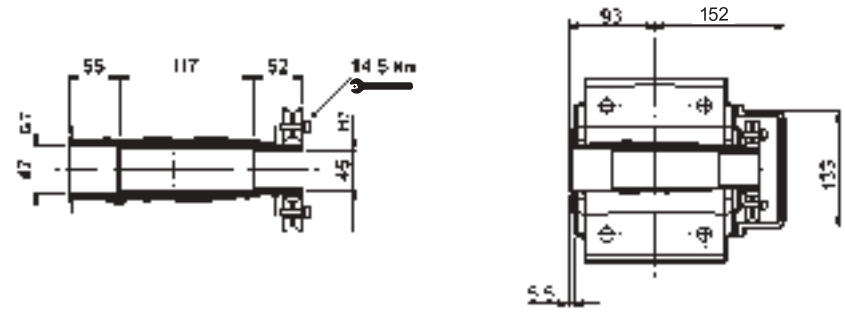

A 41...QF

	Ø
QF40	40
QF45	45

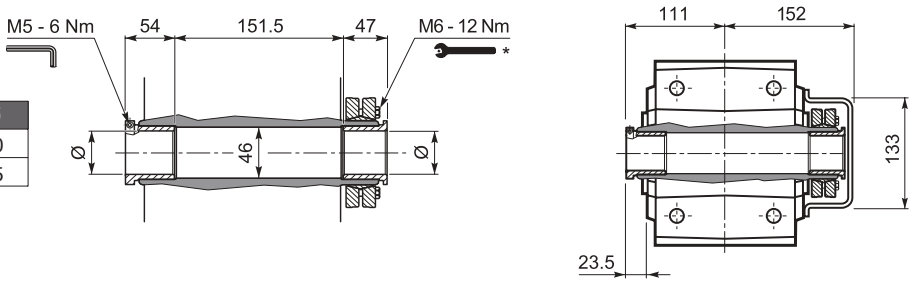

A 41...UV

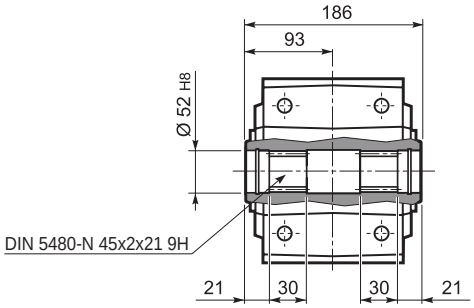

* Follow the MOUNTING INSTRUCTIONS supplied with the gearbox.

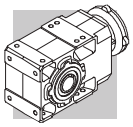

A 50...M

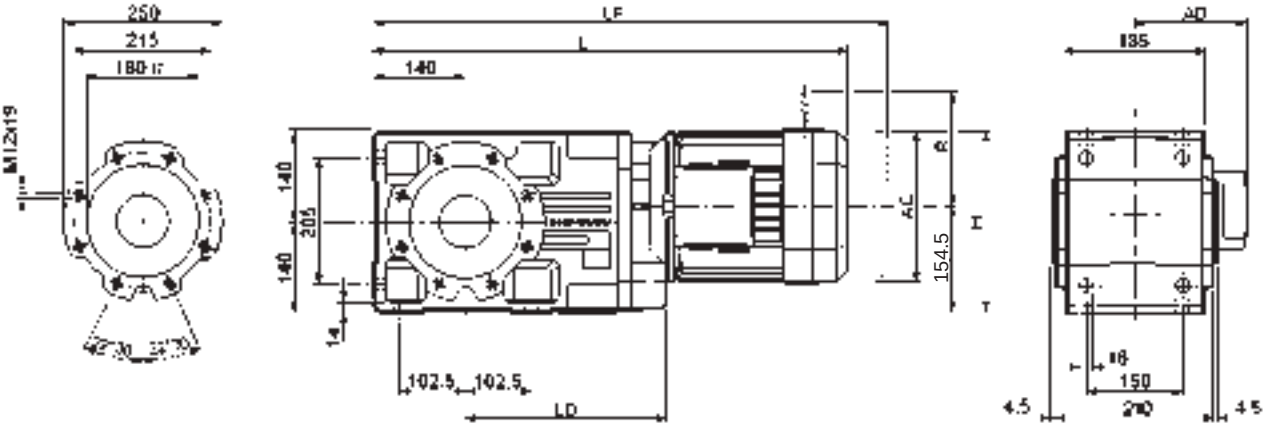

									M...FD M...FA		M...FD		M...FA	
			AC	H	L	LD	AD		LF		R	AD	R	AD
A 50 2/3	**S1**	**M1**	138	223	609.5	—	108	66	670.5	69	103	135	124	108
A 50 2/3	**S2**	**M2S**	156	232	638.5	284.5	119	68	708.5	72	129	146	134	119
A 50 2/3	**S3**	**M3S**	195	251.5	681.5	299.5	142	73	777.5	81	160	158	160	142
A 50 2/3	**S3**	**M3L**	195	251.5	713.5	299.5	142	81	804.5	88	160	158	160	142
A 50 2/3	**S4**	**M4**	258	283	821.5	284.5	193	115	930.5	133	226	210	217	193
A 50 2/3	**S4**	**M4LC**	258	283	856.5	284.5	193	123	955.5	141	226	210	217	193
A 50 2/3	**S5**	**M5S**	310	309	908	—	245	143	1048	173	266	245	247	245
A 50 2/3	**S5**	**M5L**	310	309	952	—	245	159	1092	189	266	245	247	245
A 50 4	**S1**	**M1**	138	223	681	—	108	67	742	70	103	135	124	108
A 50 4	**S2**	**M2S**	156	232	710	—	119	71	780	75	129	146	134	119
A 50 4	**S3**	**M3S**	195	251.5	753	—	142	76	849	76	160	158	160	142
A 50 4	**S3**	**M3L**	195	251.5	785	—	142	83	876	78	160	158	160	142

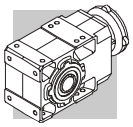

A 50...P(IEC)

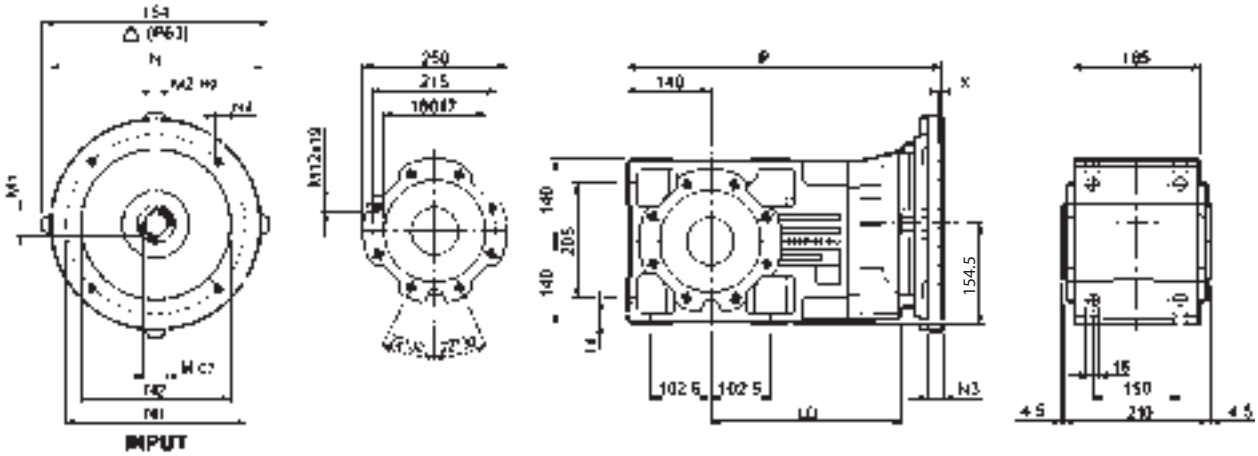

		LD	M	M1	M2	N	N1	N2	N3	N4	X	P	
A 50 2/3	**P63**	284.5	11	12.8	4	140	115	95	—	M8x19	4	454.5	60
A 50 2/3	**P71**	284.5	14	16.3	5	160	130	110	—	M8x16	4.5	454.5	60
A 50 2/3	**P80**	299.5	19	21.8	6	200	165	130	—	M10x14.5	4	474	61
A 50 2/3	**P90**	299.5	24	27.3	8	200	165	130	—	M10x14.5	4	474	61
A 50 2/3	**P100**	284.5	28	31.3	8	250	215	180	—	M12x16	4.5	484	65
A 50 2/3	**P112**	284.5	28	31.3	8	250	215	180	—	M12x16	4.5	484	65
A 50 2/3	**P132**	284.5	38	41.3	10	300	265	230	16	14	5	520.5	68
A 50 2/3	**P160**	—	42	45.3	12	350	300	250	23	18	5.5	571	72
A 50 2/3	**P180**	—	48	51.8	14	350	300	250	23	18	5.5	571	72
A 50 4	**P63**	—	11	12.8	4	140	115	95	—	M8x19	4	526	62
A 50 4	**P71**	—	14	16.3	5	160	130	110	—	M8x16	4.5	526	62
A 50 4	**P80**	—	19	21.8	6	200	165	130	—	M10x14.5	4	545.5	63
A 50 4	**P90**	—	24	27.3	8	200	165	130	—	M10x14.5	4	545.5	63
A 50 4	**P100**	—	28	31.3	8	250	215	180	—	M12x16	4.5	555.5	67
A 50 4	**P112**	—	28	31.3	8	250	215	180	—	M12x16	4.5	555.5	67

A 50...HS

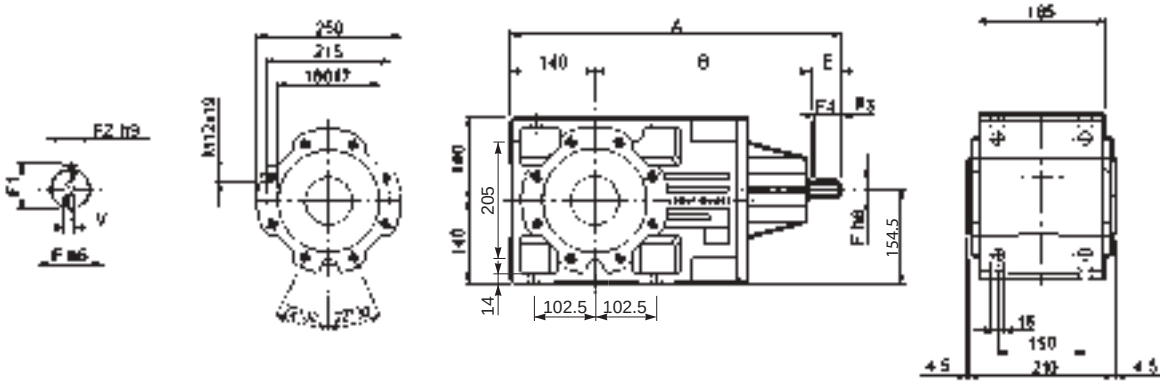

		A	B	E	F	F1	F2	F3	F4	V	
A 50 2		543.5	353.5	50	24	27	8	2.5	45	M8x19	72
A 50 3	**HS**	543.5	353.5	50	24	27	8	2.5	45	M8x19	76
A 50 4		576	396	40	19	21.5	6	2.5	35	M6x16	77

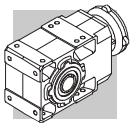

A 50...SK / SC

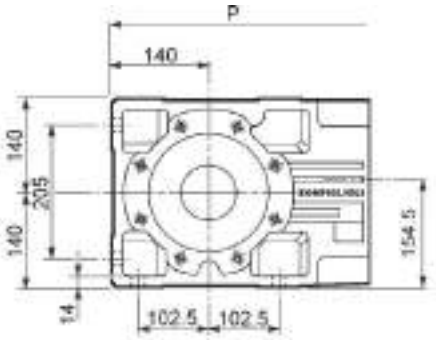

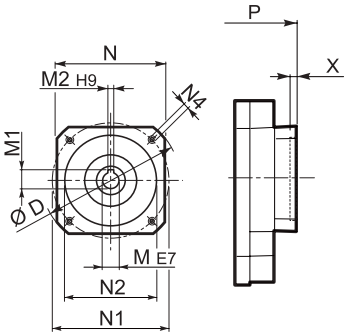

SK...

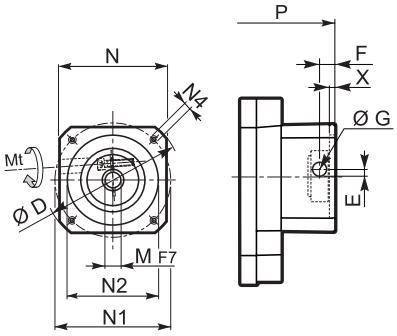

SC...

		D	M	M1	M2	N	N1	N2	N4	X	P 2/3x	P 4x	
A 50 2/3	**SK80B**	120	14	16.3	5	96	100	80	M6x12	4	474	—	61/61
A 50 2/3/4	**SK80C**	120	19	21.8	6	96	100	80	M6x12	4	474	545.5	61/61/63
A 50 2/3/4	**SK95A**	130	14	16.3	5	102	115	95	M8x12	4	474	545.5	61/61/63
A 50 2/3/4	**SK95B**	130	19	21.8	6	102	115	95	M8x12	4	474	545.5	61/61/63
A 50 2/3/4	**SK95C**	130	24	27.3	8	102	115	95	M8x12	4	474	545.5	61/61/63
A 50 2/3/4	**SK110A**	150	19	21.8	6	120	130	110	M8x12	5	474	545.5	61/61/65
A 50 2/3/4	**SK110B**	150	24	27.3	8	120	130	110	M8x12	5	474	575	61/61/65
A 50 2/3/4	**SK130A**	188	24	27.3	8	142	165	130	M10x20	5	474	575	63/63/66
A 50 2/3	**SK130B**	189	32	35.3	10	160	165	130	M10x20	5	520.5	—	69/69
A 50 2/3	**SK180A**	240	32	35.3	10	192	215	180	M12x19	5	520.5	—	69/69
A 50 2/3	**SK180B**	240	38	41.3	10	192	215	180	M12x19	5	520.5	—	69/69

			Mt [Nm]	D	E	F	G	M	N	N1	N2	N4	X	P 2/3x	P 3x	
A 50 2/3	**SC80B**	M6	15	120	15.5	14.5	17.75	14	96	100	80	M6x12	4	497.5	—	62/62
A 50 2/3/4	**SC80C**	M6	15	120	15.5	14.5	17.75	19	96	100	80	M6x12	4	497.5	569	62/62/64
A 50 2/3/4	**SC95A**	M6	15	130	16.5	15	17.75	14	102	115	95	M8x16	4	497.5	569	62/62/64
A 50 2/3/4	**SC95B**	M6	15	130	16.5	15	17.75	19	102	115	95	M8x16	4	497.5	569	62/62/64
A 50 2/3/4	**SC95C**	M6	15	130	16.5	15	17.75	24	102	115	95	M8x16	4	497.5	569	62/62/64
A 50 2/3/4	**SC110A**	M6	15	150	16.5	16	17.75	19	120	130	110	M8x16	5	497.5	569	63/63/66
A 50 2/3/4	**SC110B**	M6	15	150	16.5	16	17.75	24	120	130	110	M8x16	5	497.5	569	63/63/66
A 50 2/3/4	**SC130A**	M6	15	188	19	16	17.75	24	142	165	130	M10x20	5	497.5	569	64/64/67
A 50 2/3	**SC130B**	M8	36	189	20	17	17.75	32	160	165	130	M10x20	5	543.5	—	68/68
A 50 2/3	**SC180A**	M8	36	240	20	17.5	17.75	32	192	215	180	M12x24	5	547.5	—	68/68
A 50 2/3	**SC180B**	M8	36	240	20	17.5	17.75	38	192	215	180	M12x24	5	547.5	—	68/68

A 50...F...

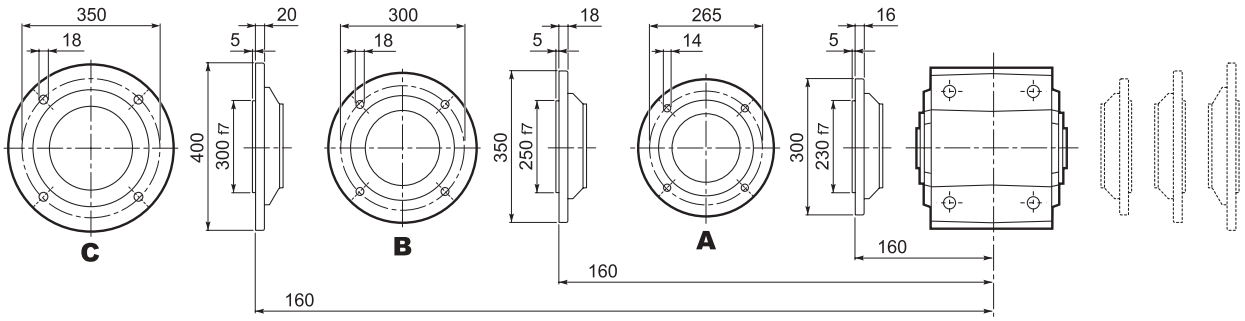

Bonfiglioli Riduttori

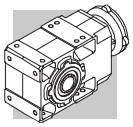

A 50

A 50...UR

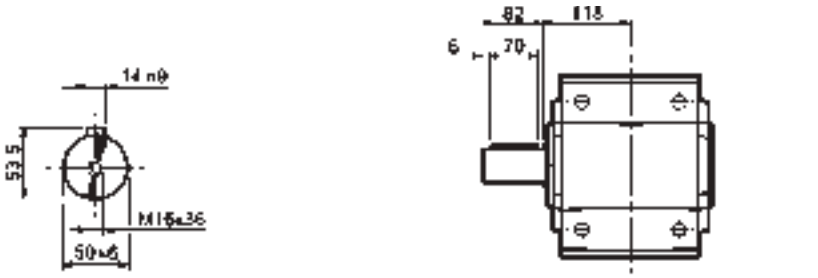

A 50...UD

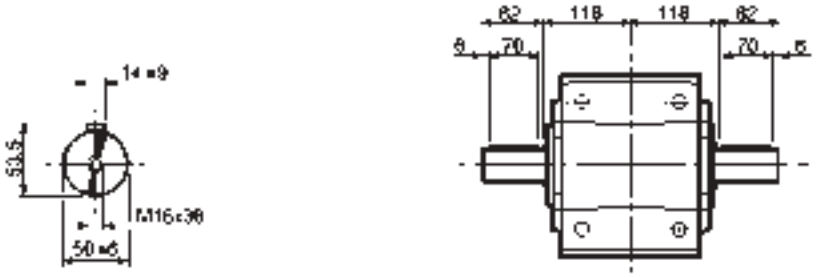

A 50...UH

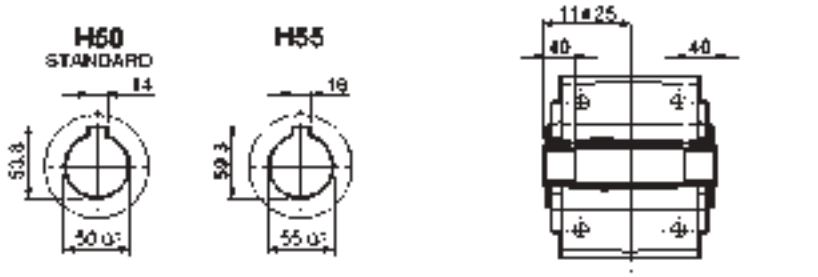

A 50...US

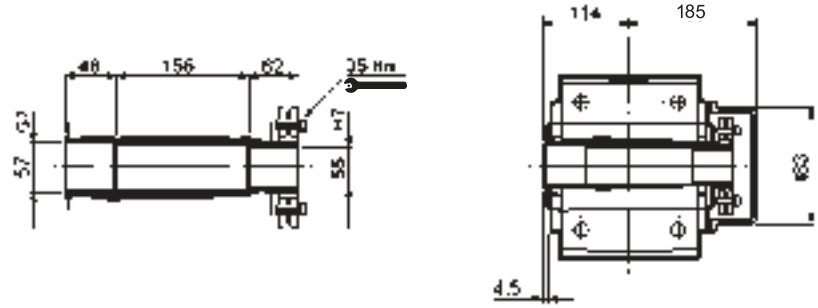

A 50...QF

	Ø
QF50	50
QF55	55

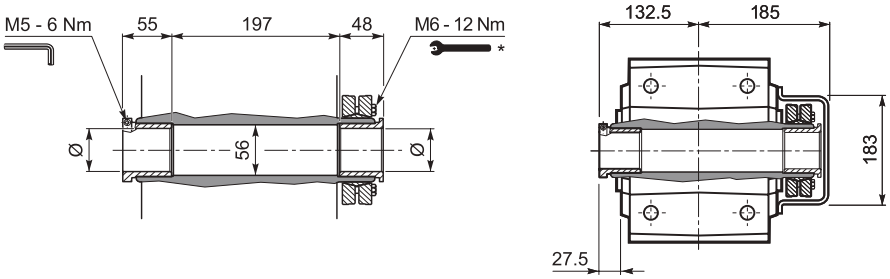

A 50...UV

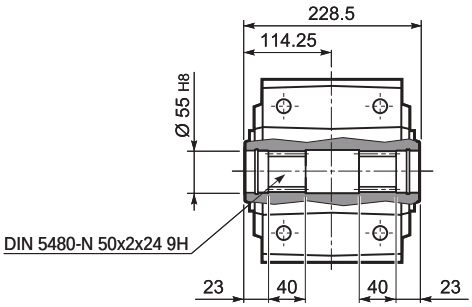

* Follow the MOUNTING INSTRUCTIONS supplied with the gearbox.

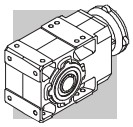

A 55...M

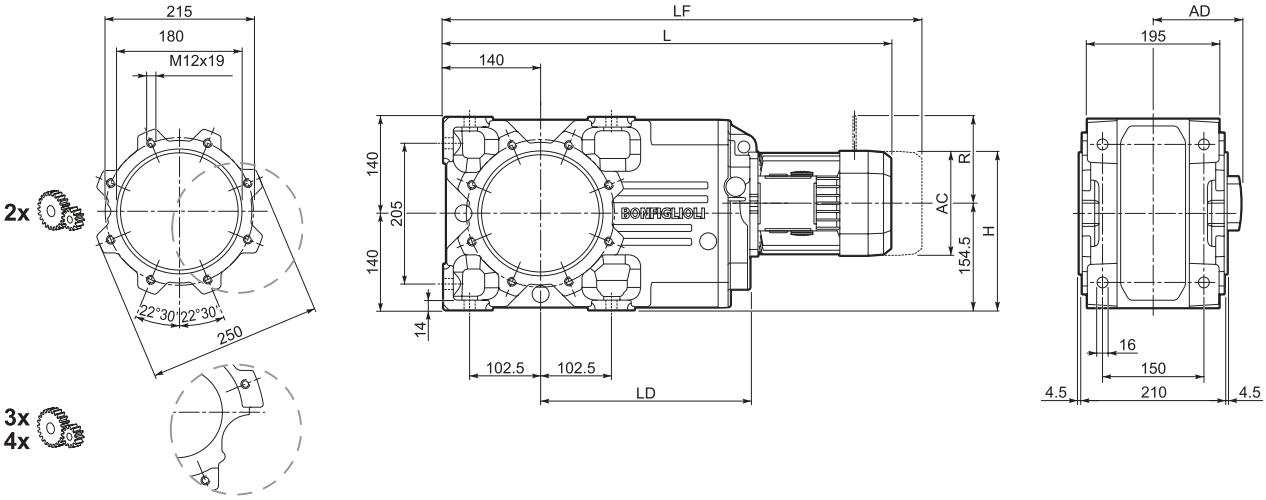

									M...FD M...FA		M...FD		M...FA	
			AC	H	L	LD	AD		LF		R	AD	R	AD
A 55 3	**S1**	**M1**	138	198.5	627.5	—	108	81	688.5	84	103	135	124	108
A 55 2/3	**S2**	**M2S**	156	232	656.5	302.5	119	88	726.5	92	129	146	134	119
A 55 2/3	**S3**	**M3S**	195	251	699.5	317.5	142	93	795.5	99	160	158	160	142
A 55 2/3	**S3**	**M3L**	195	251	731.5	317.5	142	101	822.5	108	160	158	160	142
A 55 2/3	**S4**	**M4**	258	283	839.5	302.5	193	135	948.5	153	226	210	217	193
A 55 2/3	**S4**	**M4LC**	258	283	874.5	302.5	193	143	973.5	161	226	210	217	193
A 55 2/3	**S5**	**M5S**	310	309.5	926	—	245	163	1066	193	266	245	247	245
A 55 2/3	**S5**	**M5L**	310	309.5	970	—	245	179	1110	209	266	245	247	245
A 55 4	**S1**	**M1**	138	223	699	—	108	82	760	85	103	135	124	108
A 55 4	**S2**	**M2S**	156	232	728	—	119	86	798	90	129	146	134	119
A 55 4	**S3**	**M3S**	195	251.5	771	—	142	91	867	98	160	158	160	142
A 55 4	**S3**	**M3L**	195	251.5	803	—	142	98	894	105	160	158	160	142

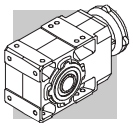

A 55...P(IEC)

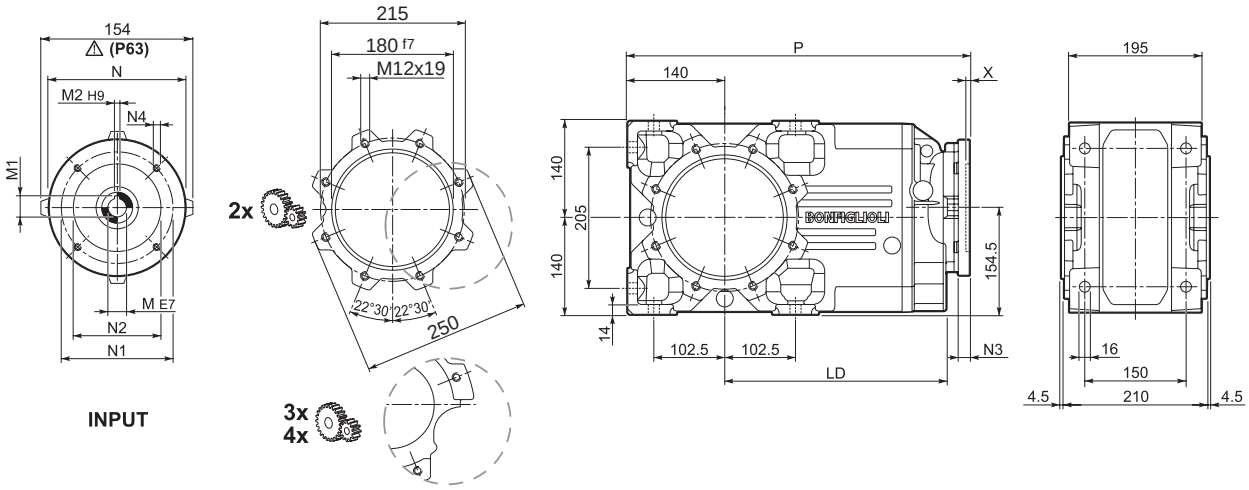

		LD	M	M1	M2	N	N1	N2	N3	N4	X	P	
A 55 3	**P63**	302.5	11	12.8	4	140	115	95	—	M8x19	4	472.5	75
A 55 3	**P71**	302.5	14	16.3	5	160	130	110	—	M8x16	4.5	472.5	75
A 55 2/3	**P80**	317.5	19	21.8	6	200	165	130	—	M10x14.5	4	492	81
A 55 2/3	**P90**	317.5	24	27.3	8	200	165	130	—	M10x14.5	4	492	81
A 55 2/3	**P100**	302.5	28	31.3	8	250	215	180	—	M12x16	4.5	502	85
A 55 2/3	**P112**	302.5	28	31.3	8	250	215	180	—	M12x16	4.5	502	85
A 55 2/3	**P132**	302.5	38	41.3	10	300	265	230	16	14	5	538.5	93
A 55 2/3	**P160**	—	42	45.3	12	350	300	250	23	18	5.5	589	110
A 55 2/3	**P180**	—	48	51.8	14	350	300	250	23	18	5.5	589	110
A 55 4	**P63**	—	11	12.8	4	140	115	95	—	M8x19	4	544	77
A 55 4	**P71**	—	14	16.3	5	160	130	110	—	M8x16	4.5	544	77
A 55 4	**P80**	—	19	21.8	6	200	165	130	—	M10x14.5	4	563.5	78
A 55 4	**P90**	—	24	27.3	8	200	165	130	—	M10x14.5	4	563.5	78
A 55 4	**P100**	—	28	31.3	8	250	215	180	—	M12x16	4.5	573.5	82
A 55 4	**P112**	—	28	31.3	8	250	215	180	—	M12x16	4.5	573.5	82

A 55...HS

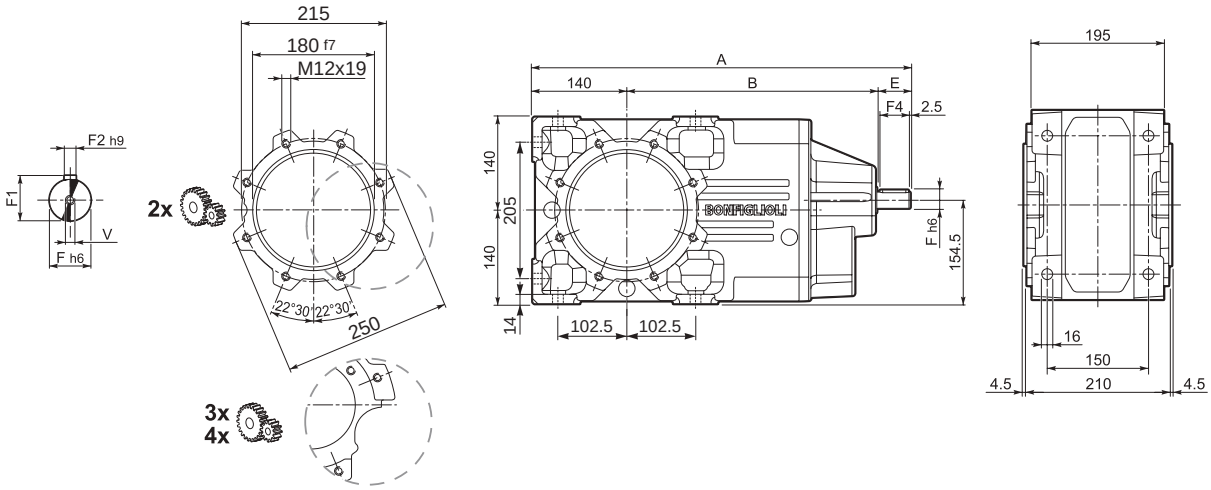

		A	B	E	F	F1	F2	F3	F4	V	
A 55 2		561.5	371.5	50	24	27	8	2.5	45	M8x19	96
A 55 3	**HS**	561.5	371.5	50	24	27	8	2.5	45	M8x19	91
A 55 4		594	414	40	19	21.5	6	2.5	35	M6x16	92

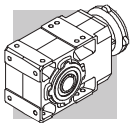

A 55...SK / SC

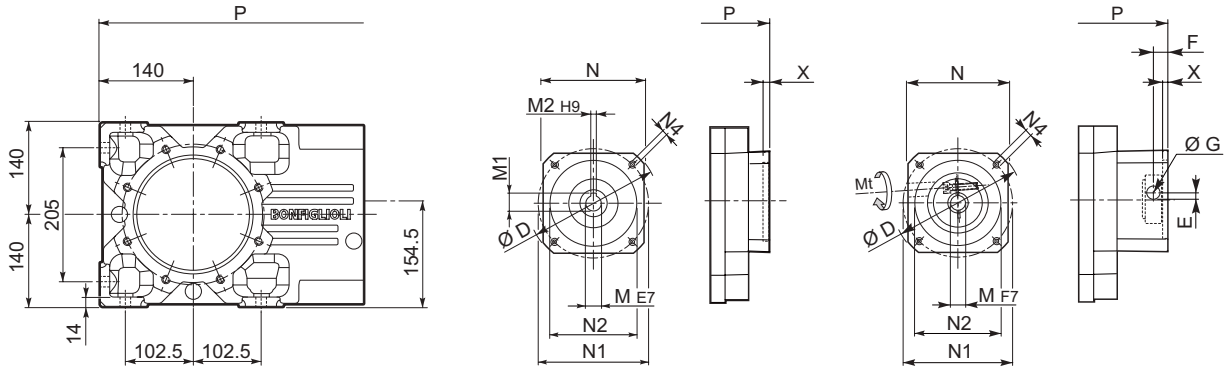

SK...

SC...

		D	M	M1	M2	N	N1	N2	N4	X	P 2/3x	P 4x	
A 55 3	**SK80B**	120	14	16.3	5	96	100	80	M6x12	4	492	—	81
A 55 2/3/4	**SK80C**	120	19	21.8	6	96	100	80	M6x12	4	492	563.5	81/81/77
A 55 3/4	**SK95A**	130	14	16.3	5	102	115	95	M8x12	4	492	563.5	81/81/77
A 55 2/3/4	**SK95B**	130	19	21.8	6	102	115	95	M8x12	4	492	563.5	81/81/77
A 55 2/3/4	**SK95C**	130	24	27.3	8	102	115	95	M8x12	4	492	563.5	81/81/77
A 55 2/3/4	**SK110A**	150	19	21.8	6	120	130	110	M8x12	5	492	593	81/81/78
A 55 2/3/4	**SK110B**	150	24	27.3	8	120	130	110	M8x12	5	492	593	81/81/78
A 55 2/3/4	**SK130A**	188	24	27.3	8	142	165	130	M10x20	5	492	593	83/83/79
A 55 2/3	**SK130B**	189	32	35.3	10	160	165	130	M10x20	5	538.5	—	90/90
A 55 2/3	**SK180A**	240	32	35.3	10	192	215	180	M12x19	5	538.5	—	90/90
A 55 2/3	**SK180B**	240	38	41.3	10	192	215	180	M12x19	5	538.5	—	90/90

			Mt [Nm]	D	E	F	G	M	N	N1	N2	N4	X	P 2/3x	P 3x	
A 55 3	**SC80B**	M6	15	120	15.5	14.5	17.75	14	96	100	80	M6x12	4	515.5	—	82
A 55 2/3/4	**SC80C**	M6	15	120	15.5	14.5	17.75	19	96	100	80	M6x12	4	515.5	587	82/82/78
A 55 3/4	**SC95A**	M6	15	130	16.5	15	17.75	14	102	115	95	M8x16	4	515.5	587	82/82/78
A 55 2/3/4	**SC95B**	M6	15	130	16.5	15	17.75	19	102	115	95	M8x16	4	515.5	587	82/82/78
A 55 2/3/4	**SC95C**	M6	15	130	16.5	15	17.75	24	102	115	95	M8x16	4	515.5	587	82/82/78
A 55 2/3/4	**SC110A**	M6	15	150	16.5	16	17.75	19	120	130	110	M8x16	5	515.5	587	83/83/79
A 55 2/3/4	**SC110B**	M6	15	150	16.5	16	17.75	24	120	130	110	M8x16	5	515.5	587	83/83/79
A 55 2/3/4	**SC130A**	M6	15	188	19	16	17.75	24	142	165	130	M10x20	5	515.5	587	84/84/80
A 55 2/3	**SC130B**	M8	36	189	20	17	17.75	32	160	165	130	M10x20	5	561.5	—	93/93
A 55 2/3	**SC180A**	M8	36	240	20	17.5	17.75	32	192	215	180	M12x24	5	565.5	—	93/93
A 55 2/3	**SC180B**	M8	36	240	20	17.5	17.75	38	192	215	180	M12x24	5	565.5	—	93/93

A 55...F...

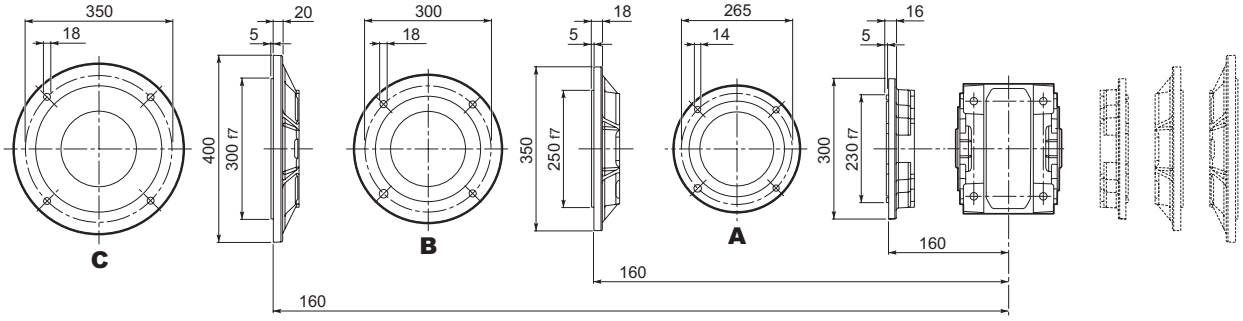

Bonfiglioli Riduttori

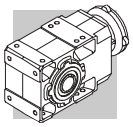

A 55

A 55...UR

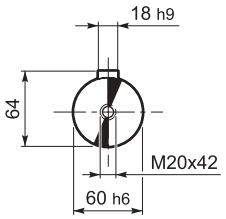

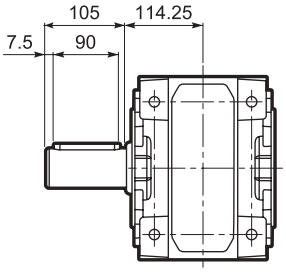

A 55...UD

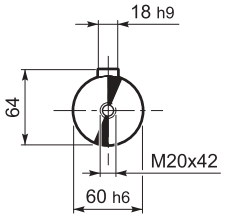

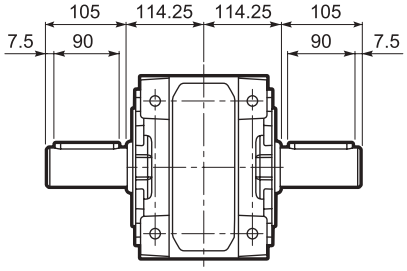

A 55...UH

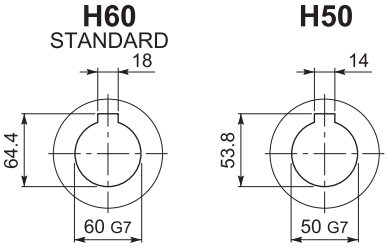

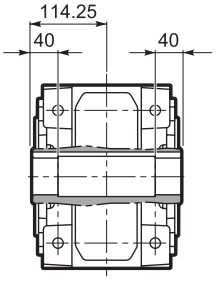

A 55...US

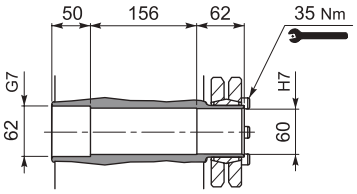

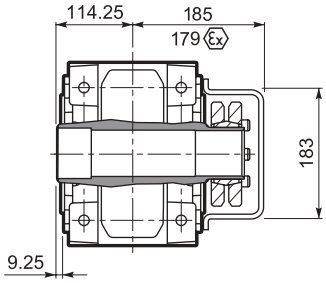

A 55...QF

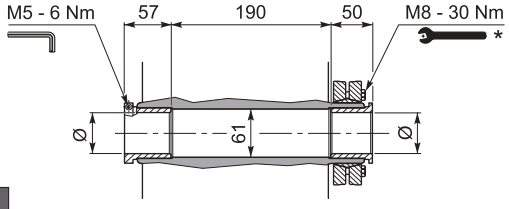

	Ø
QF55	55
QF60	60

	$M_{n2\ max}$ [Nm]
A 55 QF55	1900

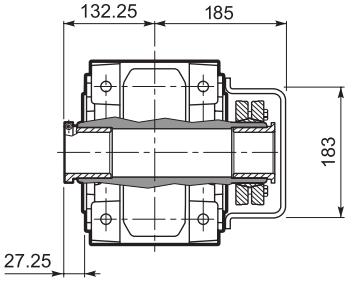

A 55...UV

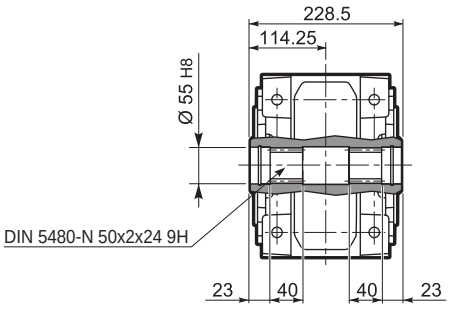

* Follow the MOUNTING INSTRUCTIONS supplied with the gearbox.

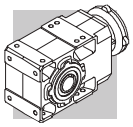

A 60...M

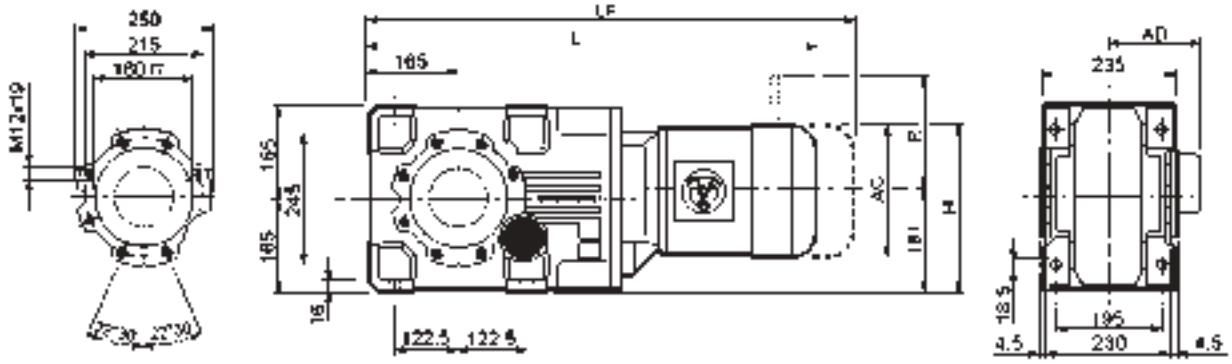

								M...FD M...FA		M...FD		M...FA	
			AC	H	L	AD		LF		R	AD	R	AD
A 60 2/3	**S2**	**M2S**	156	256.5	700.5	119	98	770.5	102	129	146	134	119
A 60 2/3	**S3**	**M3S**	195	276	743.5	142	103	839.5	111	160	158	160	142
A 60 2/3	**S3**	**M3L**	195	276	775.5	142	111	866.5	118	160	158	160	142
A 60 2/3	**S4**	**M4**	258	307.5	883.5	193	145	992.5	163	226	210	217	193
A 60 2/3	**S4**	**M4LC**	258	307.5	918.5	193	153	1017.5	171	226	210	217	193
A 60 2/3	**S5**	**M5S**	310	333.5	970	245	173	1110	203	266	245	247	245
A 60 2/3	**S5**	**M5L**	310	333.5	1014	245	189	1154	219	266	245	247	245
A 60 4	**S1**	**M1**	138	247.5	742	108	100	803	103	103	135	124	108
A 60 4	**S2**	**M2S**	156	256.5	771	119	104	841	108	129	146	134	119
A 60 4	**S3**	**M3S**	195	276	814	142	109	910	117	160	158	160	142
A 60 4	**S3**	**M3L**	195	276	846	142	117	937	124	160	158	160	142

Bonfiglioli Riduttori

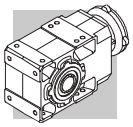

A 60...P(IEC)

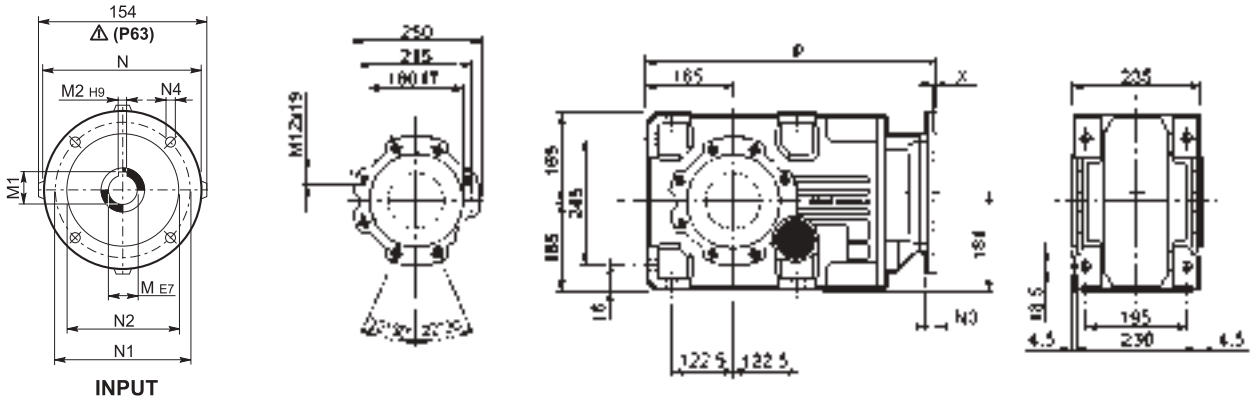

		M	M1	M2	N	N1	N2	N3	N4	X	P	
A 60 3	**P63**	11	12.8	4	140	115	95	—	M8x19	4	516.5	90
A 60 3	**P71**	14	16.3	5	160	130	110	—	M8x16	4.5	516.5	90
A 60 2/3	**P80**	19	21.8	6	200	165	130	—	M10x14.5	4	536	91
A 60 2/3	**P90**	24	27.3	8	200	165	130	—	M10x14.5	4	536	91
A 60 2/3	**P100**	28	31.3	8	250	215	180	—	M12x16	4.5	546	95
A 60 2/3	**P112**	28	31.3	8	250	215	180	—	M12x16	4.5	546	95
A 60 2/3	**P132**	38	41.3	10	300	265	230	16	14	5	582.5	104
A 60 2/3	**P160**	42	45.3	12	350	300	250	23	18	5.5	633	121
A 60 2/3	**P180**	48	51.8	14	350	300	250	23	18	5.5	633	121
A 60 4	**P63**	11	12.8	4	140	115	95	—	M8x19	4	587	88
A 60 4	**P71**	14	16.3	5	160	130	110	—	M8x16	4.5	587	88
A 60 4	**P80**	19	21.8	6	200	165	130	—	M10x14.5	4	606.5	90
A 60 4	**P90**	24	27.3	8	200	165	130	—	M10x14.5	4	606.5	90
A 60 4	**P100**	28	31.3	8	250	215	180	—	M12x16	4.5	616.5	94
A 60 4	**P112**	28	31.3	8	250	215	180	—	M12x16	4.5	616.5	94

A 60...HS

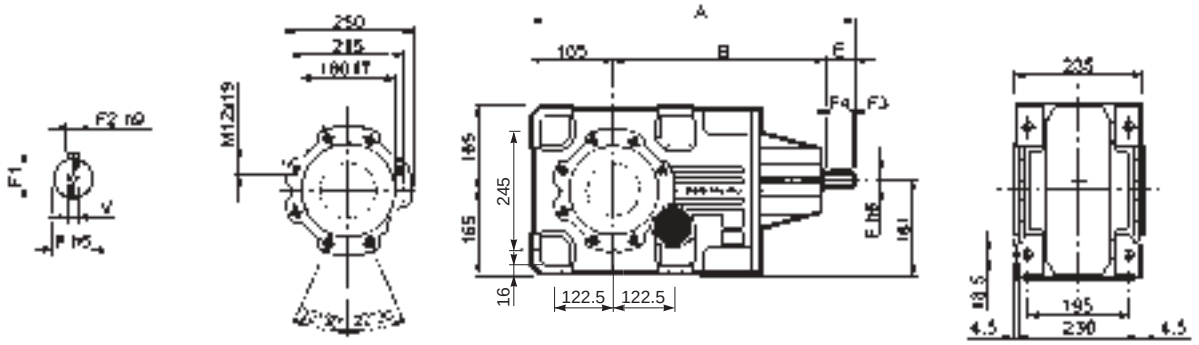

		A	B	E	F	F1	F2	F3	F4	V	
A 60 2		633	408	60	28	31	8	5.0	50	M10x22	106
A 60 3	**HS**	633	408	60	28	31	8	5.0	50	M10x22	106
A 60 4		676	461	50	24	27	8	2.5	45	M8x19	112

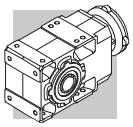

A 60...SK / SC

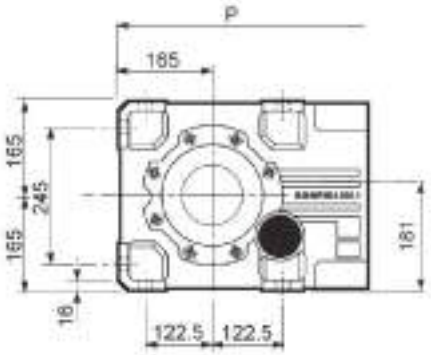

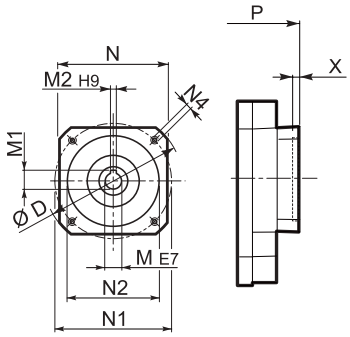

SK...

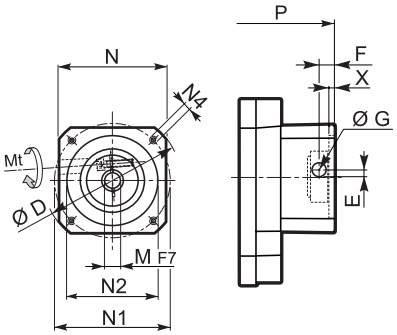

SC...

		D	M	M1	M2	N	N1	N2	N4	X	P 2/3x	P 4x	
A 60 4	**SK80B**	120	14	16.3	5	96	100	80	M6x12	4	—	606.5	89
A 60 2/3/4	**SK80C**	120	19	21.8	6	96	100	80	M6x12	4	536	606.5	93/93/92
A 60 2/3/4	**SK95A**	130	14	16.3	5	102	115	95	M8x12	4	536	606.5	93/93/92
A 60 2/3/4	**SK95B**	130	19	21.8	6	102	115	95	M8x12	4	536	606.5	93/93/92
A 60 2/3/4	**SK95C**	130	24	27.3	8	102	115	95	M8x12	4	536	606.5	93/93/92
A 60 2/3/4	**SK110A**	140	19	21.8	6	120	130	110	M8x12	5	536	606.5	93/93/92
A 60 2/3/4	**SK110B**	140	24	27.3	8	120	130	110	M8x12	5	536	606.5	93/93/92
A 60 2/3/4	**SK130A**	188	24	27.3	8	142	165	130	M10x20	5	536	606.5	97/97/103
A 60 2/3	**SK130B**	189	32	35.3	10	160	165	130	M10x20	5	582.5	—	102/102
A 60 2/3	**SK180A**	240	32	35.3	10	192	215	180	M12x19	5	582.5	—	102/102
A 60 2/3	**SK180B**	240	38	41.3	10	192	215	180	M12x19	5	582.5	—	102/102

			Mt [Nm]	D	E	F	G	M	N	N1	N2	N4	X	P 2/3x	P 3x	
A 60 4	**SC80B**	M6	15	120	15.5	14.5	17.75	14	96	100	80	M6x12	4	—	630	90
A 60 2/3/4	**SC80C**	M6	15	120	15.5	14.5	17.75	19	96	100	80	M6x12	4	559.5	630	94/94/93
A 60 2/3/4	**SC95A**	M6	15	130	16.5	15	17.75	14	102	115	95	M8x16	4	559.5	630	94/94/93
A 60 2/3/4	**SC95B**	M6	15	130	16.5	15	17.75	19	102	115	95	M8x16	4	559.5	630	94/94/93
A 60 2/3/4	**SC95C**	M6	15	130	16.5	15	17.75	24	102	115	95	M8x16	4	559.5	630	94/94/93
A 60 2/3/4	**SC110A**	M6	15	140	16.5	16	17.75	19	120	130	110	M8x16	5	559.5	630	95/95/93
A 60 2/3/4	**SC110B**	M6	15	140	16.5	16	17.75	24	120	130	110	M8x16	5	559.5	630	95/95/93
A 60 2/3/4	**SC130A**	M6	15	188	19	16	17.75	24	142	165	130	M10x20	5	559.5	630	96/96/104
A 60 2/3	**SC130B**	M8	36	189	20	17	17.75	32	160	165	130	M10x20	5	605.5	—	105/105
A 60 2/3	**SC180A**	M8	36	240	20	17.5	17.75	32	192	215	180	M12x24	5	609.5	—	105/105
A 60 2/3	**SC180B**	M8	36	240	20	17.5	17.75	38	192	215	180	M12x24	5	609.5	—	105/105

A 60...F...

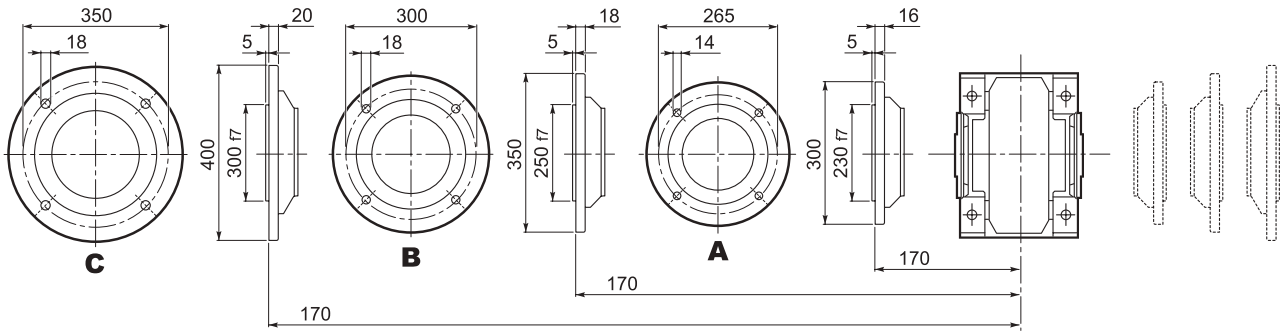

Bonfiglioli Riduttori

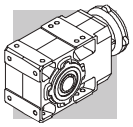

A 60

A 60...UR

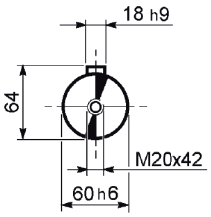

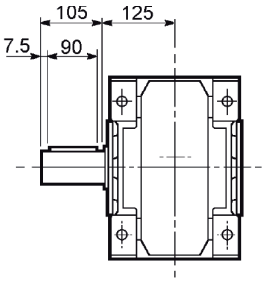

A 60...UD

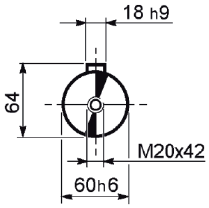

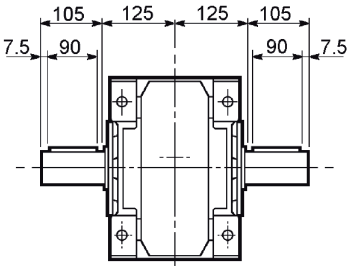

A 60...UH

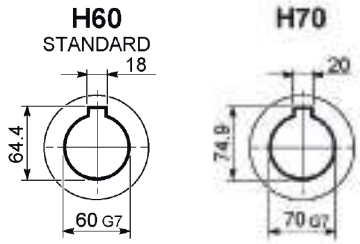

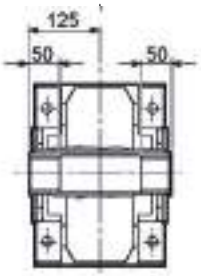

A 60...US

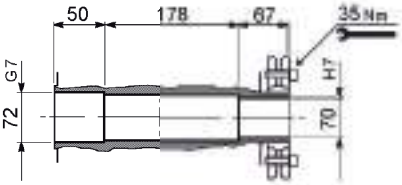

A 60...QF

	Ø
QF60	60
QF65	65
QF70	70

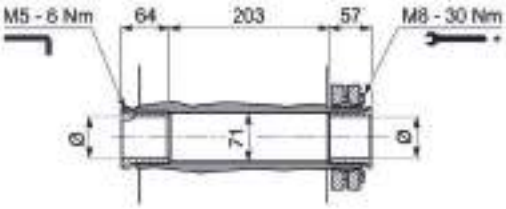

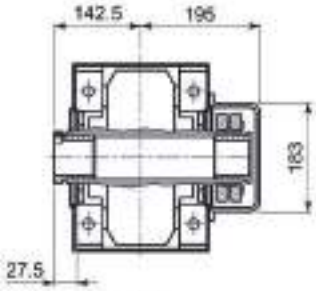

A 60...UV

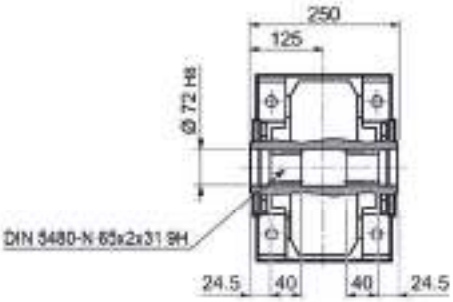

* Follow the MOUNTING INSTRUCTIONS supplied with the gearbox.

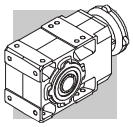

A 70...M

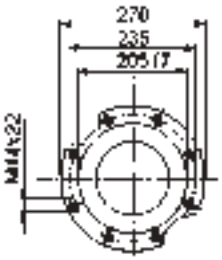

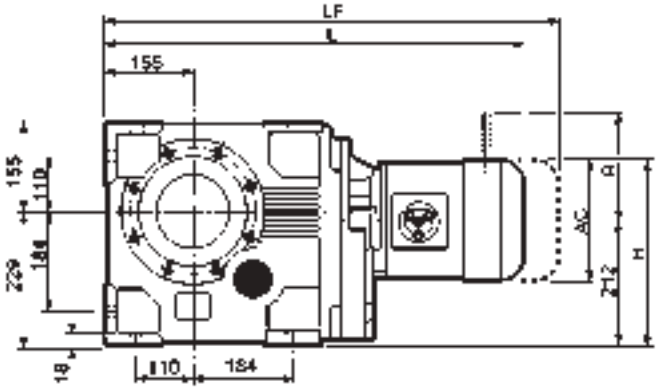

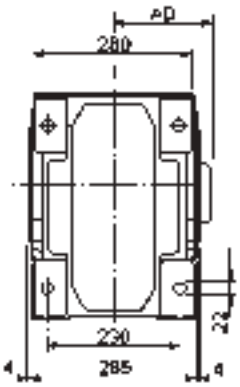

								M...FD M...FA		M...FD		M...FA	
			AC	H	L	AD		LF		R	AD	R	AD
A 70 3	**S2**	**M2S**	156	290	688.5	119	152	758.5	156	129	146	134	119
A 70 3	**S3**	**M3S**	195	309.5	731.5	142	157	827.5	164	160	158	160	142
A 70 3	**S3**	**M3L**	195	309.5	763.5	142	164	854.5	171	160	158	160	142
A 70 3	**S4**	**M4**	258	341	872.5	193	198	981.5	216	226	210	217	193
A 70 3	**S4**	**M4LC**	258	341	907.5	193	206	1006.5	224	226	210	217	193
A 70 3	**S5**	**M5S**	310	367	958	245	226	1098	256	266	245	247	245
A 70 3	**S5**	**M5L**	310	367	1002	245	242	1142	272	266	245	247	245
A 70 4	**S1**	**M1**	138	281	710.5	108	152	771.5	155	103	135	124	108
A 70 4	**S2**	**M2S**	156	290	739.5	119	156	809.5	160	129	146	134	119
A 70 4	**S3**	**M3S**	195	309.5	782.5	142	161	878.5	168	160	158	160	142
A 70 4	**S3**	**M3L**	195	309.5	814.5	142	168	905.5	175	160	158	160	142
A 70 4	**S4**	**M4**	258	341	922.5	193	202	1031.5	220	226	210	217	193
A 70 4	**S4**	**M4LC**	258	341	957.5	193	210	1056.5	228	226	210	217	193

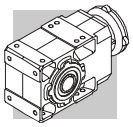

A 70...P (IEC)

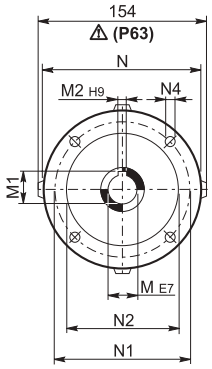

INPUT

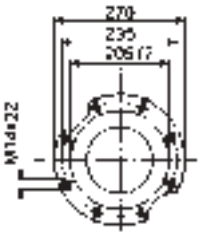

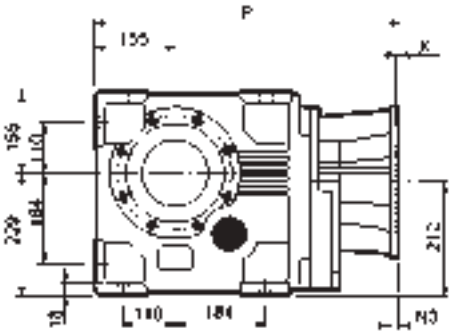

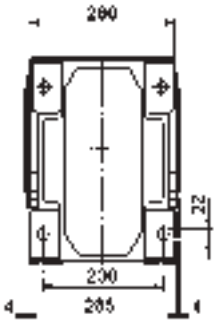

		M	M1	M2	N	N1	N2	N3	N4	X	P	
A 70 3	**P80**	19	21.8	6	200	165	130	—	M10x14.5	4	524	144
A 70 3	**P90**	24	27.3	8	200	165	130	—	M10x14.5	4	524	144
A 70 3	**P100**	28	31.3	8	250	215	180	—	M12x16	4.5	534	146
A 70 3	**P112**	28	31.3	8	250	215	180	—	M12x16	4.5	534	146
A 70 3	**P132**	38	41.3	10	300	265	230	16	14	5	570.5	154
A 70 3	**P160**	42	45.3	12	350	300	250	23	18	6	626	169
A 70 3	**P180**	48	51.8	14	350	300	250	23	18	6	626	169
A 70 3	**P200**	55	59.3	16	400	350	300	—	M16x25	7	651	179
A 70 4	**P63**	11	12.8	4	140	115	95	—	M8x19	4	555.5	146
A 70 4	**P71**	14	16.3	5	160	130	110	—	M8x16	4.5	555.5	146
A 70 4	**P80**	19	21.8	6	200	165	130	—	M10x14.5	4	575	147
A 70 4	**P90**	24	27.3	8	200	165	130	—	M10x14.5	4	575	147
A 70 4	**P100**	28	31.3	8	250	215	180	—	M12x16	4.5	585	148
A 70 4	**P112**	28	31.3	8	250	215	180	—	M12x16	4.5	585	148
A 70 4	**P132**	38	41.3	10	300	265	230	16	14	5	618.5	157

A 70...HS

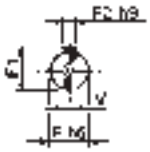

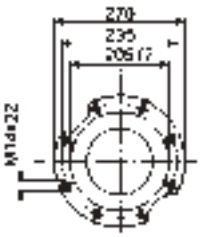

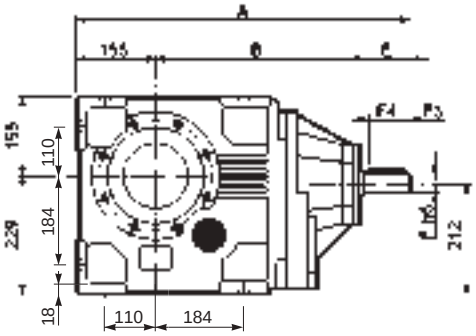

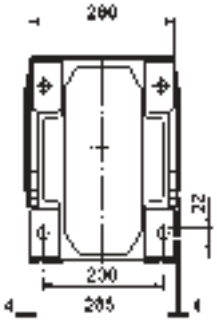

		A	B	E	F	F1	F2	F3	F4	V	
A 70 3	**HS**	708.5	443.5	110	42	45	12	10	90	M12x28	165
A 70 4		644.5	439.5	50	24	27	8	2.5	45	M8x19	149

A 70

A 70...UR

A 70...UD

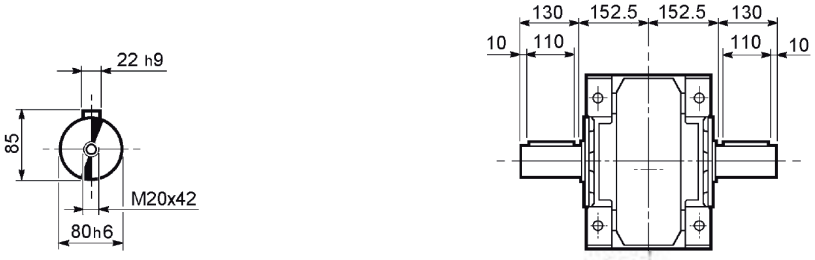

A 70...UH

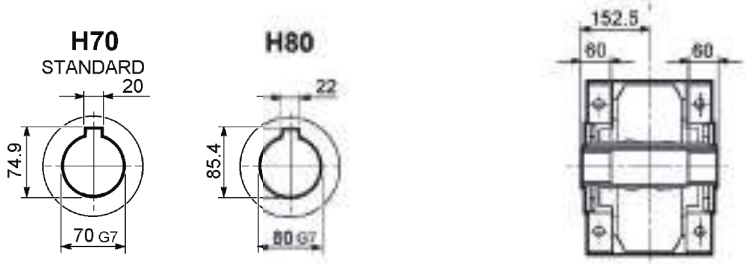

A 70...US

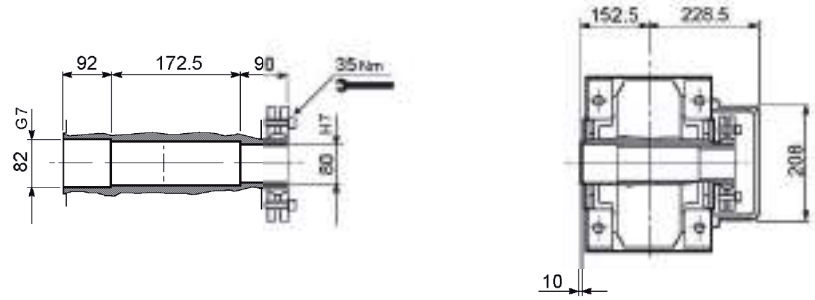

A 70...F...

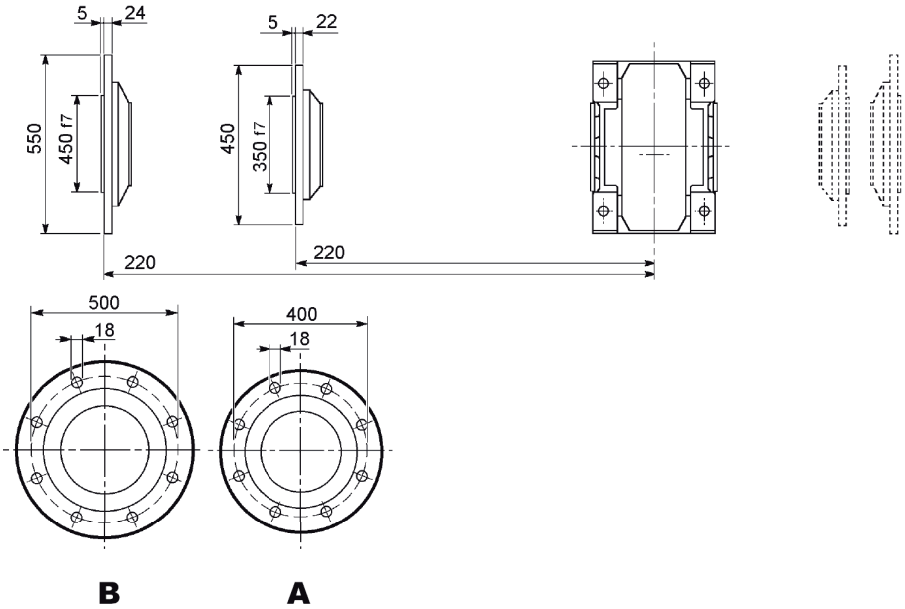

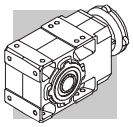

A 80...M

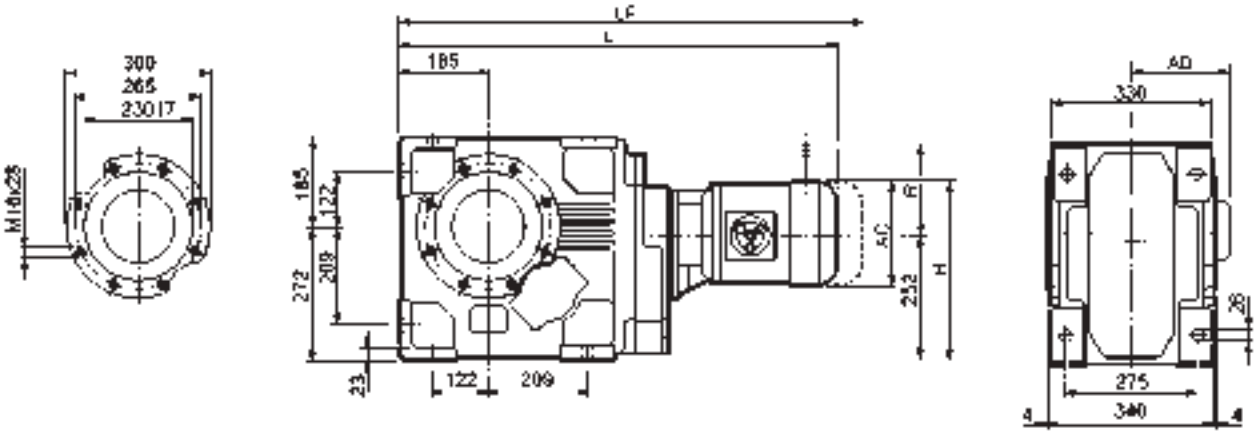

								M...FD M...FA		M...FD		M...FA	
			AC	H	L	AD		LF		R	AD	R	AD
A 80 3	**S3**	**M3S**	195	349.5	809.5	142	256	905.5	264	160	158	160	142
A 80 3	**S3**	**M3L**	195	349.5	841.5	142	264	932.5	271	160	158	160	142
A 80 3	**S4**	**M4**	258	381	949.5	193	298	1058.5	316	226	210	217	193
A 80 3	**S4**	**M4LC**	258	381	984.5	193	306	1083.5	324	226	210	217	193
A 80 3	**S5**	**M5S**	310	407	1036	245	326	1176	356	266	245	247	245
A 80 3	**S5**	**M5L**	310	407	1080	245	342	1220	372	266	245	247	245
A 80 4	**S1**	**M1**	138	321	800.5	108	246	861.5	249	103	135	124	108
A 80 4	**S2**	**M2S**	156	330	829.5	119	250	899.5	254	129	146	134	119
A 80 4	**S3**	**M3S**	195	349.5	872.5	142	255	968.5	262	160	158	160	142
A 80 4	**S3**	**M3L**	195	349.5	904.5	142	262	995.5	269	160	158	160	142
A 80 4	**S4**	**M4**	258	381	1012.5	193	296	1121.5	314	226	210	217	193
A 80 4	**S4**	**M4LC**	258	381	1047.5	193	304	1146.5	322	226	210	217	193

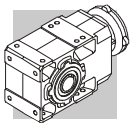

A 80...P(IEC)

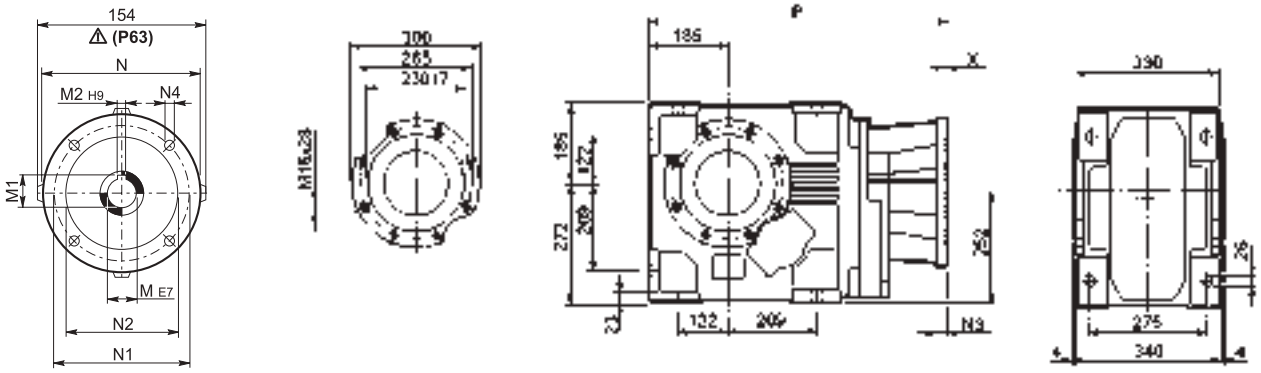

		M	M1	M2	N	N1	N2	N3	N4	X	P	
A 80 3	**P80**	19	21.8	6	200	165	130	—	M10x14.5	4	602	243
A 80 3	**P90**	24	27.3	8	200	165	130	—	M10x14.5	4	602	243
A 80 3	**P100**	28	31.3	8	250	215	180	—	M12x16	4.5	612	245
A 80 3	**P112**	28	31.3	8	250	215	180	—	M12x16	4.5	612	245
A 80 3	**P132**	38	41.3	10	300	265	230	16	14	5	648.5	253
A 80 3	**P160**	42	45.3	12	350	300	250	23	18	6	704	268
A 80 3	**P180**	48	51.8	14	350	300	250	23	18	6	704	268
A 80 3	**P200**	55	59.3	16	400	350	300	—	M16x25	7	729	279
A 80 3	**P225**	60	64.4	18	450	400	350	25	18	6	774.5	298
A 80 4	**P63**	11	12.8	4	140	115	95	—	M8x19	4	645.5	248
A 80 4	**P71**	14	16.3	5	160	130	110	—	M8x16	4.5	645.5	248
A 80 4	**P80**	19	21.8	6	200	165	130	—	M10x14.5	4	665	249
A 80 4	**P90**	24	27.3	8	200	165	130	—	M10x14.5	4	665	249
A 80 4	**P100**	28	31.3	8	250	215	180	—	M12x16	4.5	675	250
A 80 4	**P112**	28	31.3	8	250	215	180	—	M12x16	4.5	675	250
A 80 4	**P132**	38	41.3	10	300	265	230	16	M12x16	5	711.5	259

A 80...HS

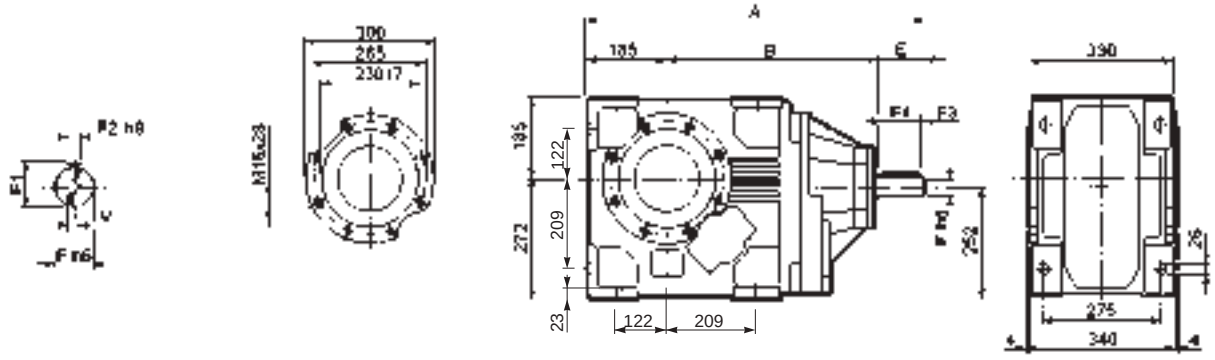

		A	B	E	F	F1	F2	F3	F4	V	
A 80 3	**HS**	786.5	491.5	110	42	45	12	10	90	M12x28	265
A 80 4		735	500	50	24	27	8	2.5	45	M8x19	250

A 80

A 80...UR

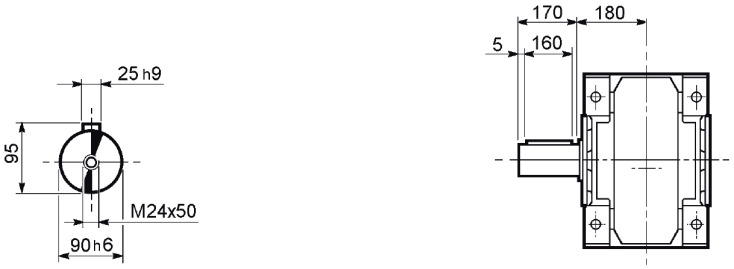

A 80...UD

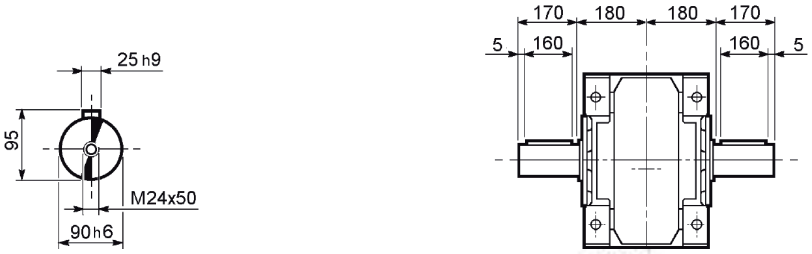

A 80...UH

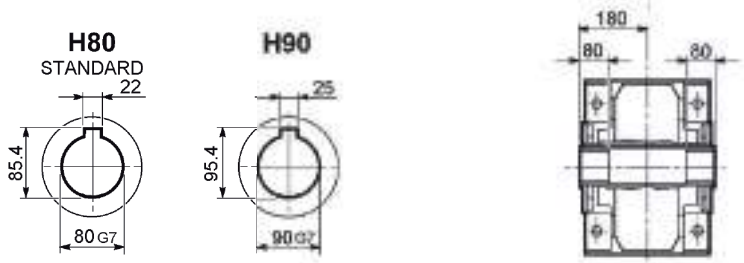

A 80...US

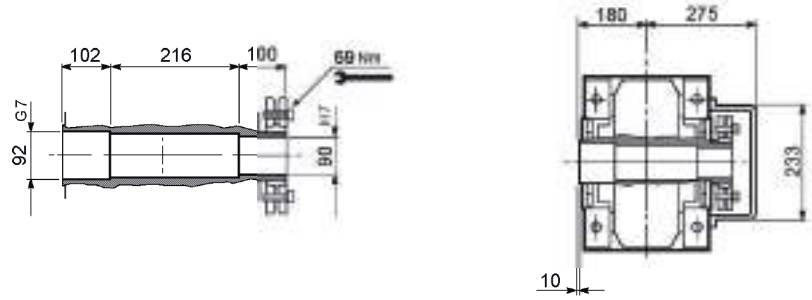

A 80...F...

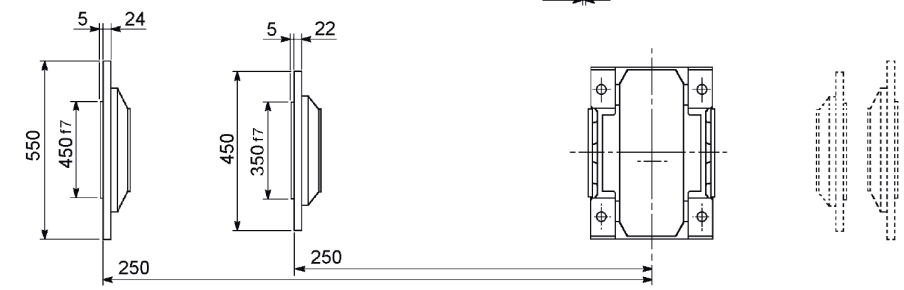

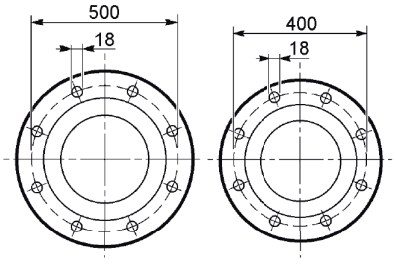

B **A**

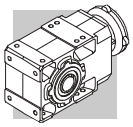

A 90...M

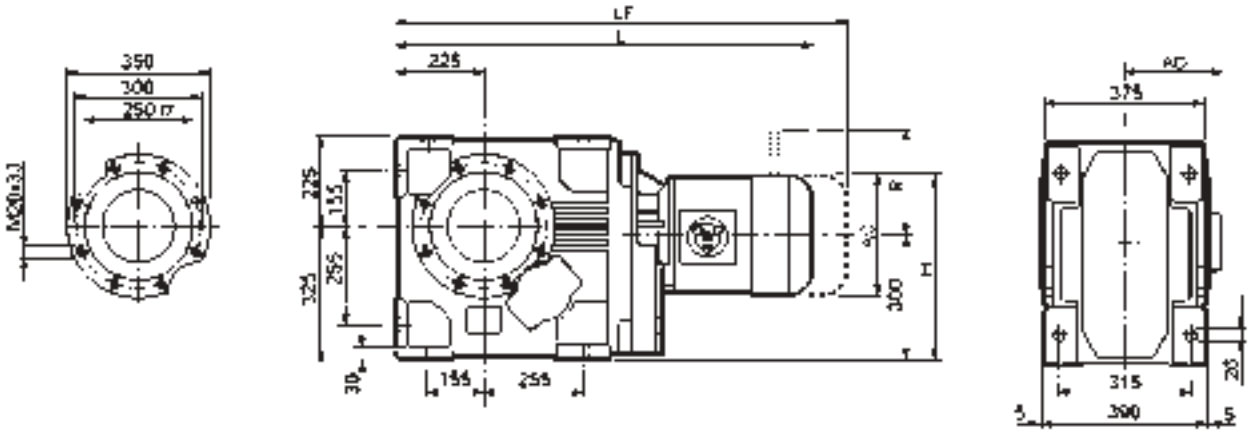

								M...FD M...FA		M...FD		M...FA	
			AC	H	L	AD		LF		R	AD	R	AD
A 90 3	**S3**	**M3S**	195	397.5	930.5	142	413	1026.5	420	160	158	160	142
A 90 3	**S3**	**M3L**	195	397.5	962.5	142	420	1053.5	427	160	158	160	142
A 90 3	**S4**	**M4**	258	429	1070.5	193	454	1179.5	472	226	210	217	193
A 90 3	**S4**	**M4LC**	258	429	1105.5	193	462	1204.5	480	226	210	217	193
A 90 3	**S5**	**M5S**	310	455	1157	245	482	1297	512	266	245	247	245
A 90 3	**S5**	**M5L**	310	455	1201	245	498	1341	528	266	245	247	245
A 90 4	**S1**	**M1**	138	369	941.5	108	412	1002.5	249	103	135	124	108
A 90 4	**S2**	**M2S**	156	378	970.5	119	422	1040.5	426	129	146	134	119
A 90 4	**S3**	**M3S**	195	397.5	1013.5	142	427	1109.5	434	160	158	160	142
A 90 4	**S3**	**M3L**	195	397.5	1045.5	142	434	1136.5	441	160	158	160	142
A 90 4	**S4**	**M4**	258	429	1153.5	193	468	1262.5	486	226	210	217	193
A 90 4	**S4**	**M4LC**	258	429	1188.5	193	476	1287.5	494	226	210	217	193

Bonfiglioli Riduttori

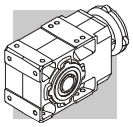

A 90...P (IEC)

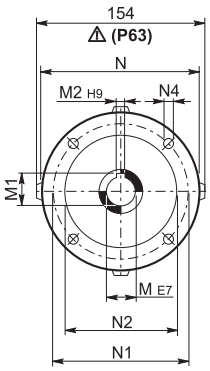

INPUT

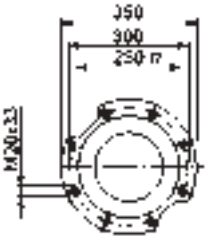

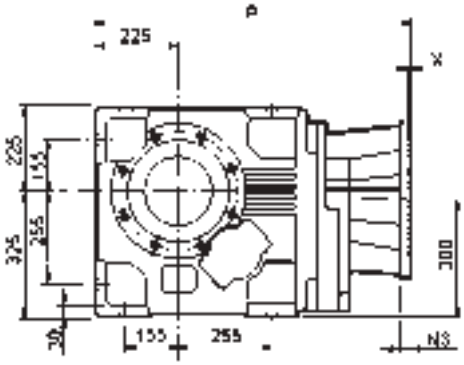

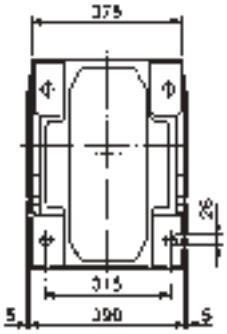

		M	M1	M2	N	N1	N2	N3	N4	X	P	
A 90 3	**P80**	19	21.8	6	200	165	130	—	M10x14.5	4	723	400
A 90 3	**P90**	24	27.3	8	200	165	130	—	M10x14.5	4	723	400
A 90 3	**P100**	28	31.3	8	250	215	180	—	M12x16	4.5	733	401
A 90 3	**P112**	28	31.3	8	250	215	180	—	M12x16	4.5	733	401
A 90 3	**P132**	38	41.3	10	300	265	230	16	14	5	769.5	409
A 90 3	**P160**	42	45.3	12	350	300	250	23	18	6	825	428
A 90 3	**P180**	48	51.8	14	350	300	250	23	18	6	825	429
A 90 3	**P200**	55	59.3	16	400	350	300	—	M16x25	7	850	436
A 90 3	**P225**	60	64.4	18	450	400	350	30	18	6	895.5	472
A 90 3	**P250**	65	69.4	18	550	500	450	30	18	6	925.5	475
A 90 4	**P63**	11	12.8	4	140	115	95	—	M8x19	4	786.5	411
A 90 4	**P71**	14	16.3	5	160	130	110	—	M8x16	4.5	786.5	412
A 90 4	**P80**	19	21.8	6	200	165	130	—	M10x14.5	4	806	413
A 90 4	**P90**	24	27.3	8	200	165	130	—	M10x14.5	4	806	413
A 90 4	**P100**	28	31.3	8	250	215	180	—	M12x16	4.5	816	415
A 90 4	**P112**	28	31.3	8	250	215	180	—	M12x16	4.5	816	415
A 90 4	**P132**	38	41.3	10	300	265	230	16	14	5	852.5	423
A 90 4	**P160**	42	45.3	12	350	300	250	23	18	5.5	903	434
A 90 4	**P180**	48	51.8	14	350	300	250	23	18	5.5	903	434

A 90...HS

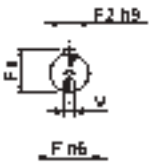

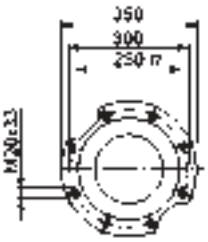

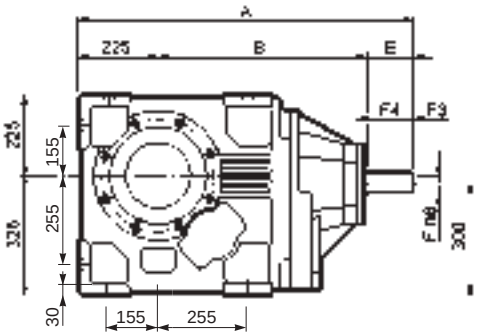

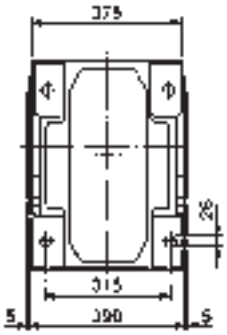

		A	B	E	F	F1	F2	F3	F4	V	
A 90 3	**HS**	1009	644	140	60	64	18	10	120	M16x36	465
A 90 4		875.5	600.5	50	24	27	8	2.5	45	M8x19	415

A 90

A 90...UR

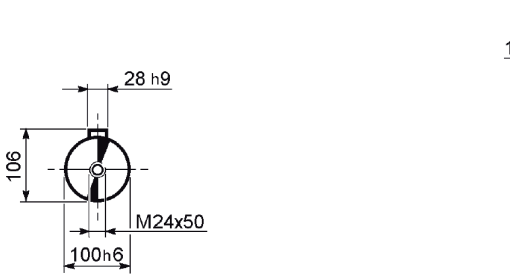

A 90...UD

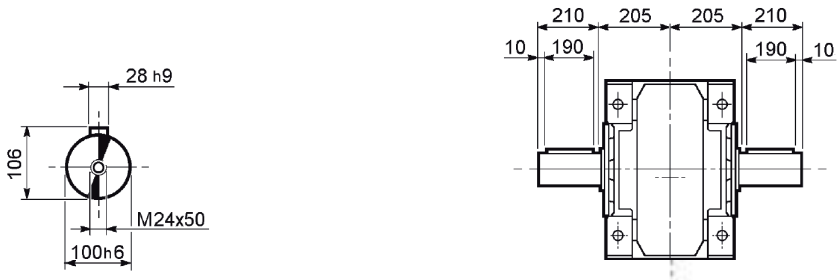

A 90...UH

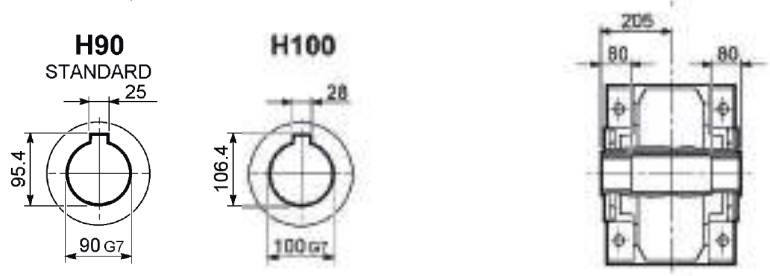

A 90...US

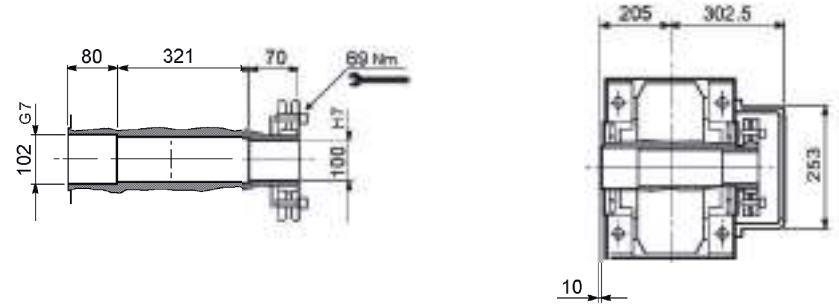

A 90...F...

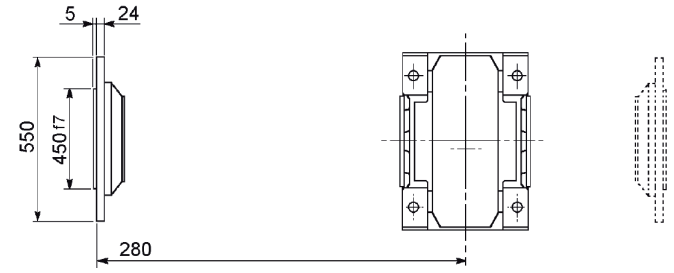

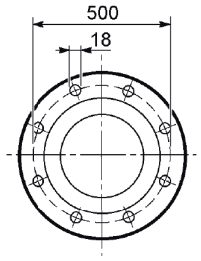

A

44.1 Safety cover

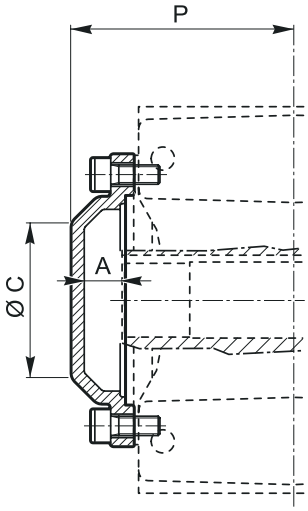

	A	Ø C	P
A 05	17.5	36	73.5
A 10	20.5	60	84.5
A 20	20	75	94
A 30	20	75	104
A 35	19.5	80	114
A 41	21	110	120
A 50	26	100	148.5
A 55	27	100	149
A 60	25	100	158
A 70	33.5	120	193.5
A 80	38	140	228
A 90	43	152	258

44.2 Torque arm

Torque arm comes complete with fastening bolts.

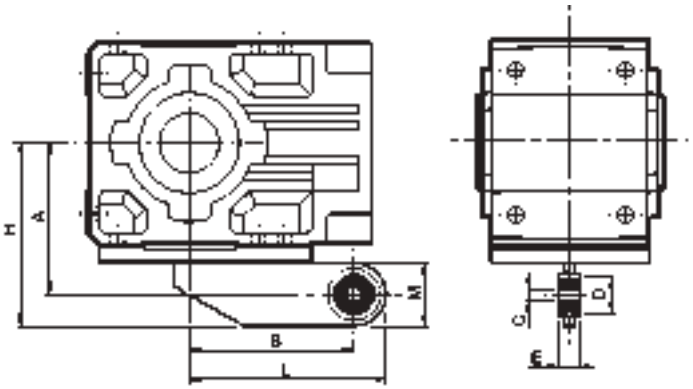

	A	B	C	D	E	H	L	M
A 05	90.5	80	10	30	20	115.5	105	50
A 10	108	118	10	30	20	138	148	60
A 20	118	137	10	30	20	148	167	60
A 30	135	150	20	40	25	170	185	70
A 35	145	165	20	40	25	180	200	70
A 41	157	200	20	40	25	192	235	70
A 50	200	250	32	56	40	245	295	90
A 55	200	250	32	56	40	245	295	90
A 60	225	300	32	56	40	270	345	90

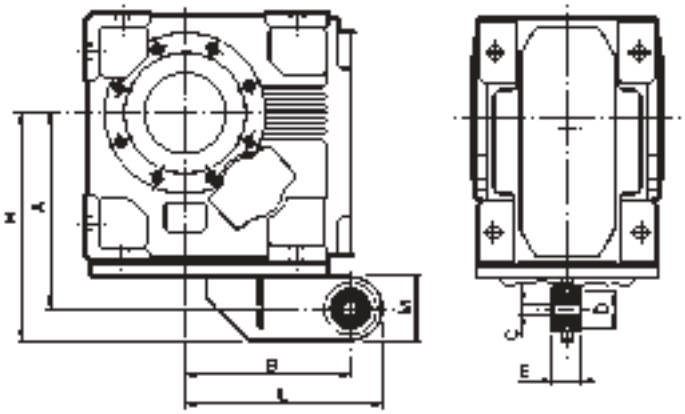

	A	B	C	D	E	H	L	M
A 70	289	250	32	56	40	334	295	90
A 80	357	300	42	78	60	422	365	130
A 90	410	350	42	78	60	475	415	130

Bonfiglioli Riduttori

45 CUSTOMER' SHAFT

Make the driven shaft to be coupled to the gear unit's output shaft from a good quality steel, respecting the dimensions given in the table.

A device such as that illustrated below should also be installed to secure the shaft axially. Take care to verify and dimension the various components to suit the needs of the application.

UH_

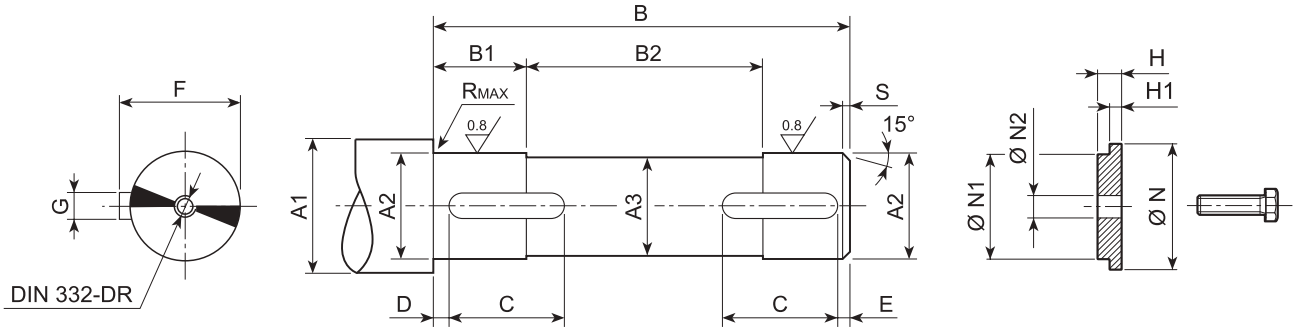

	A1	A2	A3	B	B1	B2	C	D	E	F	G	R	S	UNI 6604	N	N1	N2	H	H1	UNI 5739
A05 UH25	≥ 30	25 h7	24	102	21	62	20	2	2	28	8 h9	0.5	1.5	8x7x20 A	35	25 d9	9	7	5.5	M8x25
A10 UH30	≥ 35	30 h7	29	118	16	87	20	2	2	33	8 h9	0.5	1.5	8x7x20 A	35	30 d9	11	8.5	7	M10x30
A10 UH25	≥ 30	25 h7	24	118	16	87	20	2	2	28	8 h9	0.5	1.5	8x7x20 A	30÷35	25 d9	9	7	5.5	M8x25
A20 UH35	≥ 42	35 h7	34	138	20	98	20	2	2	38	10 h9	0.5	1.5	10x8x20 A	42	35 d9	11	8.5	7	M10x30
A20 UH30	≥ 35	30 h7	29	138	20	98	25	2	2	33	8 h9	0.5	1.5	8x7x25 A	35÷42	30 d9	11	8.5	7	M10x30
A30 UH40	≥ 47	40 h7	39	158	23	112	30	2	2	43	12 h9	0.5	1.5	12x8x30 A	47	40 d9	14	8.5	7	M12x35
A30 UH35	≥ 42	35 h7	34	158	23	112	30	2	2	38	10 h9	0.5	1.5	10x8x30 A	42÷47	35 d9	11	8.5	7	M10x30
A35 UH40	≥ 47	40 h7	39	175	33	109	40	2	2	43	12 h9	1	1.5	12x8x40 A	47	40 d9	14	8.5	7	M12x35
A35 UH35	≥ 42	35 h7	34	175	33	109	40	2	2	38	10 h9	1	1.5	10x8x40 A	42÷47	35 d9	11	8.5	7	M10x30
A41 UH45	≥ 52	45 h7	44	184	28	128	45	2.5	2.5	48.5	14 h9	1	2	14x9x45 A	52	45 d9	14	8.5	7	M12x35
A41 UH40	≥ 47	40 h7	39	184	28	128	50	2.5	2.5	43	12 h9	1	2	12x8x50 A	47÷52	40 d9	14	8.5	7	M12x35
A50 UH55	≥ 63	55 h7	54	226	37.5	151	55	2.5	2.5	59	16 h9	1	2	16x10x55 A	63	55 d9	22	10	8	M20x50
A50 UH50	≥ 57	50 h7	49	226	37.5	151	65	2.5	2.5	53.5	14 h9	1	2	14x9x65 A	57÷63	50 d9	18	10	8	M16x45
A55 UH60	≥ 70	60 h7	59	226	37.5	151	65	2.5	2.5	64	18 h9	2	2	18x11x65 A	70	60 d9	22	10	8	M20x50
A55 UH50	≥ 60	50 h7	49	226	37.5	151	75	2.5	2.5	53.5	14 h9	2	2	14x9x75 A	60÷70	50 d9	18	10	8	M16x45
A60 UH70	≥ 78	70 h7	69	248	48	152	70	2.5	2.5	74.5	20 h9	2.5	2	20x12x70 A	78	70 d9	22	10	8.5	M20x50
A60 UH60	≥ 68	60 h7	59	248	48	152	80	2.5	2.5	64	18 h9	2.5	2	18x11x80 A	68÷78	60 d9	22	10	8.5	M20x50
A70 UH80	v89	80 h7	79	303	58	187	90	3	3	85	22 h9	2.5	2.5	22x14x90 A	89	80 d9	22	10	8.5	M20x50
A70 UH70	≥ 78	70 h7	69	303	58	187	110	3	3	74.5	20 h9	2.5	2.5	20x12x110 A	78÷89	70 d9	22	10	8.5	M20x50
A80 UH90	≥ 99	90 h7	89	358	78	202	120	3	3	95	25 h9	2.5	2.5	25x14x120 A	99	90 d9	26	22	20.5	M24x70
A80 UH80	≥ 89	80 h7	79	358	78	202	130	3	3	85	22 h9	2.5	2.5	22x14x130 A	89÷99	80 d9	22	10	8.5	M20x50
A90 UH100	≥ 111	100 h7	99	408	78	252	160	3	3	106	28 h9	2.5	2.5	28x16x160 A	111	100 d9	26	22	20.5	M24x70
A90 UH90	≥ 99	90 h7	89	408	78	252	190	3	3	95	25 h9	2.5	2.5	25x14x190 A	99÷111	90 d9	26	22	20.5	M24x70

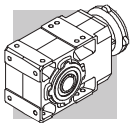

US

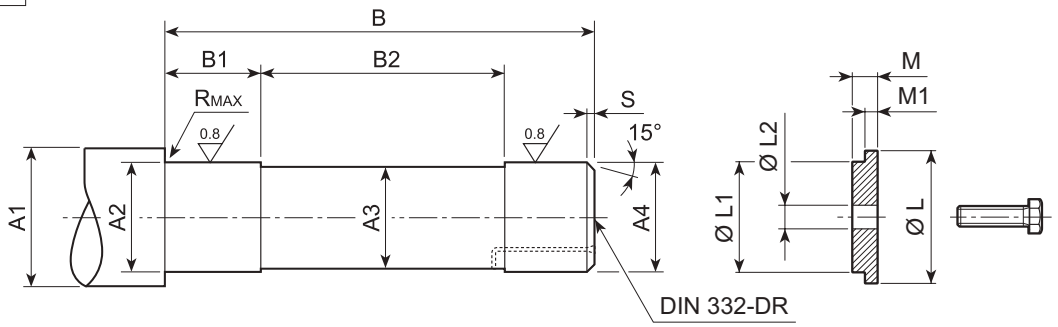

	A1	A2	A3	A4	B	B1	B2	R	S	L	L1	L2	M	M1	UNI 5739
A 05	≥ 35	27 h7	24	25 h6	129.5	32	63.5	0.5	1.5	29.5	25 d9	11	8.5	7	M10x30
A 10	≥ 42	32 h7	29	30 h6	147.5	34	77.5	0.5	1.5	35.5	30 d9	11	8.5	7	M10x30
A 20	≥ 48	37 h7	34	35 h6	170	40	89	0.5	1.5	43	35 d9	14	8.5	7	M12x35
A 30	≥ 54	42 h7	39	40 h6	191.5	48	95.5	0.5	1.5	49	40 d9	18	10	8.5	M16x45
A 35	≥ 54	42 h7	39	40 h6	208.5	48	112.5	0.5	1.5	49	40 d9	18	10	8.5	M16x45
A 41	≥ 60	47 h7	44	45 h6	222	53	117	1	2	54	45 d9	18	10	8.5	M16x45
A 50	≥ 72	57 h7	54	55 g6	264	46	156	1	2	72	55 d9	22	10	8.5	M20x50
A 55	≥ 72	62 h7	59	60 g6	266	46	158	2.5	2	72	60 d9	22	10	8.5	M20x50
A 60	≥ 90	72 h7	69	70 g6	293	48	178	2.5	2.5	85	70 d9	22	10	8.5	M20x50
A 70	≥ 104	82 h7	79	80 g6	352.5	90	172.5	2.5	2.5	95	80 d9	22	10	8.5	M20x50
A 80	≥ 114	92 h7	89	90 g6	416	100	216	2.5	2.5	105	90 d9	26	22	20.5	M24x70
A 90	≥ 126	102 h7	99	100 g6	469	78	321	2.5	2.5	120	100 d9	26	22	20.5	M24x70

UV

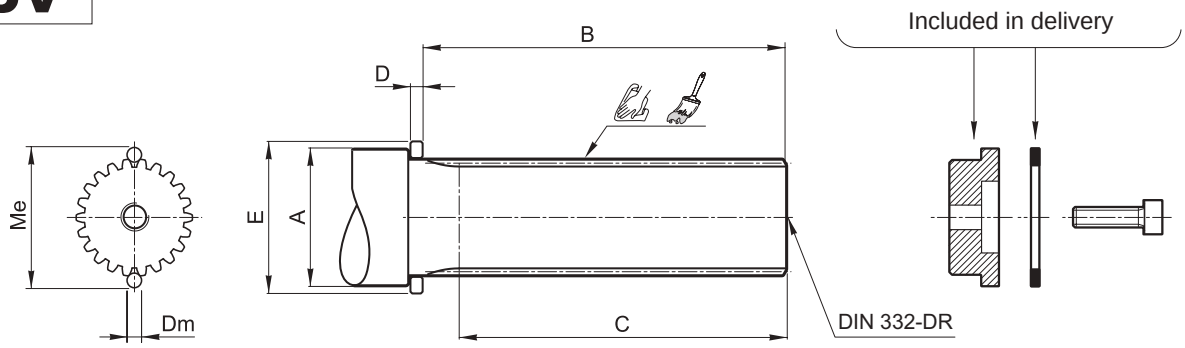

	DIN 5480	Me	Dm	A	B	C	D	E	ISO 4762
A 20	30x1.25x22	33.04 +0/-0.04	2.75	≥ 40	111.5	≥ 95	7	45	M10x35
A 30	35x2x16	38.93 +0/-0.04	4	≥ 45	130.5	≥ 112	7	50	M12x40
A 35	35x2x16	38.93 +0/-0.04	4	≥ 45	147.5	≥ 129	7	50	M12x40
A 41	45x2x21	48.86 +0/-0.04	4	≥ 55	155.5	≥ 136	7	60	M16x45
A 50	50x2x24	54.14 +0/-0.05	4	≥ 60	196	≥ 175	7	65	M16x45
A 55	50x2x24	54.14 +0/-0.05	4	≥ 60	196	≥ 175	7	65	M16x45
A 60	65x2x31	68.97 +0 /-0.05	4	≥ 75	213.5	≥ 191	7	80	M20x55

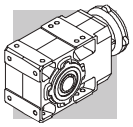

QF

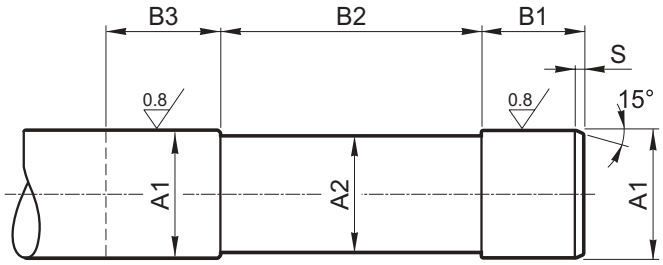

		A1	A2	B1	B2	B3	S
A 10	**QF25**	25 h6	24	41	95	≥ 50	1.5
	QF30	30 h6	29				
A 20	**QF25**	25 h6	24	41	115	≥ 50	1.5
	QF30	30 h6	29				
A 30	**QF35**	35 h6	34	45	130	≥ 54	1.5
	QF40	40 h6	39				
A 35	**QF35**	35 h6	34	45	146.5	≥ 54	1.5
	QF40	40 h6	39				
A 41	**QF40**	40 h6	39	47	151.5	≥ 56	2
	QF45	45 h6	44				
A 50	**QF50**	50 h6	49	48	197	≥ 57	2
	QF55	55 h6	54				
A 55	**QF55**	55 h6	54	50	190	≥ 59	2
	QF60	60 h6	59				
A 60	**QF60**	60 h6	59	57	203	≥ 66	2.5
	QF65	65 h6	64				
	QF70	70 h6	69				

46 INTRODUCTION TO THE ATEX DIRECTIVES

46.1 Explosive atmosphere

An **explosive atmosphere** for the purposes of Directive 2014/34/EU is defined as a mixture:

a. of **flammable substances**, in the form of gases, vapours, mists or dusts;
b. with **air**;
c. under atmospheric conditions;
d. in which, after ignition, the combustion spreads to the entire unburned mixture (it has to be noted that sometimes, mainly with dust, not always the whole quantity of the combustible material is consumed by the combustion).

An atmosphere, which could become explosive due to local and/or operational conditions is called a **potentially explosive atmosphere**.
It is only in this kind of potentially explosive atmosphere which products falling under the Directive 2014/34/EU are designed for.

46.2 European harmonised atex standards

Directive 2014/34/EU stipulates the minimum safety requirements for products intended for use in explosion risk areas within the member countries of the European Union. The directive also assigns such equipment to **categories,** which are defined by the directive itself.

The following table describes the **zones** into which the user of a plant, in which an explosive atmosphere may occur,is required to divide the equipment application areas.

(C 1)

Zones		Formation frequency of a potentially xplosive atmosphere	Type of danger
Gaseous atmosphere G	Dusty atmosphere D		
0	20	Present continuously or for long periods	Permanent
1	21	Likely to occur in normal operation occasionally	Potential
2	22	Not likely to occur in normal operation but if it does occur will persist for short period only	Minimal

BONFIGLIOLI RIDUTTORI gear units selected in this catalogue are suitable for installation in zones 1, 21.

Gearbox can also be supplied for installation in zones 2, 22. Contact our Technical Service for further details.

As from 20 April 2016 the ATEX directive 2014/34/EU come into force throughout the entire European Union, and replace existing conflicting national and European laws on explosive atmospheres and the previous directive 94/9/EC.
It should be emphasised that, for the first time, the directives also govern mechanical, hydraulic and pneumatic equipment, and not only electrical equipment as has been the case so far.
With regard to the Machinery Directive 2006/42/EC it should be noted that directive 2014/34/EU is a set of extremely specific requirements dedicated to the dangers deriving from potentially explosive atmospheres, whereas the Machinery Directive contains only very general explosion safety requirements (Annex I).
Consequently, as regards protection against explosion in potentially explosive atmospheres, Directive 2014/34/EU takes precedence over the Machinery Directive.
The requirements of the Machinery Directive apply to all other risks regarding machinery.

46.3 Levels of protection for the various categories of equipment

The various categories of equipment must be able to operate in conformity witht he Manufacturer's operational specifications, at certain defined levels of protection.
The availability of BONFIGLIOLI RIDUTTORI products is highlighted in grey.

(C 2)

Protection level	Category		Type of protection	Operating conditions
	Group I	Group II		
Very high	M1		Two independent means of protection or safety capable of operating even when two independent faults occur.	The equipment remains powered and operational even in the presence of an explosive atmosphere.
Very high		**1**	Two independent means of protection or safety capable of operating even when two independent faults occur.	The equipment remains powered and operational in zones 0, 1, 2 (G) and/or zones 20, 21, 22 (D).
High	M2		Protection suitable for normal operation and heavy duty conditions.	Power to the equipment is shut off in the presence of a potentially explosive atmosphere.
High		**2**	Protection suitable for normal operation and frequent faults or equipment in which malfunction is normal.	The equipment remains powered and operational in zones 1, 2 (G) and/or zones 21, 22 (D).
Normal		**3**	Protection suitable for normal operation.	The equipment remains powered and operational in zones 2 (G) and/or zones 22 (D).

46.4 Definition of groups

Group I Applies to equipment intended for use underground in parts of mines and those parts of surface installations of such mines, liable to been dangered by fire damp and/or combustible dust.

Group II Applies to equipment intended for use in other places liable to been dangered by explosive atmospheres.

BONFIGLIOLI RIDUTTORI products may not therefore be installed in mines, classified in **Group I** and in **Group II**, category 1.

To summarise, the classification of equipment in to groups, categories and zones is illustrated in the table below, where by the availability of BONFIGLIOLI RIDUTTORI products is highlighted in grey.

(C 3)

Group	**I** **Mines, firedamp**		**II** **Other potentially explosive areas (gas, dust)**					
Category	M1	M2	1		2		3	
Atmosphere[1]			G	D	G	D	G	D
Zone			0	20	1	21	2	22
Type of protection gear unit					c, k	c, k		

[1] **G** = gas **D** = **dust**

This catalogue describes BONFIGLIOLI RIDUTTORI **gear units**, intended for use in potentially explosive atmospheres, with limitation to categorie 2.

The products described here in conform to the minimum safety requirements of European Directive 2014/34/EU, which is part of the directives known as ATEX (ATmosphères EXplosibles).

46.5 Declaration of conformity

The Declaration of Conformity, is the document which attests to the conformity of the product to Directive 2014/34/EU.
The validity of the Declaration is bound to observance of the instructions given in the User, Installation and Service Manual for safe use of the product throughout its service life.
This can be downloaded from www.bonfiglioli.com where the manual is available in PDF format in a number of languages.
The instructions regarding ambient conditions are of particular importance inasmuch as failure to observe them during operation of the product renders the certificate null and void. In case of doubt regarding the validity of the certificate of conformity, contact the BONFIGLIOLI RIDUTTORI technical department.

47 SELECTION

Some fundamental data are necessary to assist the correct selection of a gearbox or gear unit with IEC motor interface. The table below briefly sums up this information.
To simplify selection, a copy of this form, duly filled in, can be forwarded to our Technical Service which will select the most suitable drive unit for your application.

(C 4)

Bonfiglioli power, control and green solutions	TECHNICAL DATA REQUIRED FOR THE SELECTION OF GEARBOXS A SERIES	Nr:	
		Date:	
		Rev_	Date:

		A)	*GENERAL DATA*				
#	1		Company / Customer				
#	2		Contact				
#	3		Branch / Distributor				
#	4		Order quantity				
	5		Delivery time				
		B_1)	*ELECTRIC MOTOR*				
	6		Motor Type				
#	7	P_{n1}	Rated motor Power		[kW]		
#	8	P_{r1}	Motor power demand		[kW]		
	9	n_1	Input speed		[min^{-1}]		
	10		No. of Poles				
		C)	*GEARBOX*				
#	11		Gearbox configuration				
#	12	i	Gear ratio				
#	13	n_1	Input speed		[min^{-1}]		
#	14	M_{r2}	Output torque demand		[Nm]		
#	15	f_S	Service factor demand				
	16		Rotation of the output shaft [frontal view]:	**CW**	**CCW**		
#	17	L_{10H}	Bearings lifetime		[h]		
	18		Gears lifetime		[h]		
	19	SF_{min}	Safety for tooth root stress		standard reference (ISO preferred)		
	20	SH_{min}	Safety for flank pressure		standard reference (ISO preferred)		
		D)	*ADDITIONAL LOADS*				
	21	R_{c2}	Radial load on output shaft		[N]	Orientation [°]	
	22	x_2	Load application distance from shaft shoulder		[mm]		
	23	R_{c1}	Radial load on input shaft		[N]	Orientation [°]	
	24	x_1	Load application distance from shaft shoulder		[mm]		
	25	A_{n2}	Thrust load on output shaft (+ / -)		[N]	+ = push	
	26	A_{n1}	Thrust load on input shaft (+ / -)		[N]	- = pull	
		E)	*APPLICATION*				
#	27		Type of application				
	28		Duty cycle	Time phase	Gearbox output torque	Gearbox output speed	
				%	[Nm]	[min^{-1}]	
				,,,,	,,,,		
				,,,,	,,,,		
				,,,,	,,,,		
	29		Notes about Duty Cycle:				
	30		Rating according FEM class	T-	L-	M-	
	31		Degree of intermittence		[%]		
	32	t_a	Ambient temperature range		[°C]		
#	33		Altitude a.s.l.		[m]		
	34		Type of ambient	small indoor space	large indoor space	outdoor	
		F)	*NOTES*				
	35		Notes and additional Customer requirements:				

Mandatory for the selection

48 INSTALLATION, USE AND MAINTENANCE

All the instructions for installation, use and maintenance of the product are given in the unit's Manual. This can be downloaded from www.bonfiglioli.com where the manual is available in PDF format in a number of languages.
This document must be kept in a suitable place, in the vicinity of the installed gear unit, as a reference for all persons authorised to work with or on the product throughout its service life.

49 CONSTRUCTION OF ATEX-SPECIFIED EQUIPMENT

• Equipped with service plugs for periodic lubricant level checks.
• Equipped with vent caps with anti-intrusion valve.
• Factory-charged with lubricant (synthetic oil), depending on the mounting position specified in the order.
• Fluoro elastomer seal rings as standard.
• No plastic component parts..
• Nameplate indication of the product category and type of protection.
• Components operable at above the operating temperature.
• Temperature indicator supplied along with each unit.

(C 5)

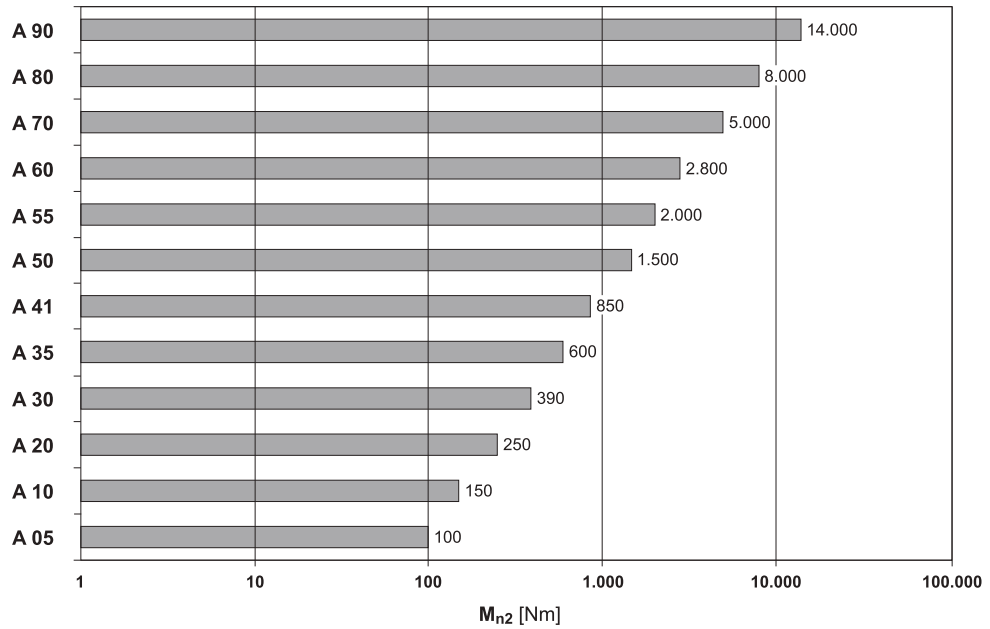

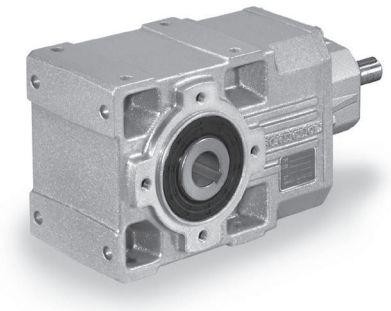

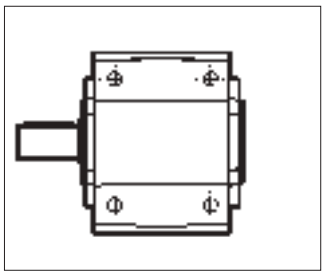

UR

Single extension output shaft

A 10 ... A 90

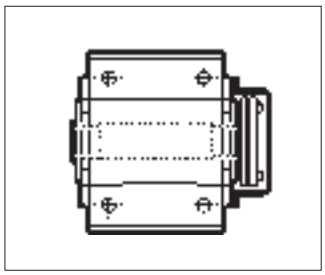

US

Hollow output shaft and shrink disc

A 05 ... A 90

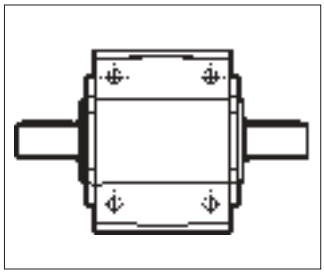

UD

Double extended output shaft

A 10 ... A 90

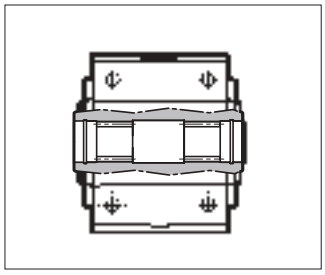

UV

Splined hollow shaft DIN 5480

A 20 ... A 60

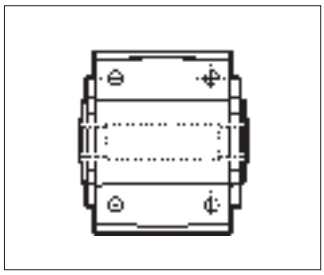

UH

Hollow output shaft and keyway

A 05 ... A 90

Basic versions with bolted flange

The sketches show the applicable flanges to the basic versions and their positions, designated with either ① or ② .

UR F1... UR F2...

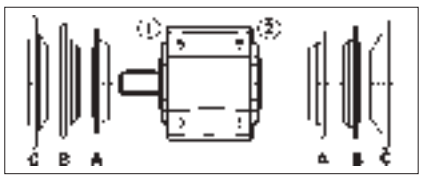

UD F1... UD F2...

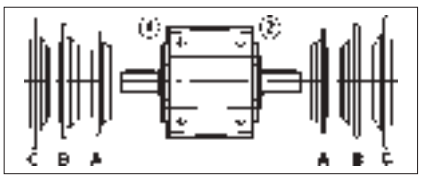

UH... F1... UH... F2...

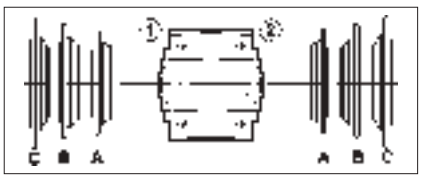

US F1... US F2...

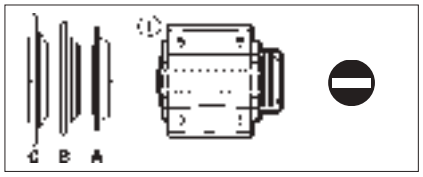

UV F1... UV F2...

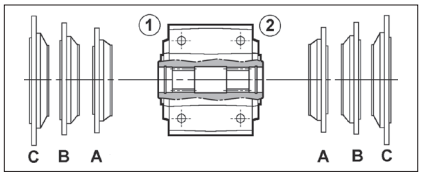

51 DESIGNATION

GEAR UNIT

A 50 3 UH50 F1A 99.5 P90 B3 EX

OPTIONS

MOUNTING POSITION
B3 (Standard), **B6**, **B7**, **B8**, **VA**, **VB**

INPUT CONFIGURATION

IEC_ **P63 ... P250**

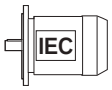

HS

GEAR RATIO

OUTPUT FLANGE SIZE AND POSITION
(specify only if requested)

F = Flanged version
1, **2** = Flange position
A, **B**, **C** = Flange size

VERSION

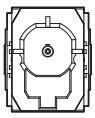

UH_

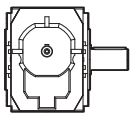

UR
(A 10...A 90)

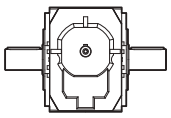

UD
(A 10...A 90)

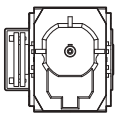

US
(A 05...A 90)

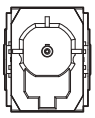

UV
(A 20...A 60)

A 05	A 10	A 20	A 30	A 35	A 41	A 50	A 55	A 60	A 70	A 80	A 90
UH25	**UH25**	**UH30**	**UH35**	**UH40**	**UH45**	**UH50**	**UH60**	**UH60**	**UH70**	**UH80**	**UH90**
—	UH30	UH35	UH40	UH35	UH40	UH55	UH50	UH70	UH80	UH90	UH100

REDUCTIONS
2 (A 05...A 60), **3** (A 20...A 90), **4** (A 50...A 90)

GEAR FRAME SIZE
05, **10**, **20**, **30**, **35**, **41**, **50**, **55**, **60**, **70**, **80**, **90**

TYPE: **A** = Helical bevel gear units

Gearbox options

EX

The gear unit can be installed in zones 1 and 21 (categories 2G and 2D).
The temperature class is T4 (max. 135 °C).

CERTIFICATES

AC - Certificate of compliance

The document certifies the compliance of the product with the purchase order and the construction in conformity with the applicable procedures of the Bonfiglioli Quality System.

CC - Inspection certificate

The document entails checking on order compliance, the visual inspection of external conditions and of mating dimensions. Checking on main functional parameters in unloaded conditions is also performed along with oil seal proofing, both in static and in running conditions. Units inspected are sampled within the shipping batch and marked individually.

52 OTHERS INFORMATION ABOUT GEARBOX AND GEARMOTOR

Mounting positions, technical data, motor availability,moments of inertia and dimensions of **A-EX (Atex)** series don’t change among equivalent **A** product series. All of these information can be obtained in the related chapters of this catalogue.

53 DESIGN FEATURES

The main design characteristics are:
- modularity
- space effectiveness
- universal mounting
- high efficiency
- quite operation
- gears in hardened and case-hardened steel
- bare aluminium housing for sizes 10, 20 and 25,
  high strength painted cast-iron housings for larger frame sizes.

(D 44)

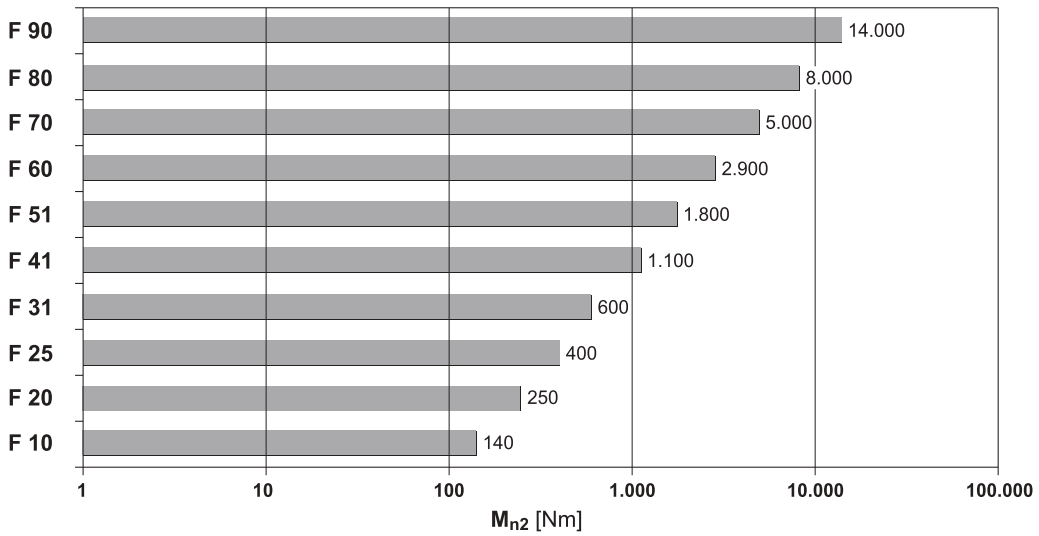

* For any limitations regarding construction type QF see the “VERSIONS” chapter.

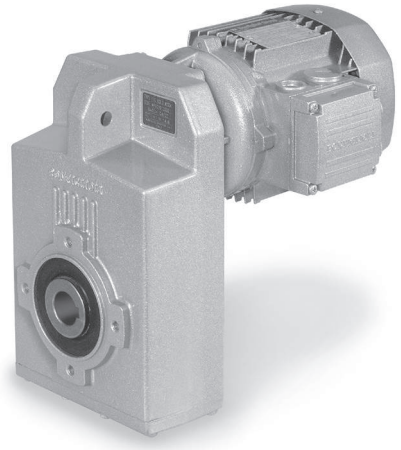

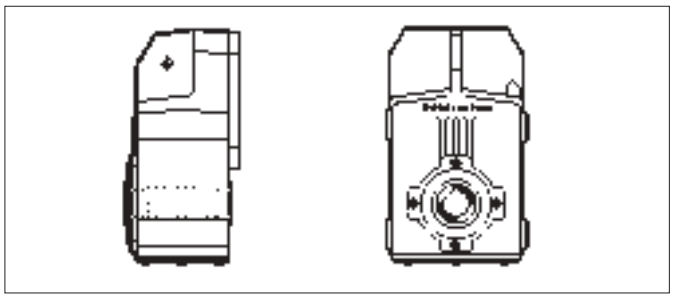

H

Hollow output shaft and keyway

F 10 ... F 90

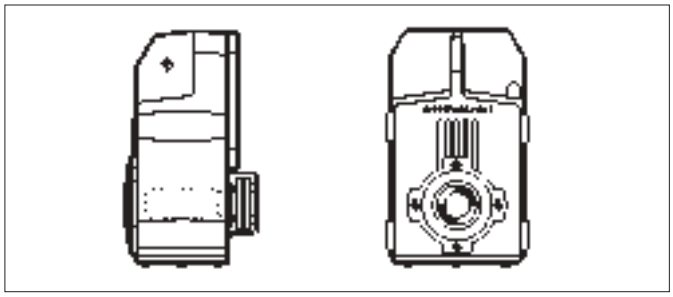

S

Hollow output shaft and shrink disc

F 10 ... F 90

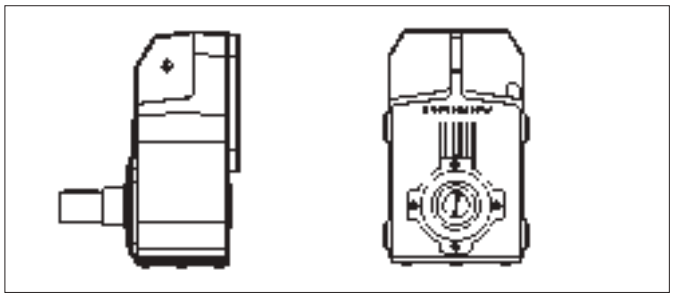

R

Solid output shaft

F 10 ... F 90

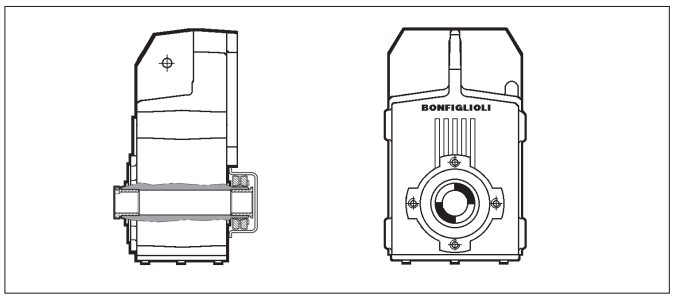

QF (Quick-fit)

Hollow shaft with adapter bushings and shrink disc

F 10 ... F 60

$M_{n2\ max}$ [Nm]	
F 25 QF30	350
F 41 QF42	850
F 41 QF45	1000
F 51 QF50	1750

Basic versions with bolted flange

The sketches show the applicable flanges to the basic versions.

H... F...

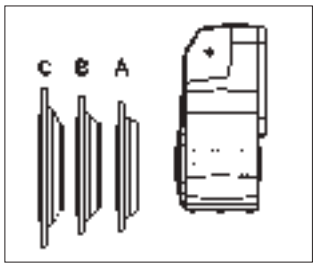

S F...

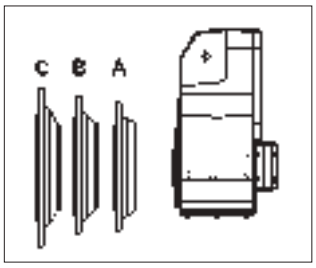

R F...

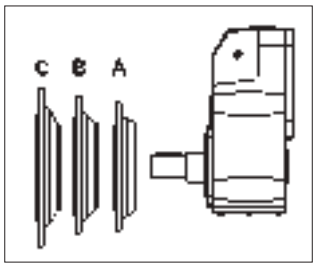

QF...

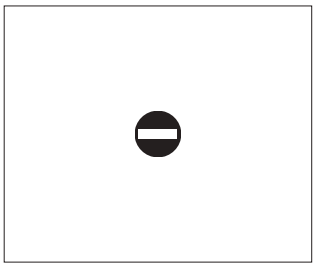

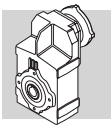

55 DESIGNATION

GEAR UNIT

F 10 2 H30 FA 48.7 S1 H5 .....

OPTIONS

MOUNTING POSITION
H1 (Default), **H2**, **H3**, **H4**, **H5**, **H6**

INPUT CONFIGURATION

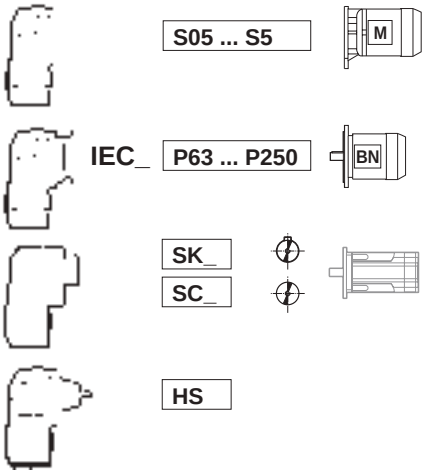

GEAR RATIO

OUTPUT FLANGE SIZE AND POSITION (specify only if requested)
F = Flanged version
A, **B**, **C** = Flange size

VERSION

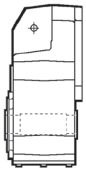

H										
	F 10	F 20	F 25	F 31	F 41	F 51	F 60	F 70	F 80	F 90
Standard	**H25**	**H30**	**H35**	**H35**	**H40**	**H50**	**H60**	**H80**	**H90**	**H100**
Alternative	H30	H35	H40	H40	H45	H55	H70	H70	H80	H90

Alternative diameters available on request

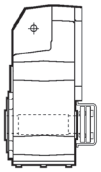

S
(F 10...F 90)

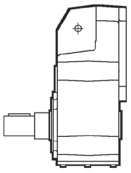

R
(F 10...F 90)

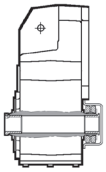

QF
(F 10...F 60)

REDUCTIONS
2 (F 10...F 51), **3** (F 20...F 90), **4** (F 31...F 90)

GEAR FRAME SIZE
10, **20**, **25**, **31**, **41**, **51**, **60**, **70**, **80**, **90**

TYPE **F** = helical shaft-mounted gear unit

MOTOR | BRAKE

M 1LA 4 230/400-50 IP54 CLF ..... **W FD** 7.5 R SB 220 SA .....

OPTIONS

BRAKE SUPPLY

RECTIFIER TYPE
AC/DC
NB, **SB**, **NBR**, **SBR**

BRAKE HAND RELEASE
R, **RM**

BRAKE TORQUE

BRAKE TYPE
FD (d.c. brake)
FA (a.c. brake)

TERMINAL BOX POSITION
W (default), **N**, **E**, **S**

MOTOR MOUNTING
— (compact motor)
B5 (IEC - motor)

INSULATION CLASS
CL F standard
CL H option

DEGREE OF PROTECTION
IP55 standard (IP54 - brake motor)

VOLTAGE - FREQUENCY

POLE NUMBER
2, **4**, **6**, **2/4**, **2/6**, **2/8**, **2/12**, **4/6**, **4/8**

MOTOR SIZE
0B ... 5LA (compact motor)
63A ... 280M (IEC motor)

MOTOR TYPE
M = compact 3-phase
BN = IEC 3-phase

55.1 Gearbox options

AL, AR

On request the gear unit can be provided complete with a backstop device allowing the output shaft to rotate only in the direction specified at the time of ordering.
The following table shows the gearboxes in which the anti-run back device can be installed.

(D 45)

F 31 2*	**F 41 2** ⛔ (6.7; 10.8)					
F 31 3*	**F 41 3**	**F 51 3**	**F 60 3**	**F 70 3**	**F 80 3**	**F 90 3**
		F 51 4	**F 60 4**	**F 70 4**	**F 80 4**	**F 90 4**

* The supply of the backstop will ban the configuration of servomotor adapters type S_60A, S_ 60B, S_80A.

When ordering the gear unit, the direction of free rotation must be specified through either the AR or the AL option (Table D46).

⚠ N.B. When the anti-run back device operates very frequently make sure that the torque backdriving the gearbox does not exceed 70% of the rated torque M_{n2} for the captioned gear unit.

(D 46)

SO

Gear units F 10 through F 41 usually factory filled with oil, to be supplied unlubricated.

LO

Gearboxes F 51 through F 90, usually supplied without oil, to be supplied with synthetic oil currently used by BONFIGLIOLI RIDUTTORI and filled according to the mounting position specified.

DV

Dual oil seals on input shaft. (Only available for integral gearmotors).

VV

Oil seal in Fluoro elastomer compound on input shaft.

PV
Both input and output shafts feature oil seal in Fluoro elastomer compound.

FL
Gear units F 10...F 41 can be side machined and tapped by specifying the FL option.
Mounting dimensions relevant to the FL option are given in the following chart. Gear units type F 51 through F 90 are side machined and tapped as standard.

(D 47)

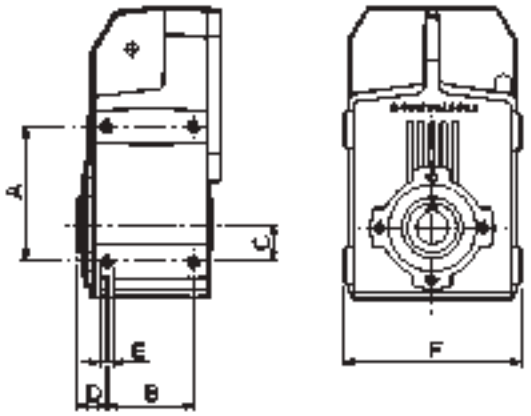

	A	B	C	D	E	F
F 10	115	60	35	21.25	M8x16	163
F 20	130	70	40	26.5	M10x20	181
F 25	130	70	40	27.5	M10x20	181
F 31	147	80	45	30	M12x20	203
F 41	190	95	60	32.5	M12x22	235

SURFACE PROTECTION

When no specific protection class is requested, the painted (ferrous) surfaces of gearboxes are protected to at least corrosivity class C2 (UNI EN ISO 12944-2). For improved resistance to atmospheric corrosion, gearboxes can be delivered with **C3** and **C4** surface protection, obtained by painting the complete gearbox.

(D 48)

SURFACE PROTECTION	Typical environments	Maximum surface temperature	Corrosivity class according to UNI EN ISO 12944-2
C3	Urban and industrial environments with up to 100% relative humidity (medium air pollution)	120°C	C3
C4	Industrial areas, coastal areas, chemical plant, with up to 100% relative humidity (high air pollution)	120°C	C4

Gearboxes with optional protection to class **C3** or **C4** are available in a choice of colours.
If no specific colour is requested (see the “PAINTING” option) gearboxes are finished in RAL 7042.
Gearboxes can also be supplied with surface protection for corrosivity class **C5** according to UNI EN ISO 12944-2. Contact our Technical Service for further details.

PAINTING

Gearboxes with optional protection to class C3 or C4 are available in the colours listed in the following table.

(D 49)

PAINTING	Colour	RAL number
RAL7042*	Traffic Grey A	7042
RAL5010	Gentian Blue	5010
RAL9005	Jet Black	9005
RAL9006	White Aluminium	9006
RAL9010	Pure White	9010

* Gearboxes are supplied in this standard colour if no other colour is specified.

NOTE – “PAINTING” options can only be specified in conjunction with “SURFACE PROTECTION” options.

CERTIFICATES

AC - Certificate of compliance
The document certifies the compliance of the product with the purchase order and the construction in conformity with the applicable procedures of the Bonfiglioli Quality System.

CC - Inspection certificate
The document entails checking on order compliance, the visual inspection of external conditions and of mating dimensions. Checking on main functional parameters in unloaded conditions is also performed along with oil seal proofing, both in static and in running conditions. Units inspected are sampled within the shipping batch and marked individually.

55.2 Accessories

See chapter 65 of this catalogue.

55.3 Motor options

AL, AR
A backstop device on the motor itself, as described in the electric motors section of this catalogue, is available for gearmotors with integral M Series motors. The following table shows the direction of free rotation of the gearbox, on the basis of which the correct option must be selected.

(D 50)

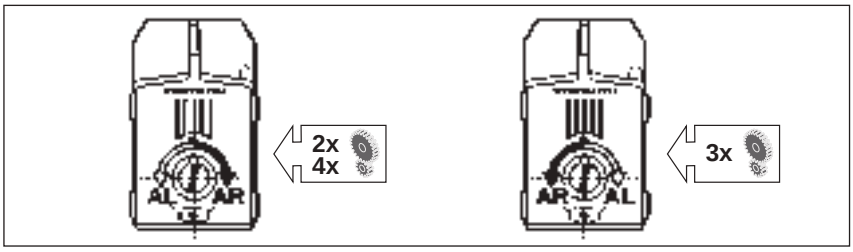

For further information on options, consult the electric motors section.

56 MOUNTING POSITION AND TERMINAL BOX ANGULAR LOCATION

Location of motor terminal box can be specified by viewing the motor from the fan side; standard location is shown in black (W).

Angular location of the brake release lever.
Unless otherwise specified, brake motors have the manual device side located, 90° apart from terminal box. Different angles can be specified through the relevant options available.

(D 51)

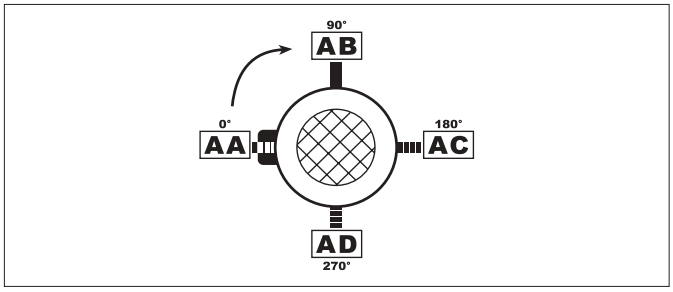

F ...

H1

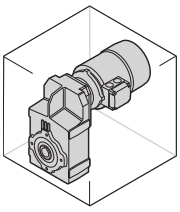
_S

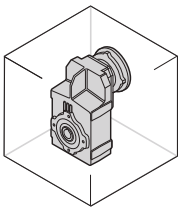
_P(IEC) _SK / _SC

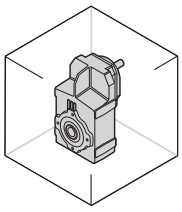
_HS

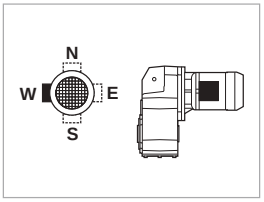

H2

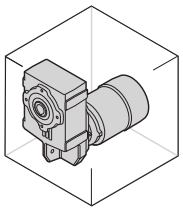
_S

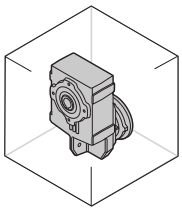
_P(IEC) _SK / _SC

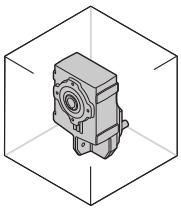
_HS

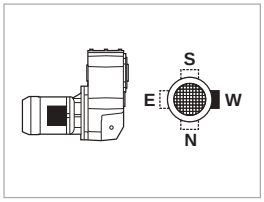

H3

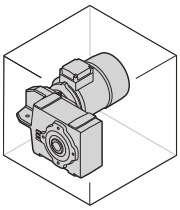
_S

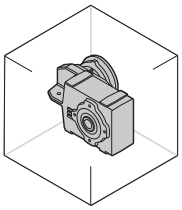
_P(IEC) _SK / _SC

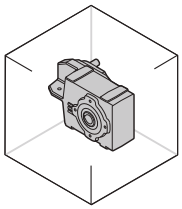
_HS

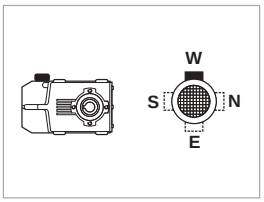

H4

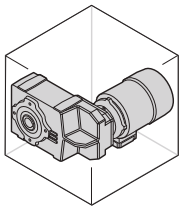
_S

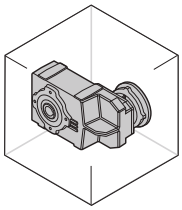
_P(IEC) _SK / _SC

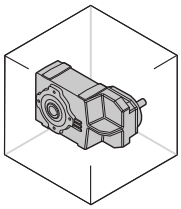
_HS

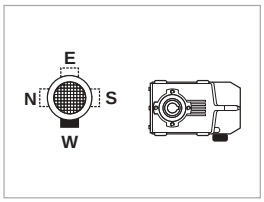

H5

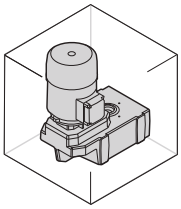
_S

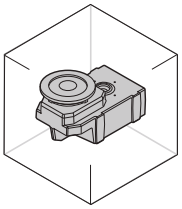
_P(IEC) _SK / _SC

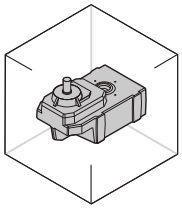
_HS

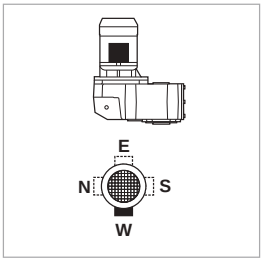

H6

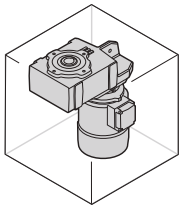
_S

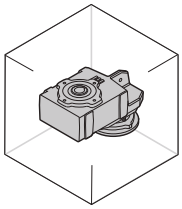
_P(IEC) _SK / _SC

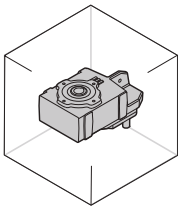
_HS

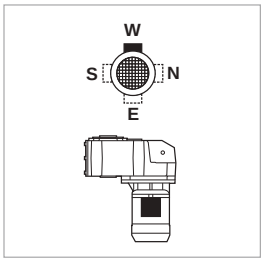

W = Default

57 OVERHUNG LOADS

External transmissions keyed onto input and/or output shaft generate loads that act radially onto same shaft.
Resulting shaft loading must be compatible with both the bearing and the shaft capacity. Namely shaft loading (R_{c1} for input shaft, R_{c2} for output shaft), must be equal or lower than admissible overhung load capacity for shaft under study (R_{n1} for input shaft, R_{n2} for output shaft). OHL capability listed in the rating chart section.
In the formulas given below, index (1) applies to parameters relating to input shaft, whereas index (2) refers to output shaft.
The load generated by an external transmission can be calculated with close approximation by the following equations:

$$R_{c1}[N] = \frac{2000 \cdot M_1[Nm] \cdot K_r}{d\,[mm]} \quad ; \quad R_{c2}[N] = \frac{2000 \cdot M_2[Nm] \cdot K_r}{d\,[mm]} \qquad (35)$$

(D 52)

M_1 [Nm]	Torque applied to input shaft
M_2 [Nm]	Torque drawn at output shaft
d [mm]	Pitch diameter of element keyed onto shaft
K_r = 1	Chain transmission

K_r = 1,25	Gear transmission
K_r = 1,5	V-belt transmission
K_r = 2,0	Flat belt transmission

Verification of OHL capability varies depending on whether load applies at midpoint of shaft or it is shifted further out:

(D 53)

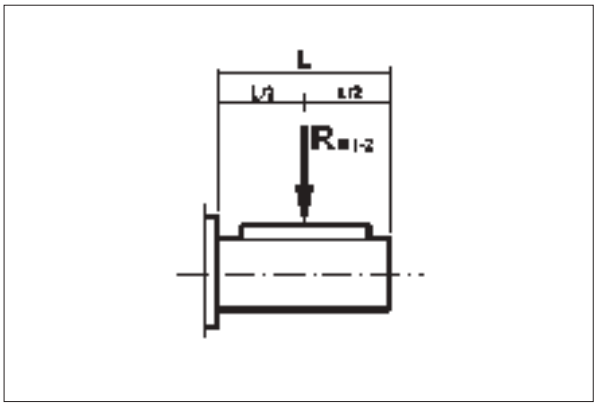

(D 54)

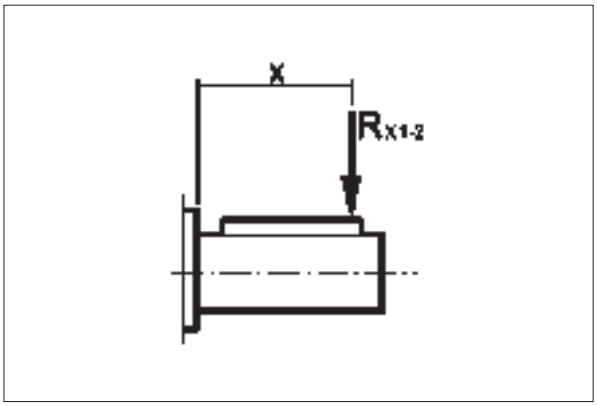

a) Load applied at midpoint of shaft, tab. (D53)

A comparison of shaft loading with catalogue OHL ratings should verify the following condition:

Rc1 ≤ Rn1 [input shaft]

or

Rc2 ≤ Rn2 [output shaft]

b) Load off the midpoint tab. (D54)

When load is shifted at an “x” distance from shaft shoulder, permissible load must be calculated for that distance.
Revised permissible overhung loads Rx1 (input) and Rx2 (output) are calculated respectively from original rated values Rn1 and Rn2 through factor:

$$\frac{a}{b+x} \qquad (36)$$

(D 55)

	Load location factors					
	Output shaft			Input shaft		
	a	**b**	**c**	**a**	**b**	**c**
F 10 2	123	100.5	450	21	1	300
F 20 2	145	115	600	40	20	350
F 20 3	145	115	600	21	1	300
F 25 2 - F 25 3	157.5	127.5	800	40	20	350
F 25 4	157.5	127.5	800	21	1	300
F 31 2 - F 31 3	165	135	850	38.5	18.5	350
F 31 4	165	135	850	21	1	300
F 41 2 - F 41 3	191.5	151.5	1000	49.5	24.5	450
F 41 4	191.5	151.5	1000	40	20	350
F 51 2 - F 51 3	233.5	183.5	1300	49.5	24.5	450
F 51 4	233.5	183.5	1300	38.5	18.5	350
F 60 3	258.5	198.5	1100	55.5	25.5	600
F 60 4	258.5	198.5	1100	49.5	24.5	450
F 70 3	342	277	1600	86	31	1000
F 70 4	342	277	1600	49.5	24.5	450
F 80 3	386.5	301.5	1800	86	31	1000
F 80 4	386.5	301.5	1800	49.5	24.5	450
F 90 3	458.5	353.5	2400	116	46	1400
F 90 4	458.5	353.5	2400	49.5	24.5	450

Verification procedure is described here after.

INPUT SHAFT

1. Calculate:

$$R_{x1} = R_{n1} \cdot \frac{a}{b+x} \qquad (37)$$

N.B. Subject to condition:

$$\frac{L}{2} \leq x \leq c \qquad (38)$$

Finally, the following condition must be verified:

$$R_{c1} \leq R_{x1} \qquad (39)$$

OUTPUT SHAFT

1. Calculate:

$$R_{x2} = R_{n2} \cdot \frac{a}{b+x} \qquad (40)$$

N.B. Subject to condition:

$$\frac{L}{2} \leq x \leq c \qquad (41)$$

Finally, the following condition must be verified:

$$R_{c2} \leq R_{x2} \qquad (42)$$

58 THRUST LOADS, A_{n1}, A_{n2}

Permissible thrust loads on input [A_{n1}] and output [A_{n2}] shafts are obtained from the radial loading for the shaft under consideration [R_{n1}] and [R_{n2}] through the following equation:

$$A_{n1} = R_{n1} \cdot 0.2$$
$$A_{n2} = R_{n2} \cdot 0.2 \qquad (43)$$

The thrust loads calculated through these formulas apply to thrust forces occurring at the same time as rated radial loads.
In the only case that no overhung load acts on the shaft the value of the admissible thrust load [A_n] amounts to 50% of rated OHL [R_n] on same shaft.
Where thrust loads exceed permissible value or largely prevail over radial loads, contact Bonfiglioli Riduttori for an in-depth analysis of the application.

0.09 kW

n_2 min^{-1}	M_2 Nm	S	i	R_{n2} N				
0.40	1945	2.6	2188	35000			**F704_2188 P63 BN63A6**	453
0.50	1526	3.4	1717	35000			**F704_1717 P63 BN63A6**	453
0.62	1254	0.9	1411	8500	**F414_1411 S05 M05A6**	440	**F414_1411 P63 BN63A6**	441
0.73	1079	1.0	1213	8500	**F414_1213 S05 M05A6**	440	**F414_1213 P63 BN63A6**	441
0.81	971	1.1	1092	8500	**F414_1092 S05 M05A6**	440	**F414_1092 P63 BN63A6**	441
0.90	874	1.3	982.4	8500	**F414_982.4 S05 M05A6**	440	**F414_982.4 P63 BN63A6**	441
0.98	801	1.4	900.5	8500	**F414_900.5 S05 M05A6**	440	**F414_900.5 P63 BN63A6**	441
1.1	724	1.5	813.8	8500	**F414_813.8 S05 M05A6**	440	**F414_813.8 P63 BN63A6**	441
1.2	678	0.9	762.3	6500	**F314_762.3 S05 M05A6**	436	**F314_762.3 P63 BN63A6**	437
1.2	658	1.7	739.4	8500	**F414_739.4 S05 M05A6**	440	**F414_739.4 P63 BN63A6**	441
1.3	610	1.0	685.6	6500	**F314_685.6 S05 M05A6**	436	**F314_685.6 P63 BN63A6**	437
1.3	614	1.8	690.1	8500	**F414_690.1 S05 M05A6**	440	**F414_690.1 P63 BN63A6**	441
1.4	551	1.1	619.9	6500	**F314_619.9 S05 M05A6**	436	**F314_619.9 P63 BN63A6**	437
1.5	515	1.2	578.6	6500	**F314_578.6 S05 M05A6**	436	**F314_578.6 P63 BN63A6**	437
1.6	489	2.2	549.8	8500	**F414_549.8 S05 M05A6**	440	**F414_549.8 P63 BN63A6**	441
1.7	469	0.9	527.3	6500	**F254_527.3 S05 M05A6**	432	**F254_527.3 P63 BN63A6**	433
1.7	469	1.3	527.8	6500	**F314_527.8 S05 M05A6**	436	**F314_527.8 P63 BN63A6**	437
1.9	414	1.0	466.0	6500	**F254_466.0 S05 M05A6**	432	**F254_466.0 P63 BN63A6**	433
1.9	411	1.5	462.6	6500	**F314_462.6 S05 M05A6**	436	**F314_462.6 P63 BN63A6**	437
2.0	387	1.0	434.9	6500	**F254_434.9 S05 M05A6**	432	**F254_434.9 P63 BN63A6**	433
2.0	386	2.9	433.7	8500	**F414_433.7 S05 M05A6**	440	**F414_433.7 P63 BN63A6**	441
2.1	372	1.6	418.9	6500	**F314_418.9 S05 M05A6**	436	**F314_418.9 P63 BN63A6**	437
2.2	350	1.1	393.9	6500	**F254_393.9 S05 M05A6**	432	**F254_393.9 P63 BN63A6**	433
2.4	340	1.8	374.4	6500			**F313_374.4 P63 BN63A6**	437
2.6	302	2.0	332.8	6500			**F313_332.8 P63 BN63A6**	437
2.6	313	3.5	344.8	8500			**F413_344.8 P63 BN63A6**	441
2.8	288	0.9	316.9	4000	**F203_316.9 S05 M05A6**	428	**F203_316.9 P63 BN63A6**	429
3.0	267	2.2	293.8	6500			**F313_293.8 P63 BN63A6**	437
3.1	259	1.0	285.2	4000	**F203_285.2 S05 M05A6**	428	**F203_285.2 P63 BN63A6**	429
3.4	232	1.1	255.3	4000	**F203_255.3 S05 M05A6**	428	**F203_255.3 P63 BN63A6**	429
3.5	230	2.6	253.6	6500			**F313_253.6 P63 BN63A6**	437
3.9	207	2.9	228.2	6500			**F313_228.2 P63 BN63A6**	437
4.2	190	1.3	209.3	4000	**F203_209.3 S05 M05A6**	428	**F203_209.3 P63 BN63A6**	429
4.4	184	3.3	202.3	6500			**F313_202.3 P63 BN63A6**	437
4.8	168	1.5	184.9	4000	**F203_184.9 S05 M05A6**	428	**F203_184.9 P63 BN63A6**	429
5.1	157	1.6	172.6	4000	**F203_172.6 S05 M05A6**	428	**F203_172.6 P63 BN63A6**	429
5.6	142	1.8	156.3	4000	**F203_156.3 S05 M05A6**	428	**F203_156.3 P63 BN63A6**	429
6.7	123	2.0	132.2	4000	**F202_132.2 S05 M05A6**	428	**F202_132.2 P63 BN63A6**	429
6.9	118	1.2	127.1	2800	**F102_127.1 S05 M05A6**	424	**F102_127.1 P63 BN63A6**	425
7.7	106	2.4	114.3	4000	**F202_114.3 S05 M05A6**	428	**F202_114.3 P63 BN63A6**	429
8.3	98	1.4	106.0	2800	**F102_106.0 S05 M05A6**	424	**F102_106.0 P63 BN63A6**	425
8.7	94	2.6	101.6	4000	**F202_101.6 S05 M05A6**	428	**F202_101.6 P63 BN63A6**	429
9.6	85	1.6	91.5	2800	**F102_91.5 S05 M05A6**	424	**F102_91.5 P63 BN63A6**	425
9.7	84	3.0	90.4	4000	**F202_90.4 S05 M05A6**	428	**F202_90.4 P63 BN63A6**	429
10.8	75	1.9	81.3	2800	**F102_81.3 S05 M05A6**	424	**F102_81.3 P63 BN63A6**	425
11.5	71	3.5	76.8	4000	**F202_76.8 S05 M05A6**	428	**F202_76.8 P63 BN63A6**	429
12.4	66	2.1	71.1	2800	**F102_71.1 S05 M05A6**	424	**F102_71.1 P63 BN63A6**	425
14.0	58	2.4	63.0	2800	**F102_63.0 S05 M05A6**	424	**F102_63.0 P63 BN63A6**	425

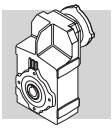

0.09 kW

n_2 min^{-1}	M_2 Nm	S	i	R_{n2} N				
15.5	53	2.7	56.7	2800	**F102_56.7 S05 M05A6**	424	**F102_56.7 P63 BN63A6**	425
18.1	45	3.1	48.7	2800	**F102_48.7 S05 M05A6**	424	**F102_48.7 P63 BN63A6**	425
19.7	41	3.4	44.7	2800	**F102_44.7 S05 M05A6**	424	**F102_44.7 P63 BN63A6**	425
22.2	37	3.8	39.6	2800	**F102_39.6 S05 M05A6**	424	**F102_39.6 P63 BN63A6**	425
24.9	33	4.3	35.3	2800	**F102_35.3 S05 M05A6**	424	**F102_35.3 P63 BN63A6**	425
26.7	31	4.6	33.0	2800	**F102_33.0 S05 M05A6**	424	**F102_33.0 P63 BN63A6**	425
29.7	28	5.1	29.6	2800	**F102_29.6 S05 M05A6**	424	**F102_29.6 P63 BN63A6**	425
34	24	5.9	25.8	2800	**F102_25.8 S05 M05A6**	424	**F102_25.8 P63 BN63A6**	425
39	21	6.6	22.8	2800	**F102_22.8 S05 M05A6**	424	**F102_22.8 P63 BN63A6**	425
46	18	7.8	19.3	2800	**F102_19.3 S05 M05A6**	424	**F102_19.3 P63 BN63A6**	425
52	16	8.9	17.0	2800	**F102_17.0 S05 M05A6**	424	**F102_17.0 P63 BN63A6**	425
60	14	10.1	14.6	2700	**F102_14.6 S05 M05A6**	424	**F102_14.6 P63 BN63A6**	425
68	12	10.3	13.0	2600	**F102_13.0 S05 M05A6**	424	**F102_13.0 P63 BN63A6**	425
76	11	10.3	11.5	2500	**F102_11.5 S05 M05A6**	424	**F102_11.5 P63 BN63A6**	425
90	9	11.8	9.8	2370	**F102_9.8 S05 M05A6**	424	**F102_9.8 P63 BN63A6**	425
103	8	11.8	8.6	2270	**F102_8.6 S05 M05A6**	424	**F102_8.6 P63 BN63A6**	425
119	7	13.2	7.4	2160	**F102_7.4 S05 M05A6**	424	**F102_7.4 P63 BN63A6**	425

0.12 kW

n_2 min^{-1}	M_2 Nm	S	i	R_{n2} N				
0.40	2623	1.9	2188	35000			**F704_2188 P63 BN63B6**	453
0.51	2058	2.5	1717	35000			**F704_1717 P63 BN63B6**	453
0.60	1742	2.9	2188	35000			**F704_2188 P63 BN63A4**	453
0.65	1607	3.1	2019	35000			**F704_2019 P63 BN63A4**	453
0.76	1368	2.1	1141	20000			**F604_1141 P63 BN63B6**	449
0.89	1178	0.9	982.4	8500	**F414_982.4 S05 M05B6**	440	**F414_982.4 P63 BN63B6**	441
0.96	1090	1.0	1411	8500	**F414_1411 S05 M05A4**	440	**F414_1411 P63 BN63A4**	441
1.1	938	1.2	1213	8500	**F414_1213 S05 M05A4**	440	**F414_1213 P63 BN63A4**	441
1.2	844	1.3	1092	8500	**F414_1092 S05 M05A4**	440	**F414_1092 P63 BN63A4**	441
1.4	759	1.4	982.4	8500	**F414_982.4 S05 M05A4**	440	**F414_982.4 P63 BN63A4**	441
1.5	696	1.6	900.5	8500	**F414_900.5 S05 M05A4**	440	**F414_900.5 P63 BN63A4**	441
1.6	643	0.9	831.6	6500	**F314_831.6 S05 M05A4**	436	**F314_831.6 P63 BN63A4**	437
1.7	629	1.7	813.8	8500	**F414_813.8 S05 M05A4**	440	**F414_813.8 P63 BN63A4**	441
1.8	589	1.0	762.3	6500	**F314_762.3 S05 M05A4**	436	**F314_762.3 P63 BN63A4**	437
1.8	571	1.9	739.4	8500	**F414_739.4 S05 M05A4**	440	**F414_739.4 P63 BN63A4**	441
2.0	530	1.1	685.6	6500	**F314_685.6 S05 M05A4**	436	**F314_685.6 P63 BN63A4**	437
2.0	533	2.1	690.1	8500	**F414_690.1 S05 M05A4**	440	**F414_690.1 P63 BN63A4**	441
2.2	479	1.3	619.9	6500	**F314_619.9 S05 M05A4**	436	**F314_619.9 P63 BN63A4**	437
2.3	456	0.9	589.7	6500	**F254_589.7 S05 M05A4**	432	**F254_589.7 P63 BN63A4**	433
2.3	447	1.3	578.6	6500	**F314_578.6 S05 M05A4**	436	**F314_578.6 P63 BN63A4**	437
2.5	425	2.6	549.8	8500	**F414_549.8 S05 M05A4**	440	**F414_549.8 P63 BN63A4**	441
2.6	408	1.0	527.3	6500	**F254_527.3 S05 M05A4**	432	**F254_527.3 P63 BN63A4**	433
2.6	408	1.5	527.8	6500	**F314_527.8 S05 M05A4**	436	**F314_527.8 P63 BN63A4**	437
2.9	360	1.1	466.0	6500	**F254_466.0 S05 M05A4**	432	**F254_466.0 P63 BN63A4**	433
2.9	358	1.7	462.6	6500	**F314_462.6 S05 M05A4**	436	**F314_462.6 P63 BN63A4**	437
3.1	336	1.2	434.9	6500	**F254_434.9 S05 M05A4**	432	**F254_434.9 P63 BN63A4**	433
3.1	335	3.3	433.7	8500	**F414_433.7 S05 M05A4**	440	**F414_433.7 P63 BN63A4**	441

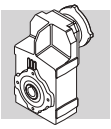

0.12 kW

n_2 min^{-1}	M_2 Nm	S	i	R_{n2} N				
3.2	324	1.9	418.9	6500	**F314_418.9 S05 M05A4**	436	**F314_418.9 P63 BN63A4**	437
3.4	304	1.3	393.9	6500	**F254_393.9 S05 M05A4**	432	**F254_393.9 P63 BN63A4**	433
3.6	296	2.0	374.4	6500			**F313_374.4 P63 BN63A4**	437
4.1	263	1.5	333.1	6500	**F253_333.1 S05 M05A4**	432	**F253_333.1 P63 BN63A4**	433
4.1	263	2.3	332.8	6500			**F313_332.8 P63 BN63A4**	437
4.3	250	1.0	316.9	4000	**F203_316.9 S05 M05A4**	428	**F203_316.9 P63 BN63A4**	429
4.6	232	2.6	293.8	6500			**F313_293.8 P63 BN63A4**	437
4.7	225	1.1	285.2	4000	**F203_285.2 S05 M05A4**	428	**F203_285.2 P63 BN63A4**	429
4.7	228	1.8	288.1	6500	**F253_288.1 S05 M05A4**	432	**F253_288.1 P63 BN63A4**	433
5.3	202	1.2	255.3	4000	**F203_255.3 S05 M05A4**	428	**F203_255.3 P63 BN63A4**	429
5.3	202	2.0	256.1	6500	**F253_256.1 S05 M05A4**	432	**F253_256.1 P63 BN63A4**	433
5.3	200	3.0	253.6	6500			**F313_253.6 P63 BN63A4**	437
5.9	180	2.2	227.8	6500	**F253_227.8 S05 M05A4**	432	**F253_227.8 P63 BN63A4**	433
5.9	180	3.3	228.2	6500			**F313_228.2 P63 BN63A4**	437
6.5	165	1.5	209.3	4000	**F203_209.3 S05 M05A4**	428	**F203_209.3 P63 BN63A4**	429
7.0	153	2.6	193.6	6500	**F253_193.6 S05 M05A4**	432	**F253_193.6 P63 BN63A4**	433
7.3	146	1.7	184.9	4000	**F203_184.9 S05 M05A4**	428	**F203_184.9 P63 BN63A4**	429
7.7	138	2.9	174.2	6500	**F253_174.2 S05 M05A4**	432	**F253_174.2 P63 BN63A4**	433
7.8	136	1.8	172.6	4000	**F203_172.6 S05 M05A4**	428	**F203_172.6 P63 BN63A4**	429
8.6	123	2.0	156.3	4000	**F203_156.3 S05 M05A4**	428	**F203_156.3 P63 BN63A4**	429
8.7	123	3.2	155.9	6500	**F253_155.9 S05 M05A4**	432	**F253_155.9 P63 BN63A4**	433
9.4	113	3.5	143.0	6500	**F253_143.0 S05 M05A4**	432	**F253_143.0 P63 BN63A4**	433
10.2	107	2.3	132.2	4000	**F202_132.2 S05 M05A4**	428	**F202_132.2 P63 BN63A4**	429
10.6	103	1.4	127.1	2800	**F102_127.1 S05 M05A4**	424	**F102_127.1 P63 BN63A4**	425
11.8	92	2.7	114.3	4000	**F202_114.3 S05 M05A4**	428	**F202_114.3 P63 BN63A4**	429
12.7	86	1.6	106.0	2800	**F102_106.0 S05 M05A4**	424	**F102_106.0 P63 BN63A4**	425
13.3	82	3.0	101.6	4000	**F202_101.6 S05 M05A4**	428	**F202_101.6 P63 BN63A4**	429
14.8	74	1.9	91.5	2800	**F102_91.5 S05 M05A4**	424	**F102_91.5 P63 BN63A4**	425
14.9	73	3.4	90.4	4000	**F202_90.4 S05 M05A4**	428	**F202_90.4 P63 BN63A4**	429
16.6	66	2.1	81.3	2800	**F102_81.3 S05 M05A4**	424	**F102_81.3 P63 BN63A4**	425
19.0	57	2.4	71.1	2800	**F102_71.1 S05 M05A4**	424	**F102_71.1 P63 BN63A4**	425
21.4	51	2.8	63.0	2800	**F102_63.0 S05 M05A4**	424	**F102_63.0 P63 BN63A4**	425
23.8	46	3.1	56.7	2800	**F102_56.7 S05 M05A4**	424	**F102_56.7 P63 BN63A4**	425
27.7	39	3.6	48.7	2800	**F102_48.7 S05 M05A4**	424	**F102_48.7 P63 BN63A4**	425
30	36	3.9	44.7	2800	**F102_44.7 S05 M05A4**	424	**F102_44.7 P63 BN63A4**	425
34	32	4.4	39.6	2800	**F102_39.6 S05 M05A4**	424	**F102_39.6 P63 BN63A4**	425
38	29	4.9	35.3	2800	**F102_35.3 S05 M05A4**	424	**F102_35.3 P63 BN63A4**	425
41	27	5.3	33	2800	**F102_33.0 S05 M05A4**	424	**F102_33.0 P63 BN63A4**	425
46	24	5.9	29.6	2800	**F102_29.6 S05 M05A4**	424	**F102_29.6 P63 BN63A4**	425
52	21	6.7	25.8	2800	**F102_25.8 S05 M05A4**	424	**F102_25.8 P63 BN63A4**	425
59	18	7.6	22.8	2700	**F102_22.8 S05 M05A4**	424	**F102_22.8 P63 BN63A4**	425
70	16	8.7	19.3	2560	**F102_19.3 S05 M05A4**	424	**F102_19.3 P63 BN63A4**	425
80	14	9.3	17.0	2450	**F102_17.0 S05 M05A4**	424	**F102_17.0 P63 BN63A4**	425
92	12	10.1	14.6	2340	**F102_14.6 S05 M05A4**	424	**F102_14.6 P63 BN63A4**	425
104	11	9.9	13.0	2250	**F102_13.0 S05 M05A4**	424	**F102_13.0 P63 BN63A4**	425
117	9	10.3	11.5	2160	**F102_11.5 S05 M05A4**	424	**F102_11.5 P63 BN63A4**	425
138	8	11.3	9.8	2050	**F102_9.8 S05 M05A4**	424	**F102_9.8 P63 BN63A4**	425
157	7	11.8	8.6	1970	**F102_8.6 S05 M05A4**	424	**F102_8.6 P63 BN63A4**	425
182	6	12.7	7.4	1870	**F102_7.4 S05 M05A4**	424	**F102_7.4 P63 BN63A4**	425

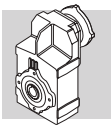

0.18 kW

n_2 min^{-1}	M_2 Nm	S	i	R_{n2} N				
0.41	3804	1.3	2188	35000	**F704_2188 S1 M1SC6**	452	**F704_2188 P71 BN71A6**	453
0.45	3511	1.4	2019	35000	**F704_2019 S1 M1SC6**	452	**F704_2019 P71 BN71A6**	453
0.45	3455	2.3	1987	45000	**F804_1987 S1 M1SC6**	455	**F804_1987 P71 BN71A6**	456
0.49	3189	2.5	1834	45000	**F804_1834 S1 M1SC6**	455	**F804_1834 P71 BN71A6**	456
0.52	2985	1.7	1717	35000	**F704_1717 S1 M1SC6**	452	**F704_1717 P71 BN71A6**	453
0.53	2972	2.7	1709	45000	**F804_1709 S1 M1SC6**	455	**F804_1709 P71 BN71A6**	456
0.57	2756	1.8	1585	35000	**F704_1585 S1 M1SC6**	452	**F704_1585 P71 BN71A6**	453
0.57	2744	2.9	1578	45000	**F804_1578 S1 M1SC6**	455	**F804_1578 P71 BN71A6**	456
0.61	2576	1.9	1481	35000	**F704_1481 S1 M1SC6**	452	**F704_1481 P71 BN71A6**	453
0.65	2406	3.3	1384	45000	**F804_1384 S1 M1SC6**	455	**F804_1384 P71 BN71A6**	456
0.66	2378	2.1	1368	35000	**F704_1368 S1 M1SC6**	452	**F704_1368 P71 BN71A6**	453
0.76	2055	2.4	1182	35000	**F704_1182 S1 M1SC6**	452	**F704_1182 P71 BN71A6**	453
0.77	2030	0.9	1168	12000	**F514_1168 S1 M1SC6**	444	**F514_1168 P71 BN71A6**	445
0.79	1985	1.5	1141	20000	**F604_1141 S1 M1SC6**	448	**F604_1141 P71 BN71A6**	449
0.83	1897	2.6	1091	35000	**F704_1091 S1 M1SC6**	452	**F704_1091 P71 BN71A6**	453
0.84	1861	1.0	1070	12000	**F514_1070 S1 M1SC6**	444	**F514_1070 P71 BN71A6**	445
0.85	1832	1.6	1054	20000	**F604_1054 S1 M1SC6**	448	**F604_1054 P71 BN71A6**	449
0.92	1703	1.1	979.4	12000	**F514_979.4 S1 M1SC6**	444	**F514_979.4 P71 BN71A6**	445
0.92	1694	3.0	974.4	35000	**F704_974.4 S1 M1SC6**	452	**F704_974.4 P71 BN71A6**	453
0.94	1667	1.7	958.9	20000	**F604_958.9 S1 M1SC6**	448	**F604_958.9 P71 BN71A6**	449
1.0	1540	1.2	885.5	12000	**F514_885.5 S1 M1SC6**	444	**F514_885.5 P71 BN71A6**	445
1.0	1539	1.9	885.1	20000	**F604_885.1 S1 M1SC6**	448	**F604_885.1 P71 BN71A6**	449
1.0	1564	3.2	899.4	35000	**F704_899.4 S1 M1SC6**	452	**F704_899.4 P71 BN71A6**	453
1.1	1437	1.3	826.4	12000	**F514_826.4 S1 M1SC6**	444	**F514_826.4 P71 BN71A6**	445
1.1	1430	3.5	822.2	35000	**F704_822.2 S1 M1SC6**	452	**F704_822.2 P71 BN71A6**	453
1.2	1286	0.9	739.4	8500	**F414_739.4 S1 M1SC6**	440	**F414_739.4 P71 BN71A6**	441
1.2	1286	0.9	739.4	8500	**F414_739.4 S1 M1SC6**	440	**F414_739.4 P71 BN71A6**	441
1.3	1200	0.9	690.1	8500	**F414_690.1 S1 M1SC6**	440	**F414_690.1 P71 BN71A6**	441
1.3	1200	0.9	690.1	8500	**F414_690.1 S1 M1SC6**	440	**F414_690.1 P71 BN71A6**	441
1.3	1165	0.9	982.4	8500	**F414_982.4 S05 M05B4**	440	**F414_982.4 P63 BN63B4**	441
1.5	1068	1.0	900.5	8500	**F414_900.5 S05 M05B4**	440	**F414_900.5 P63 BN63B4**	441
1.6	965	1.1	813.8	8500	**F414_813.8 S05 M05B4**	440	**F414_813.8 P63 BN63B4**	441
1.8	877	1.3	739.4	8500	**F414_739.4 S05 M05B4**	440	**F414_739.4 P63 BN63B4**	441
1.9	818	1.3	690.1	8500	**F414_690.1 S05 M05B4**	440	**F414_690.1 P63 BN63B4**	441
2.3	686	0.9	578.6	6500	**F314_578.6 S05 M05B4**	436	**F314_578.6 P63 BN63B4**	437
2.4	652	1.7	549.8	8500	**F414_549.8 S05 M05B4**	440	**F414_549.8 P63 BN63B4**	441
2.5	626	1.0	527.8	6500	**F314_527.8 S05 M05B4**	436	**F314_527.8 P63 BN63B4**	437
2.9	549	1.1	462.6	6500	**F314_462.6 S05 M05B4**	436	**F314_462.6 P63 BN63B4**	437
3.0	514	2.1	433.7	8500	**F414_433.7 S05 M05B4**	440	**F414_433.7 P63 BN63B4**	441
3.2	497	1.2	418.9	6500	**F314_418.9 S05 M05B4**	436	**F314_418.9 P63 BN63B4**	437
3.4	467	0.9	393.9	6500	**F254_393.9 S05 M05B4**	432	**F254_393.9 P63 BN63B4**	433
3.5	454	1.3	374.4	6500			**F313_374.4 P63 BN63B4**	437
3.8	418	2.6	344.8	8500			**F413_344.8 P63 BN63B4**	441
4.0	404	1.0	333.1	6500	**F253_333.1 S05 M05B4**	432	**F253_333.1 P63 BN63B4**	433
4.0	403	1.5	332.8	6500			**F313_332.8 P63 BN63B4**	437
4.5	356	1.7	293.8	6500			**F313_293.8 P63 BN63B4**	437
4.5	359	3.1	296.6	8500			**F413_296.6 P63 BN63B4**	441
4.6	349	1.1	288.1	6500	**F253_288.1 S05 M05B4**	432	**F253_288.1 P63 BN63B4**	433
4.9	323	3.4	266.9	8500			**F413_266.9 P63 BN63B4**	441
5.2	310	1.3	256.1	6500	**F253_256.1 S05 M05B4**	432	**F253_256.1 P63 BN63B4**	433
5.2	307	2.0	253.6	6500			**F313_253.6 P63 BN63B4**	437

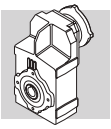

0.18 kW

n_2 min^{-1}	M_2 Nm	S	i	R_{n2} N				
5.8	276	1.4	227.8	6500	**F253_227.8 S05 M05B4**	432	**F253_227.8 P63 BN63B4**	433
5.8	277	2.2	228.2	6500			**F313_228.2 P63 BN63B4**	437
6.3	254	1.0	209.3	4000	**F203_209.3 S05 M05B4**	428	**F203_209.3 P63 BN63B4**	429
6.5	245	2.4	202.3	6500			**F313_202.3 P63 BN63B4**	437
6.8	235	1.7	193.6	6500	**F253_193.6 S05 M05B4**	432	**F253_193.6 P63 BN63B4**	433
7.1	224	1.1	184.9	4000	**F203_184.9 S05 M05B4**	428	**F203_184.9 P63 BN63B4**	429
7.1	225	2.7	185.4	6500			**F313_185.4 P63 BN63B4**	437
7.6	209	1.2	172.6	4000	**F203_172.6 S05 M05B4**	428	**F203_172.6 P63 BN63B4**	429
7.6	211	1.9	174.2	6500	**F253_174.2 S05 M05B4**	432	**F253_174.2 P63 BN63B4**	433
7.9	202	3.0	166.8	6500			**F313_166.8 P63 BN63B4**	437
8.4	189	1.3	156.3	4000	**F203_156.3 S05 M05B4**	428	**F203_156.3 P63 BN63B4**	429
8.5	189	2.1	155.9	6500	**F253_155.9 S05 M05B4**	432	**F253_155.9 P63 BN63B4**	433
8.8	183	3.3	150.8	6500			**F313_150.8 P63 BN63B4**	437
9.2	173	2.3	143.0	6500	**F253_143.0 S05 M05B4**	432	**F253_143.0 P63 BN63B4**	433
9.4	171	3.5	140.7	6500			**F313_140.7 P63 BN63B4**	437
10.0	164	1.5	132.2	4000	**F202_132.2 S05 M05B4**	428	**F202_132.2 P63 BN63B4**	429
10.3	155	2.6	127.8	6500	**F253_127.8 S05 M05B4**	432	**F253_127.8 P63 BN63B4**	433
10.4	157	0.9	127.1	2800	**F102_127.1 S05 M05B4**	424	**F102_127.1 P63 BN63B4**	425
11.5	142	1.8	114.3	4000	**F202_114.3 S05 M05B4**	428	**F202_114.3 P63 BN63B4**	429
11.7	137	2.9	113.0	6500	**F253_113.0 S05 M05B4**	432	**F253_113.0 P63 BN63B4**	433
12.5	131	1.1	106.0	2800	**F102_106.0 S05 M05B4**	424	**F102_106.0 P63 BN63B4**	425
12.5	128	3.1	105.4	6500	**F253_105.4 S05 M05B4**	432	**F253_105.4 P63 BN63B4**	433
13.0	126	2.0	101.6	4000	**F202_101.6 S05 M05B4**	428	**F202_101.6 P63 BN63B4**	429
13.8	116	3.5	95.5	6500	**F253_95.5 S05 M05B4**	432	**F253_95.5 P63 BN63B4**	433
14.4	113	1.2	91.5	2800	**F102_91.5 S05 M05B4**	424	**F102_91.5 P63 BN63B4**	425
14.6	112	2.2	90.4	4000	**F202_90.4 S05 M05B4**	428	**F202_90.4 P63 BN63B4**	429
16.2	101	1.4	81.3	2800	**F102_81.3 S05 M05B4**	424	**F102_81.3 P63 BN63B4**	425
17.2	95	2.6	76.8	4000	**F202_76.8 S05 M05B4**	428	**F202_76.8 P63 BN63B4**	429
18.6	88	1.6	71.1	2800	**F102_71.1 S05 M05B4**	424	**F102_71.1 P63 BN63B4**	425
19.1	86	2.9	69.1	4000	**F202_69.1 S05 M05B4**	428	**F202_69.1 P63 BN63B4**	429
21.0	78	1.8	63.0	2800	**F102_63.0 S05 M05B4**	424	**F102_63.0 P63 BN63B4**	425
21.3	77	3.3	61.9	4000	**F202_61.9 S05 M05B4**	428	**F202_61.9 P63 BN63B4**	429
23.3	70	2.0	56.7	2800	**F102_56.7 S05 M05B4**	424	**F102_56.7 P63 BN63B4**	425
27.1	60	2.3	48.7	2800	**F102_48.7 S05 M05B4**	424	**F102_48.7 P63 BN63B4**	425
29.6	55	2.5	44.7	2800	**F102_44.7 S05 M05B4**	424	**F102_44.7 P63 BN63B4**	425
33	49	2.9	39.6	2800	**F102_39.6 S05 M05B4**	424	**F102_39.6 P63 BN63B4**	425
37	44	3.2	35.3	2800	**F102_35.3 S05 M05B4**	424	**F102_35.3 P63 BN63B4**	425
40	41	3.4	33.0	2800	**F102_33.0 S05 M05B4**	424	**F102_33.0 P63 BN63B4**	425
45	37	3.8	29.6	2800	**F102_29.6 S05 M05B4**	424	**F102_29.6 P63 BN63B4**	425
51	32	4.4	25.8	2780	**F102_25.8 S05 M05B4**	424	**F102_25.8 P63 BN63B4**	425
58	28	5.0	22.8	2680	**F102_22.8 S05 M05B4**	424	**F102_22.8 P63 BN63B4**	425
68	24	5.7	19.3	2540	**F102_19.3 S05 M05B4**	424	**F102_19.3 P63 BN63B4**	425
78	21	6.1	17.0	2440	**F102_17.0 S05 M05B4**	424	**F102_17.0 P63 BN63B4**	425
90	18	6.6	14.6	2330	**F102_14.6 S05 M05B4**	424	**F102_14.6 P63 BN63B4**	425
101	16	6.4	13.0	2240	**F102_13.0 S05 M05B4**	424	**F102_13.0 P63 BN63B4**	425
114	14	6.7	11.5	2150	**F102_11.5 S05 M05B4**	424	**F102_11.5 P63 BN63B4**	425
135	12	7.4	9.8	2040	**F102_9.8 S05 M05B4**	424	**F102_9.8 P63 BN63B4**	425
154	11	7.7	8.6	1960	**F102_8.6 S05 M05B4**	424	**F102_8.6 P63 BN63B4**	425
178	9	8.3	7.4	1870	**F102_7.4 S05 M05B4**	424	**F102_7.4 P63 BN63B4**	425
186	9	10.7	14.6	1860	**F102_14.6 S05 M05A2**	424	**F102_14.6 P63 BN63A2**	425
210	8	10.9	13.0	1790	**F102_13.0 S05 M05A2**	424	**F102_13.0 P63 BN63A2**	425

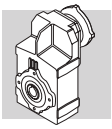

0.18 kW

n_2 min-1	M_2 Nm	S	i	R_{n2} N				
237	7	11.3	11.5	1720	**F102_11.5 S05 M05A2**	424	**F102_11.5 P63 BN63A2**	425
279	6	12.5	9.8	1630	**F102_9.8 S05 M05A2**	424	**F102_9.8 P63 BN63A2**	425
318	5	13.0	8.6	1560	**F102_8.6 S05 M05A2**	424	**F102_8.6 P63 BN63A2**	425
369	4	14.2	7.4	1490	**F102_7.4 S05 M05A2**	424	**F102_7.4 P63 BN63A2**	425

0.25 kW

n_2 min-1	M_2 Nm	S	i	R_{n2} N				
0.41	5283	0.9	2188	35000	**F704_2188 S1 M1SD6**	452	**F704_2188 P71 BN71B6**	453
0.45	4877	1.0	2019	35000	**F704_2019 S1 M1SD6**	452	**F704_2019 P71 BN71B6**	453
0.45	4799	1.7	1987	45000	**F804_1987 S1 M1SD6**	455	**F804_1987 P71 BN71B6**	456
0.49	4430	1.8	1834	45000	**F804_1834 S1 M1SD6**	455	**F804_1834 P71 BN71B6**	456
0.52	4146	1.2	1717	35000	**F704_1717 S1 M1SD6**	452	**F704_1717 P71 BN71B6**	453
0.53	4128	1.9	1709	45000	**F804_1709 S1 M1SD6**	455	**F804_1709 P71 BN71B6**	456
0.57	3827	1.3	1585	35000	**F704_1585 S1 M1SD6**	452	**F704_1585 P71 BN71B6**	453
0.57	3810	2.1	1578	45000	**F804_1578 S1 M1SD6**	455	**F804_1578 P71 BN71B6**	456
0.61	3578	1.4	1481	35000	**F704_1481 S1 M1SD6**	452	**F704_1481 P71 BN71B6**	453
0.65	3342	2.4	1384	45000	**F804_1384 S1 M1SD6**	455	**F804_1384 P71 BN71B6**	456
0.66	3303	1.5	1368	35000	**F704_1368 S1 M1SD6**	452	**F704_1368 P71 BN71B6**	453
0.70	3085	2.6	1277	45000	**F804_1277 S1 M1SD6**	455	**F804_1277 P71 BN71B6**	456
0.76	2854	1.8	1182	35000	**F704_1182 S1 M1SD6**	452	**F704_1182 P71 BN71B6**	453
0.79	2757	1.1	1141	20000	**F604_1141 S1 M1SD6**	448	**F604_1141 P71 BN71B6**	449
0.79	2769	2.9	1146	45000	**F804_1146 S1 M1SD6**	455	**F804_1146 P71 BN71B6**	456
0.83	2635	1.9	1091	35000	**F704_1091 S1 M1SD6**	452	**F704_1091 P71 BN71B6**	453
0.85	2545	1.1	1054	20000	**F604_1054 S1 M1SD6**	448	**F604_1054 P71 BN71B6**	449
0.85	2556	3.1	1058	45000	**F804_1058 S1 M1SD6**	455	**F804_1058 P71 BN71B6**	456
0.92	2353	2.1	974.4	35000	**F704_974.4 S1 M1SD6**	452	**F704_974.4 P71 BN71B6**	453
0.94	2316	1.3	958.9	20000	**F604_958.9 S1 M1SD6**	448	**F604_958.9 P71 BN71B6**	449
1.0	2138	1.4	885.1	20000	**F604_885.1 S1 M1SD6**	448	**F604_885.1 P71 BN71B6**	449
1.0	2172	2.3	899.4	35000	**F704_899.4 S1 M1SD6**	452	**F704_899.4 P71 BN71B6**	453
1.1	1996	0.9	826.4	12000	**F514_826.4 S1 M1SD6**	444	**F514_826.4 P71 BN71B6**	445
1.1	1986	2.5	822.2	35000	**F704_822.2 S1 M1SD6**	452	**F704_822.2 P71 BN71B6**	453
1.3	1633	1.1	676.3	12000	**F514_676.3 S1 M1SD6**	444	**F514_676.3 P71 BN71B6**	445
1.4	1600	1.8	662.4	20000	**F604_662.4 S1 M1SD6**	448	**F604_662.4 P71 BN71B6**	449
1.4	1588	3.1	657.4	35000	**F704_657.4 S1 M1SD6**	452	**F704_657.4 P71 BN71B6**	453
1.5	1477	2.0	611.4	20000	**F604_611.4 S1 M1SD6**	448	**F604_611.4 P71 BN71B6**	449
1.5	1466	3.4	606.8	35000	**F704_606.8 S1 M1SD6**	452	**F704_606.8 P71 BN71B6**	453
1.7	1282	0.9	813.8	8500	**F414_813.8 S05 M05C4**	440	**F414_813.8 P71 BN71A4**	441
1.8	1199	0.9	739.4	8500	**F414_739.4 S05 M05C4**	440	**F414_739.4 P71 BN71A4**	441
1.9	1119	1.0	690.1	8500	**F414_690.1 S05 M05C4**	440	**F414_690.1 P71 BN71A4**	441
2.4	892	1.2	549.8	8500	**F414_549.8 S05 M05C4**	440	**F414_549.8 P7 1 BN71A4**	441
2.8	783	2.3	317.3	12000	**F513_317.3 S1 M1SD6**	444	**F513_317.3 P71 BN71B6**	445
3.1	704	1.6	433.7	8500	**F414_433.7 S05 M05C4**	440	**F414_433.7 P71 BN71A4**	441
3.2	679	0.9	418.9	6500	**F314_418.9 S05 M05C4**	436	**F314_418.9 P71 BN71A4**	437
3.7	603	1.0	374.4	6500			**F313_374.4 P71 BN71A4**	437
4.0	555	2.0	344.8	8500			**F413_344.8 P71 BN71A4**	441
4.1	536	1.1	332.8	6500			**F313_332.8 P71 BN71A4**	437
4.7	473	1.3	293.8	6500			**F313_293.8 P71 BN71A4**	437

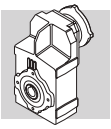

0.25 kW

n_2 min^{-1}	M_2 Nm	S	i	R_{n2} N				
4.7	477	2.3	296.6	8500			**F413_296.6 P71 BN71A4**	441
5.2	425	0.9	256.1	6500	**F253_256.1 S05 M05C4**	432	**F253_256.1 P71 BN71A4**	433
5.2	430	2.6	266.9	8500			**F413_266.9 P71 BN71A4**	441
5.4	408	1.5	253.6	6500			**F313_253.6 P71 BN71A4**	437
5.7	387	2.8	240.1	8500			**F413_240.1 P71 BN71A4**	441
5.9	378	1.1	227.8	6500	**F253_227.8 S05 M05C4**	432	**F253_227.8 P71 BN71A4**	433
6.0	367	1.6	228.2	6500			**F313_228.2 P71 BN71A4**	437
6.3	354	3.1	220.1	8500			**F413_220.1 P71 BN71A4**	441
6.8	326	1.8	202.3	6500			**F313_202.3 P71 BN71A4**	437
6.9	321	1.2	193.6	6500	**F253_193.6 S05 M05C4**	432	**F253_193.6 P71 BN71A4**	433
6.9	320	3.4	198.9	8500			**F413_198.9 P71 BN71A4**	441
7.4	299	2.0	185.4	6500			**F313_185.4 P71 BN71A4**	437
7.7	289	1.4	174.2	6500	**F253_174.2 S05 M05C4**	432	**F253_174.2 P71 BN71A4**	433
8.0	278	0.9	172.6	4000	**F203_172.6 S05 M05C4**	428	**F203_172.6 P71 BN71A4**	429
8.3	268	2.2	166.8	6500			**F313_166.8 P71 BN71A4**	437
8.6	259	1.0	156.3	4000	**F203_156.3 S05 M05C4**	428	**F203_156.3 P71 BN71A4**	429
8.6	259	1.5	155.9	6500	**F253_155.9 S05 M05C4**	432	**F253_155.9 P71 BN71A4**	433
9.2	243	2.5	150.8	6500			**F313_150.8 P71 BN71A4**	437
9.7	230	1.7	143.0	6500	**F253_143.0 S05 M05C4**	432	**F253_143.0 P71 BN71A4**	433
9.8	227	2.6	140.7	6500			**F313_140.7 P71 BN71A4**	437
10.1	224	1.1	132.2	4000	**F202_132.2 S05 M05C4**	428	**F202_132.2 P71 BN71A4**	429
10.5	212	1.9	127.8	6500	**F253_127.8 S05 M05C4**	432	**F253_127.8 P71 BN71A4**	433
10.7	207	2.9	128.4	6500			**F313_128.4 P71 BN71A4**	437
11.7	194	1.3	114.3	4000	**F202_114.3 S05 M05C4**	428	**F202_114.3 P71 BN71A4**	429
12.2	182	2.2	113.0	6500	**F253_113.0 S05 M05C4**	432	**F253_113.0 P71 BN71A4**	433
12.3	181	3.3	112.5	6500			**F313_112.5 P71 BN71A4**	437
12.7	175	2.3	105.4	6500	**F253_105.4 S05 M05C4**	432	**F253_105.4 P71 BN71A4**	433
13.2	172	1.5	101.6	4000	**F202_101.6 S05 M05C4**	428	**F202_101.6 P71 BN71A4**	429
14.0	158	2.5	95.5	6500	**F253_95.5 S05 M05C4**	432	**F253_95.5 P71 BN71A4**	433
14.6	155	0.9	91.5	2800	**F102_91.5 S05 M05C4**	424	**F102_91.5 P71 BN71A4**	425
14.8	153	1.6	90.4	4000	**F202_90.4 S05 M05C4**	428	**F202_90.4 P71 BN71A4**	429
16.1	138	2.9	83.4	6500	**F253_83.4 S05 M05C4**	432	**F253_83.4 P71 BN71A4**	433
16.5	138	1.0	81.3	2800	**F102_81.3 S05 M05C4**	424	**F102_81.3 P71 BN71A4**	425
17.4	130	1.9	76.8	4000	**F202_76.8 S05 M05C4**	428	**F202_76.8 P71 BN71A4**	429
17.5	127	3.2	76.6	6420	**F253_76.6 S05 M05C4**	432	**F253_76.6 P71 BN71A4**	433
18.8	120	1.2	71.1	2800	**F102_71.1 S05 M05C4**	424	**F102_71.1 P71 BN71A4**	425
19.4	117	2.1	69.1	4000	**F202_69.1 S05 M05C4**	428	**F202_69.1 P71 BN71A4**	429
21.3	107	1.3	63.0	2800	**F102_63.0 S05 M05C4**	424	**F102_63.0 P71 BN71A4**	425
21.7	105	2.4	61.9	4000	**F202_61.9 S05 M05C4**	428	**F202_61.9 P71 BN71A4**	429
23.6	96	1.5	56.7	2800	**F102_56.7 S05 M05C4**	424	**F102_56.7 P71 BN71A4**	425
23.6	96	2.6	56.7	4000	**F202_56.7 S05 M05C4**	428	**F202_56.7 P71 BN71A4**	429
26.4	86	2.9	50.7	4000	**F202_50.7 S05 M05C4**	428	**F202_50.7 P71 BN71A4**	429
27.5	83	1.7	48.7	2800	**F102_48.7 S05 M05C4**	424	**F102_48.7 P71 BN71A4**	425
29.9	76	3.3	44.8	3870	**F202_44.8 S05 M05C4**	428	**F202_44.8 P71 BN71A4**	429
30.0	76	1.9	44.7	2800	**F102_44.7 S05 M05C4**	424	**F102_44.7 P71 BN71A4**	425
34	67	2.1	39.6	2800	**F102_39.6 S05 M05C4**	424	**F102_39.6 P71 BN71A4**	425
38	60	2.3	35.3	2800	**F102_35.3 S05 M05C4**	424	**F102_35.3 P71 BN71A4**	425
41	56	2.5	33.0	2800	**F102_33.0 S05 M05C4**	424	**F102_33.0 P71 BN71A4**	425
45	50	2.8	29.6	2800	**F102_29.6 S05 M05C4**	424	**F102_29.6 P71 BN71A4**	425
52	44	3.2	25.8	2750	**F102_25.8 S05 M05C4**	424	**F102_25.8 P71 BN71A4**	425
59	39	3.6	22.8	2650	**F102_22.8 S05 M05C4**	424	**F102_22.8 P71 BN71A4**	425

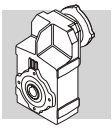

0.25 kW

n_2 min-1	M_2 Nm	S	i	R_{n2} N				
69	33	4.2	19.3	2520	**F102_19.3 S05 M05C4**	424	**F102_19.3 P71 BN71A4**	425
81	28	4.6	17.0	2420	**F102_17.0 S05 M05C4**	424	**F102_17.0 P71 BN71A4**	425
91	25	4.8	14.6	2310	**F102_14.6 S05 M05C4**	424	**F102_14.6 P71 BN71A4**	425
103	22	4.7	13.0	2230	**F102_13.0 S05 M05C4**	424	**F102_13.0 P71 BN71A4**	425
120	19	5.1	11.5	2140	**F102_11.5 S05 M05C4**	424	**F102_11.5 P71 BN71A4**	425
137	17	5.4	9.8	2030	**F102_9.8 S05 M05C4**	424	**F102_9.8 P71 BN71A4**	425
161	14	5.8	8.6	1950	**F102_8.6 S05 M05C4**	424	**F102_8.6 P71 BN71A4**	425
181	13	6.1	7.4	1860	**F102_7.4 S05 M05C4**	424	**F102_7.4 P71 BN71A4**	425
187	12	7.7	14.6	1850	**F102_14.6 S05 M05B2**	424	**F102_14.6 P63 BN63B2**	425
210	11	7.9	13.0	1780	**F102_13.0 S05 M05B2**	424	**F102_13.0 P63 BN63B2**	425
237	10	8.2	11.5	1710	**F102_11.5 S05 M05B2**	424	**F102_11.5 P63 BN63B2**	425
280	8	9.0	9.8	1620	**F102_9.8 S05 M05B2**	424	**F102_9.8 P63 BN63B2**	425
319	7	9.4	8.6	1550	**F102_8.6 S05 M05B2**	424	**F102_8.6 P63 BN63B2**	425
370	6	10.3	7.4	1480	**F102_7.4 S05 M05B2**	424	**F102_7.4 P63 BN63B2**	425

0.37 kW

n_2 min-1	M_2 Nm	S	i	R_{n2} N				
0.46	7024	1.1	1987	45000	**F804_1987 S1 M1LA6**	455	**F804_1987 P80 BN80A6**	456
0.50	6484	1.2	1834	45000	**F804_1834 S1 M1LA6**	455	**F804_1834 P80 BN80A6**	456
0.53	6042	1.3	1709	45000	**F804_1709 S1 M1LA6**	455	**F804_1709 P80 BN80A6**	456
0.57	5602	0.9	1585	35000	**F704_1585 S1 M1LA6**	452	**F704_1585 P80 BN80A6**	453
0.58	5577	1.4	1578	45000	**F804_1578 S1 M1LA6**	455	**F804_1578 P80 BN80A6**	456
0.61	5238	1.0	1481	35000	**F704_1481 S1 M1LA6**	452	**F704_1481 P80 BN80A6**	453
0.63	5137	1.0	2188	35000	**F704_2188 S1 M1SD4**	452	**F704_2188 P71 BN71B4**	453
0.68	4742	1.1	2019	35000	**F704_2019 S1 M1SD4**	452	**F704_2019 P71 BN71B4**	453
0.69	4666	1.7	1987	45000	**F804_1987 S1 M1SD4**	455	**F804_1987 P71 BN71B4**	456
0.75	4307	1.9	1834	45000	**F804_1834 S1 M1SD4**	455	**F804_1834 P71 BN71B4**	456
0.80	4031	1.2	1717	35000	**F704_1717 S1 M1SD4**	452	**F704_1717 P71 BN71B4**	453
0.80	4013	2.0	1709	45000	**F804_1709 S1 M1SD4**	455	**F804_1709 P71 BN71B4**	456
0.86	3721	1.3	1585	35000	**F704_1585 S1 M1SD4**	452	**F704_1585 P71 BN71B4**	453
0.87	3705	2.2	1578	45000	**F804_1578 S1 M1SD4**	455	**F804_1578 P71 BN71B4**	456
0.92	3479	1.4	1481	35000	**F704_1481 S1 M1SD4**	452	**F704_1481 P71 BN71B4**	453
0.99	3250	2.5	1384	45000	**F804_1384 S1 M1SD4**	455	**F804_1384 P71 BN71B4**	456
1.0	3211	1.6	1368	35000	**F704_1368 S1 M1SD4**	452	**F704_1368 P71 BN71B4**	453
1.1	3000	2.7	1277	45000	**F804_1277 S1 M1SD4**	455	**F804_1277 P71 BN71B4**	456
1.2	2680	1.1	1141	20000	**F604_1141 S1 M1SD4**	448	**F604_1141 P71 BN71B4**	449
1.2	2775	1.8	1182	35000	**F704_1182 S1 M1SD4**	452	**F704_1182 P71 BN71B4**	453
1.2	2692	3.0	1146	45000	**F804_1146 S1 M1SD4**	455	**F804_1146 P71 BN71B4**	456
1.3	2474	1.2	1054	20000	**F604_1054 S1 M1SD4**	448	**F604_1054 P71 BN71B4**	449
1.3	2562	2.0	1091	35000	**F704_1091 S1 M1SD4**	452	**F704_1091 P71 BN71B4**	453
1.3	2485	3.2	1058	45000	**F804_1058 S1 M1SD4**	455	**F804_1058 P71 BN71B4**	456
1.4	2252	1.3	958.9	20000	**F604_958.9 S1 M1SD4**	448	**F604_958.9 P71 BN71B4**	449
1.4	2288	2.2	974.4	35000	**F704_974.4 S1 M1SD4**	452	**F704_974.4 P71 BN71B4**	453
1.5	2079	0.9	885.5	12000	**F514_885.5 S1 M1SD4**	444	**F514_885.5 P71 BN71B4**	445
1.5	2078	1.4	885.1	20000	**F604_885.1 S1 M1SD4**	448	**F604_885.1 P71 BN71B4**	449
1.5	2112	2.4	899.4	35000	**F704_899.4 S1 M1SD4**	452	**F704_899.4 P71 BN71B4**	453
1.7	1941	0.9	826.4	12000	**F514_826.4 S1 M1SD4**	444	**F514_826.4 P71 BN71B4**	445

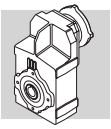

0.37 kW

n_2 min^{-1}	M_2 Nm	S	i	R_{n2} N				
1.7	1931	2.6	822.2	35000	**F704_822.2 S1 M1SD4**	452	**F704_822.2 P71 BN71B4**	453
2.0	1588	1.1	676.3	12000	**F514_676.3 S1 M1SD4**	444	**F514_676.3 P71 BN71B4**	445
2.1	1556	1.9	662.4	20000	**F604_662.4 S1 M1SD4**	448	**F604_662.4 P71 BN71B4**	449
2.1	1544	3.2	657.4	35000	**F704_657.4 S1 M1SD4**	452	**F704_657.4 P71 BN71B4**	453
2.2	1436	2.0	611.4	20000	**F604_611.4 S1 M1SD4**	448	**F604_611.4 P71 BN71B4**	449
2.3	1425	3.5	606.8	35000	**F704_606.8 S1 M1SD4**	452	**F704_606.8 P71 BN71B4**	453
2.5	1291	0.9	549.8	8500	**F414_549.8 S1 M1SD4**	440	**F414_549.8 P71 BN71B4**	441
2.6	1246	1.4	530.5	12000	**F514_530.5 S1 M1SD4**	444	**F514_530.5 P71 BN71B4**	445
2.6	1246	2.3	530.7	20000	**F604_530.7 S1 M1SD4**	448	**F604_530.7 P71 BN71B4**	449
2.8	1150	2.5	489.8	20000	**F604_489.8 S1 M1SD4**	448	**F604_489.8 P71 BN71B4**	449
3.2	1018	1.1	433.7	8500	**F414_433.7 S1 M1SD4**	440	**F414_433.7 P71 BN71B4**	441
3.2	1008	1.8	429.1	12000	**F514_429.1 S1 M1SD4**	444	**F514_429.1 P71 BN71B4**	445
3.2	1016	2.9	432.6	20000	**F604_432.6 S1 M1SD4**	448	**F604_432.6 P71 BN71B4**	449
3.4	938	3.1	399.3	20000	**F604_399.3 S1 M1SD4**	448	**F604_399.3 P71 BN71B4**	449
3.9	846	2.1	352.5	12000	**F513_352.5 S1 M1SD4**	444	**F513_352.5 P71 BN71B4**	445
4.0	827	1.3	344.8	8500	**F413_344.8 S1 M1SD4**	440	**F413_344.8 P71 BN71B4**	441
4.3	761	2.4	317.3	12000	**F513_317.3 S1 M1SD4**	444	**F513_317.3 P71 BN71B4**	445
4.6	712	1.5	296.6	8500	**F413_296.6 S1 M1SD4**	440	**F413_296.6 P71 BN71B4**	441
4.8	686	2.6	285.9	12000	**F513_285.9 S1 M1SD4**	444	**F513_285.9 P71 BN71B4**	445
5.1	641	1.7	266.9	8500	**F413_266.9 S1 M1SD4**	440	**F413_266.9 P71 BN71B4**	441
5.2	629	2.9	262.1	12000	**F513_262.1 S1 M1SD4**	444	**F513_262.1 P71 BN71B4**	445
5.4	609	1.0	253.6	6500	**F313_253.6 S1 M1SD4**	436	**F313_253.6 P71 BN71B4**	437
5.7	576	1.9	240.1	8500	**F413_240.1 S1 M1SD4**	440	**F413_240.1 P71 BN71B4**	441
5.7	576	3.1	239.8	12000	**F513_239.8 S1 M1SD4**	444	**F513_239.8 P71 BN71B4**	445
6.0	548	1.1	228.2	6500	**F313_228.2 S1 M1SD4**	436	**F313_228.2 P71 BN71B4**	437
6.2	528	2.1	220.1	8500	**F413_220.1 S1 M1SD4**	440	**F413_220.1 P71 BN71B4**	441
6.3	520	3.5	216.9	12000	**F513_216.9 S1 M1SD4**	444	**F513_216.9 P71 BN71B4**	445
6.8	485	1.2	202.3	6500	**F313_202.3 S1 M1SD4**	436	**F313_202.3 P71 BN71B4**	437
6.9	477	2.3	198.9	8500	**F413_198.9 S1 M1SD4**	440	**F413_198.9 P71 BN71B4**	441
7.4	445	1.3	185.4	6500	**F313_185.4 S1 M1SD4**	436	**F313_185.4 P71 BN71B4**	437
7.6	434	2.5	180.7	8500	**F413_180.7 S1 M1SD4**	440	**F413_180.7 P71 BN71B4**	441
7.9	418	1.0	174.2	6500	**F253_174.2 S1 M1SD4**	432	**F253_174.2 P71 BN71B4**	433
8.1	405	2.7	168.7	8500	**F413_168.7 S1 M1SD4**	440	**F413_168.7 P71 BN71B4**	441
8.2	400	1.5	166.8	6500	**F313_166.8 S1 M1SD4**	436	**F313_166.8 P71 BN71B4**	437
8.8	374	1.1	155.9	6500	**F253_155.9 S1 M1SD4**	432	**F253_155.9 P71 BN71B4**	433
9.1	362	1.7	150.8	6500	**F313_150.8 S1 M1SD4**	436	**F313_150.8 P71 BN71B4**	437
9.6	343	1.2	143.0	6500	**F253_143.0 S1 M1SD4**	432	**F253_143.0 P71 BN71B4**	433
9.7	338	1.8	140.7	6500	**F313_140.7 S1 M1SD4**	436	**F313_140.7 P71 BN71B4**	437
10.2	323	3.4	134.4	8500	**F413_134.4 S1 M1SD4**	440	**F413_134.4 P71 BN71B4**	441
10.7	307	1.3	127.8	6500	**F253_127.8 S1 M1SD4**	432	**F253_127.8 P71 BN71B4**	433
10.7	308	1.9	128.4	6500	**F313_128.4 S1 M1SD4**	436	**F313_128.4 P71 BN71B4**	437
12.1	271	1.5	113.0	6500	**F253_113.0 S1 M1SD4**	432	**F253_113.0 P71 BN71B4**	433
12.2	270	2.2	112.5	6500	**F313_112.5 S1 M1SD4**	436	**F313_112.5 P71 BN71B4**	437
13.0	253	1.6	105.4	6500	**F253_105.4 S1 M1SD4**	432	**F253_105.4 P71 BN71B4**	433
13.4	245	2.5	101.9	6500	**F313_101.9 S1 M1SD4**	436	**F313_101.9 P71 BN71B4**	437
13.5	249	1.0	101.6	4000			**F202_101.6 P71 BN71B4**	429
14.3	229	1.7	95.5	6490	**F253_95.5 S1 M1SD4**	432	**F253_95.5 P71 BN71B4**	433
15.2	222	1.1	90.4	4000	**F202_90.4 S1 M1SD4**	428	**F202_90.4 P71 BN71B4**	429
15.7	210	2.9	87.4	6500	**F313_87.4 S1 M1SD4**	436	**F313_87.4 P71 BN71B4**	437
16.4	200	2.0	83.4	6280	**F253_83.4 S1 M1SD4**	432	**F253_83.4 P71 BN71B4**	433
17.4	189	3.2	78.9	6500	**F313_78.9 S1 M1SD4**	436	**F313_78.9 P71 BN71B4**	437

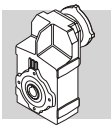

0.37 kW

n_2 min^{-1}	M_2 Nm	S	i	R_{n2} N				
17.8	188	1.3	76.8	4000	**F202_76.8 S1 M1SD4**	428	**F202_76.8 P71 BN71B4**	429
17.9	184	2.2	76.6	6160	**F253_76.6 S1 M1SD4**	432	**F253_76.6 P71 BN71B4**	433
19.8	169	1.5	69.1	4000	**F202_69.1 S1 M1SD4**	428	**F202_69.1 P71 BN71B4**	429
21.0	157	2.6	65.3	5920	**F253_65.3 S1 M1SD4**	432	**F253_65.3 P71 BN71B4**	433
21.7	154	0.9	63.0	2800	**F102_63.0 S1 M1SD4**	424	**F102_63.0 P71 BN71B4**	425
22.1	152	1.6	61.9	4000	**F202_61.9 S1 M1SD4**	428	**F202_61.9 P71 BN71B4**	429
23.5	140	2.9	58.3	5750	**F253_58.3 S1 M1SD4**	432	**F253_58.3 P71 BN71B4**	433
24.2	139	1.0	56.7	2800	**F102_56.7 S1 M1SD4**	424	**F102_56.7 P71 BN71B4**	425
24.2	139	1.8	56.7	4000	**F202_56.7 S1 M1SD4**	428	**F202_56.7 P71 BN71B4**	429
27.0	124	2.0	50.7	3900	**F202_50.7 S1 M1SD4**	428	**F202_50.7 P71 BN71B4**	429
27.0	122	3.3	50.8	5540	**F253_50.8 S1 M1SD4**	432	**F253_50.8 P71 BN71B4**	433
28.1	119	1.2	48.7	2800	**F102_48.7 S1 M1SD4**	424	**F102_48.7 P71 BN71B4**	425
31	110	1.3	44.7	2800	**F102_44.7 S1 M1SD4**	424	**F102_44.7 P71 BN71B4**	425
31	110	2.3	44.8	3770	**F202_44.8 S1 M1SD4**	428	**F202_44.8 P71 BN71B4**	429
31	109	3.5	44.4	5370	**F252_44.4 S1 M1SD4**	432	**F252_44.4 P71 BN71B4**	433
33	103	2.4	41.8	3700	**F202_41.8 S1 M1SD4**	428	**F202_41.8 P71 BN71B4**	429
35	97	1.4	39.6	2800	**F102_39.6 S1 M1SD4**	424	**F102_39.6 P71 BN71B4**	425
36	93	2.7	37.9	3600	**F202_37.9 S1 M1SD4**	428	**F202_37.9 P71 BN71B4**	429
39	87	1.6	35.3	2800	**F102_35.3 S1 M1SD4**	424	**F102_35.3 P71 BN71B4**	425
41	81	3.1	33.1	3460	**F202_33.1 S1 M1SD4**	428	**F202_33.1 P71 BN71B4**	429
42	81	1.7	33.0	2800	**F102_33.0 S1 M1SD4**	424	**F102_33.0 P71 BN71B4**	425
45	75	3.4	30.4	3380	**F202_30.4 S1 M1SD4**	428	**F202_30.4 P71 BN71B4**	429
46	73	1.9	29.6	2800	**F102_29.6 S1 M1SD4**	424	**F102_29.6 P71 BN71B4**	425
53	63	2.2	25.8	2690	**F102_25.8 S1 M1SD4**	424	**F102_25.8 P71 BN71B4**	425
60	56	2.5	22.8	2600	**F102_22.8 S1 M1SD4**	424	**F102_22.8 P71 BN71B4**	425
71	47	2.9	19.3	2470	**F102_19.3 S1 M1SD4**	424	**F102_19.3 P71 BN71B4**	425
81	42	3.1	17.0	2380	**F102_17.0 S1 M1SD4**	424	**F102_17.0 P71 BN71B4**	425
94	36	3.3	14.6	2280	**F102_14.6 S1 M1SD4**	424	**F102_14.6 P71 BN71B4**	425
105	32	3.3	13.0	2200	**F102_13.0 S1 M1SD4**	424	**F102_13.0 P71 BN71B4**	425
119	28	3.4	11.5	2120	**F102_11.5 S1 M1SD4**	424	**F102_11.5 P71 BN71B4**	425
140	24	3.7	9.8	2010	**F102_9.8 S1 M1SD4**	424	**F102_9.8 P71 BN71B4**	425
160	21	3.9	8.6	1930	**F102_8.6 S1 M1SD4**	424	**F102_8.6 P71 BN71B4**	425
185	18	4.2	7.4	1850	**F102_7.4 S1 M1SD4**	424	**F102_7.4 P71 BN71B4**	425
193	17	5.4	14.6	1830	**F102_14.6 S05 M05C2**	424	**F102_14.6 P71 BN71A2**	425
216	16	5.5	13.0	1760	**F102_13.0 S05 M05C2**	424	**F102_13.0 P71 BN71A2**	425
244	14	5.7	11.5	1690	**F102_11.5 S05 M05C2**	424	**F102_11.5 P71 BN71A2**	425
289	12	6.3	9.8	1610	**F102_9.8 S05 M05C2**	424	**F102_9.8 P71 BN71A2**	425
329	10	6.6	8.6	1540	**F102_8.6 S05 M05C2**	424	**F102_8.6 P71 BN71A2**	425
381	9	7.1	7.4	1470	**F102_7.4 S05 M05C2**	424	**F102_7.4 P71 BN71A2**	425

0.55 kW

n_2	M_2	S	i	R_{n2}				
0.44	10909	1.3	2099	55000	**F904_2099 S2 M2SA6**	458	**F904_2099 P80 BN80B6**	459
0.47	10070	1.4	1937	55000	**F904_1937 S2 M2SA6**	458	**F904_1937 P80 BN80B6**	459
0.54	8884	0.9	1709	45000	**F804_1709 S2 M2SA6**	455	**F804_1709 P80 BN80B6**	456
0.54	8849	1.6	1702	55000	**F904_1702 S2 M2SA6**	458	**F904_1702 P80 BN80B6**	459
0.58	8201	1.0	1578	45000	**F804_1578 S2 M2SA6**	455	**F804_1578 P80 BN80B6**	456

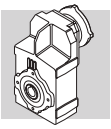

0.55 kW

n_2	M_2	S	i	R_{n2}				
0.59	8168	1.7	1571	55000	**F904_1571 S2 M2SA6**	458	**F904_1571 P80 BN80B6**	459
0.64	7422	1.9	1428	55000	**F904_1428 S2 M2SA6**	458	**F904_1428 P80 BN80B6**	459
0.66	7193	1.1	1384	45000	**F804_1384 S2 M2SA6**	455	**F804_1384 P80 BN80B6**	456
0.69	6885	1.2	1987	45000	**F804_1987 S1 M1LA4**	455	**F804_1987 P80 BN80A4**	456
0.75	6356	1.3	1834	45000	**F804_1834 S1 M1LA4**	455	**F804_1834 P80 BN80A4**	456
0.81	5923	1.4	1709	45000	**F804_1709 S1 M1LA4**	455	**F804_1709 P80 BN80A4**	456
0.87	5491	0.9	1585	35000	**F704_1585 S1 M1LA4**	452	**F704_1585 P80 BN80A4**	453
0.87	5467	1.5	1578	45000	**F804_1578 S1 M1LA4**	455	**F804_1578 P80 BN80A4**	456
0.93	5134	1.0	1481	35000	**F704_1481 S1 M1LA4**	452	**F704_1481 P80 BN80A4**	453
1.0	4739	1.1	1368	35000	**F704_1368 S1 M1LA4**	452	**F704_1368 P80 BN80A4**	453
1.0	4795	1.7	1384	45000	**F804_1384 S1 M1LA4**	455	**F804_1384 P80 BN80A4**	456
1.1	4427	1.8	1277	45000	**F804_1277 S1 M1LA4**	455	**F804_1277 P80 BN80A4**	456
1.2	4095	1.2	1182	35000	**F704_1182 S1 M1LA4**	452	**F704_1182 P80 BN80A4**	453
1.2	3972	2.0	1146	45000	**F804_1146 S1 M1LA4**	455	**F804_1146 P80 BN80A4**	456
1.3	3780	1.3	1091	35000	**F704_1091 S1 M1LA4**	452	**F704_1091 P80 BN80A4**	453
1.3	3667	2.2	1058	45000	**F804_1058 S1 M1LA4**	455	**F804_1058 P80 BN80A4**	456
1.4	3323	0.9	958.9	20000	**F604_958.9 S1 M1LA4**	448	**F604_958.9 P80 BN80A4**	449
1.4	3377	1.5	974.4	35000	**F704_974.4 S1 M1LA4**	452	**F704_974.4 P80 BN80A4**	453
1.5	3117	1.6	899.4	35000	**F704_899.4 S1 M1LA4**	452	**F704_899.4 P80 BN80A4**	453
1.5	3109	2.6	897.3	45000	**F804_897.3 S1 M1LA4**	455	**F804_897.3 P80 BN80A4**	456
1.6	3067	0.9	885.1	20000	**F604_885.1 S1 M1LA4**	448	**F604_885.1 P80 BN80A4**	449
1.7	2849	1.8	822.2	35000	**F704_822.2 S1 M1LA4**	452	**F704_822.2 P80 BN80A4**	453
1.8	2684	3.0	774.4	45000	**F804_774.4 S1 M1LA4**	455	**F804_774.4 P80 BN80A4**	456
1.9	2477	3.2	714.9	45000	**F804_714.9 S1 M1LA4**	455	**F804_714.9 P80 BN80A4**	456
2.1	2295	1.3	662.4	20000	**F604_662.4 S1 M1LA4**	448	**F604_662.4 P80 BN80A4**	449
2.1	2278	2.2	657.4	35000	**F704_657.4 S1 M1LA4**	452	**F704_657.4 P80 BN80A4**	453
2.3	2119	1.4	611.4	20000	**F604_611.4 S1 M1LA4**	448	**F604_611.4 P80 BN80A4**	449
2.3	2103	2.4	606.8	35000	**F704_606.8 S1 M1LA4**	452	**F704_606.8 P80 BN80A4**	453
2.6	1838	1.0	530.5	12000	**F514_530.5 S1 M1LA4**	444	**F514_530.5 P80 BN80A4**	445
2.6	1839	1.6	530.7	20000	**F604_530.7 S1 M1LA4**	448	**F604_530.7 P80 BN80A4**	449
2.7	1769	2.8	510.4	35000	**F704_510.4 S1 M1LA4**	452	**F704_510.4 P80 BN80A4**	453
2.8	1698	1.7	489.8	20000	**F604_489.8 S1 M1LA4**	448	**F604_489.8 P80 BN80A4**	449
2.9	1633	3.1	471.2	35000	**F704_471.2 S1 M1LA4**	452	**F704_471.2 P80 BN80A4**	453
3.2	1487	1.2	429.1	12000	**F514_429.1 S1 M1LA4**	444	**F514_429.1 P80 BN80A4**	445
3.2	1499	1.9	432.6	20000	**F604_432.6 S1 M1LA4**	448	**F604_432.6 P80 BN80A4**	449
3.5	1384	2.1	399.3	20000	**F604_399.3 S1 M1LA4**	448	**F604_399.3 P80 BN80A4**	449
3.9	1248	1.4	352.5	12000	**F513_352.5 S1 M1LA4**	444	**F513_352.5 P80 BN80A4**	445
4.0	1221	0.9	344.8	8500	**F413_344.8 S1 M1LA4**	440	**F413_344.8 P80 BN80A4**	441
4.0	1184	2.4	341.7	20000	**F604_341.7 S1 M1LA4**	448	**F604_341.7 P80 BN80A4**	449
4.3	1124	1.6	317.3	12000	**F513_317.3 S1 M1LA4**	444	**F513_317.3 P80 BN80A4**	445
4.4	1093	2.7	315.4	20000	**F604_315.4 S1 M1LA4**	448	**F604_315.4 P80 BN80A4**	449
4.7	1050	1.0	296.6	8500	**F413_296.6 S1 M1LA4**	440	**F413_296.6 P80 BN80A4**	441
4.8	1013	1.8	285.9	12000	**F513_285.9 S1 M1LA4**	444	**F513_285.9 P80 BN80A4**	445
5.2	945	1.2	266.9	8500	**F413_266.9 S1 M1LA4**	440	**F413_266.9 P80 BN80A4**	441
5.3	928	1.9	262.1	12000	**F513_262.1 S1 M1LA4**	444	**F513_262.1 P80 BN80A4**	445
5.7	850	1.3	240.1	8500	**F413_240.1 S1 M1LA4**	440	**F413_240.1 P80 BN80A4**	441
5.8	849	2.1	239.8	12000	**F513_239.8 S1 M1LA4**	444	**F513_239.8 P80 BN80A4**	445
6.3	780	1.4	220.1	8500	**F413_220.1 S1 M1LA4**	440	**F413_220.1 P80 BN80A4**	441
6.4	768	2.3	216.9	12000	**F513_216.9 S1 M1LA4**	444	**F513_216.9 P80 BN80A4**	445
6.8	717	2.5	202.4	12000	**F513_202.4 S1 M1LA4**	444	**F513_202.4 P80 BN80A4**	445
6.9	704	1.6	198.9	8500	**F413_198.9 S1 M1LA4**	440	**F413_198.9 P80 BN80A4**	441

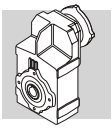

0.55 kW

n_2	M_2	S	i	R_{n2}				
7.4	657	0.9	185.4	6500	**F313_185.4 S1 M1LA4**	436	**F313_185.4 P80 BN80A4**	437
7.6	640	1.7	180.7	8500	**F413_180.7 S1 M1LA4**	440	**F413_180.7 P80 BN80A4**	441
8.2	597	1.8	168.7	8500	**F413_168.7 S1 M1LA4**	440	**F413_168.7 P80 BN80A4**	441
8.3	591	1.0	166.8	6500	**F313_166.8 S1 M1LA4**	436	**F313_166.8 P80 BN80A4**	437
8.3	587	3.1	165.6	12000	**F513_165.6 S1 M1LA4**	444	**F513_165.6 P80 BN80A4**	445
9.2	534	1.1	150.8	6500	**F313_150.8 S1 M1LA4**	436	**F313_150.8 P80 BN80A4**	437
9.8	498	1.2	140.7	6500	**F313_140.7 S1 M1LA4**	436	**F313_140.7 P80 BN80A4**	437
10.3	476	2.3	134.4	8500	**F413_134.4 S1 M1LA4**	440	**F413_134.4 P80 BN80A4**	441
10.7	455	1.3	128.4	6500	**F313_128.4 S1 M1LA4**	436	**F313_128.4 P80 BN80A4**	437
12.2	400	1.0	113.0	6130	**F253_113.0 S1 M1LA4**	432	**F253_113.0 P80 BN80A4**	433
12.3	399	1.5	112.5	6500	**F313_112.5 S1 M1LA4**	436	**F313_112.5 P80 BN80A4**	437
13.0	375	2.9	106.0	8500	**F413_106.0 S1 M1LA4**	440	**F413_106.0 P80 BN80A4**	441
13.1	373	1.1	105.4	6070	**F253_105.4 S1 M1LA4**	432	**F253_105.4 P80 BN80A4**	433
13.5	361	1.7	101.9	6500	**F313_101.9 S1 M1LA4**	436	**F313_101.9 P80 BN80A4**	437
14.5	338	1.2	95.5	5980	**F253_95.5 S1 M1LA4**	432	**F253_95.5 P80 BN80A4**	433
15.8	309	1.9	87.4	6500	**F313_87.4 S1 M1LA4**	436	**F313_87.4 P80 BN80A4**	437
16.5	295	1.4	83.4	5840	**F253_83.4 S1 M1LA4**	432	**F253_83.4 P80 BN80A4**	433
17.5	279	2.1	78.9	6500	**F313_78.9 S1 M1LA4**	436	**F313_78.9 P80 BN80A4**	437
18.0	278	0.9	76.8	4000	**F202_76.8 S1 M1LA4**	428	**F202_76.8 P80 BN80A4**	429
18.0	271	1.5	76.6	5750	**F253_76.6 S1 M1LA4**	432	**F253_76.6 P80 BN80A4**	433
20.0	250	1.0	69.1	3980	**F202_69.1 S1 M1LA4**	428	**F202_69.1 P80 BN80A4**	429
20.0	245	2.5	69.1	6500	**F313_69.1 S1 M1LA4**	436	**F313_69.1 P80 BN80A4**	437
21.1	231	1.7	65.3	5570	**F253_65.3 S1 M1LA4**	432	**F253_65.3 P80 BN80A4**	433
22.1	221	2.7	62.8	6500			**F313_62.8 P80 BN80A4**	437
22.3	224	1.1	61.9	3890	**F202_61.9 S1 M1LA4**	428	**F202_61.9 P80 BN80A4**	429
23.7	207	1.9	58.3	5430	**F253_58.3 S1 M1LA4**	432	**F253_58.3 P80 BN80A4**	433
24.3	205	1.2	56.7	3810	**F202_56.7 S1 M1LA4**	428	**F202_56.7 P80 BN80A4**	429
26.7	183	3.3	52.1	6500			**F313_52.1 P80 BN80A4**	437
27.2	184	1.4	50.7	3720	**F202_50.7 S1 M1LA4**	428	**F202_50.7 P80 BN80A4**	429
27.2	180	2.2	50.8	5270	**F253_50.8 S1 M1LA4**	432	**F253_50.8 P80 BN80A4**	433
29.2	167	3.5	47.5	6500			**F313_47.5 P80 BN80A4**	437
31	162	1.5	44.8	3610	**F202_44.8 S1 M1LA4**	428	**F202_44.8 P80 BN80A4**	429
31	161	2.4	44.4	5140	**F252_44.4 S1 M1LA4**	432	**F252_44.4 P80 BN80A4**	433
31	160	2.5	45.6	5130			**F253_45.6 P80 BN80A4**	433
33	151	1.7	41.8	3550	**F202_41.8 S1 M1LA4**	428	**F202_41.8 P80 BN80A4**	429
34	147	2.5	40.7	5030	**F252_40.7 S1 M1LA4**	432	**F252_40.7 P80 BN80A4**	433
35	143	1.0	39.6	2800	**F102_39.6 S1 M1LA4**	424	**F102_39.6 P80 BN80A4**	425
36	137	1.8	37.9	3460	**F202_37.9 S1 M1LA4**	428	**F202_37.9 P80 BN80A4**	429
38	132	3.0	36.4	4890	**F252_36.4 S1 M1LA4**	432	**F252_36.4 P80 BN80A4**	433
39	128	1.1	35.3	2800	**F102_35.3 S1 M1LA4**	424	**F102_35.3 P80 BN80A4**	425
42	119	1.2	33.0	2750	**F102_33.0 S1 M1LA4**	424	**F102_33.0 P80 BN80A4**	425
42	120	2.1	33.1	3340	**F202_33.1 S1 M1LA4**	428	**F202_33.1 P80 BN80A4**	429
43	116	3.4	32.2	4730	**F252_32.2 S1 M1LA4**	432	**F252_32.2 P80 BN80A4**	433
45	110	2.3	30.4	3260	**F202_30.4 S1 M1LA4**	428	**F202_30.4 P80 BN80A4**	429
47	107	1.3	29.6	2680	**F102_29.6 S1 M1LA4**	424	**F102_29.6 P80 BN80A4**	425
53	94	2.6	25.9	3130	**F202_25.9 S1 M1LA4**	428	**F202_25.9 P80 BN80A4**	429
54	93	1.5	25.8	2590	**F102_25.8 S1 M1LA4**	424	**F102_25.8 P80 BN80A4**	425
60	83	1.7	22.8	2510	**F102_22.8 S1 M1LA4**	424	**F102_22.8 P80 BN80A4**	425
60	84	2.8	23.1	3030	**F202_23.1 S1 M1LA4**	428	**F202_23.1 P80 BN80A4**	429
68	73	3.1	20.2	2910	**F202_20.2 S1 M1LA4**	428	**F202_20.2 P80 BN80A4**	429
71	70	1.9	19.3	2400	**F102_19.3 S1 M1LA4**	424	**F102_19.3 P80 BN80A4**	425

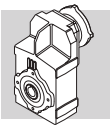

0.55 kW

n_2	M_2	S	i	R_{n2}				
77	65	3.3	18.1	2820	**F202_18.1 S1 M1LA4**	428	**F202_18.1 P80 BN80A4**	429
81	61	2.1	17.0	2310	**F102_17.0 S1 M1LA4**	424	**F102_17.0 P80 BN80A4**	425
94	53	2.2	14.6	2220	**F102_14.6 S1 M1LA4**	424	**F102_14.6 P80 BN80A4**	425
106	47	2.2	13.0	2140	**F102_13.0 S1 M1LA4**	424	**F102_13.0 P80 BN80A4**	425
120	42	2.3	11.5	2070	**F102_11.5 S1 M1LA4**	424	**F102_11.5 P80 BN80A4**	425
141	35	2.5	9.8	1970	**F102_9.8 S1 M1LA4**	424	**F102_9.8 P80 BN80A4**	425
161	31	2.6	8.6	1890	**F102_8.6 S1 M1LA4**	424	**F102_8.6 P80 BN80A4**	425
186	27	2.8	7.4	1810	**F102_7.4 S1 M1LA4**	424	**F102_7.4 P80 BN80A4**	425
193	26	3.6	14.6	1800	**F102_14.6 S1 M1SD2**	424	**F102_14.6 P71 BN71B2**	425
216	23	3.7	13.0	1730	**F102_13.0 S1 M1SD2**	424	**F102_13.0 P71 BN71B2**	425
244	20	3.8	11.5	1670	**F102_11.5 S1 M1SD2**	424	**F102_11.5 P71 BN71B2**	425
289	17	4.2	9.8	1590	**F102_9.8 S1 M1SD2**	424	**F102_9.8 P71 BN71B2**	425
329	15	4.4	8.6	1530	**F102_8.6 S1 M1SD2**	424	**F102_8.6 P71 BN71B2**	425
381	13	4.8	7.4	1460	**F102_7.4 S1 M1SD2**	424	**F102_7.4 P71 BN71B2**	425

0.75 kW

n_2 min^{-1}	M_2 Nm	S	i	R_{n2} N				
0.44	14876	0.9	2099	55000	**F904_2099 S2 M2SB6**	458	**F904_2099 P90 BN90S6**	459
0.47	13732	1.0	1937	55000	**F904_1937 S2 M2SB6**	458	**F904_1937 P90 BN90S6**	459
0.54	12067	1.2	1702	55000	**F904_1702 S2 M2SB6**	458	**F904_1702 P90 BN90S6**	459
0.59	11138	1.3	1571	55000	**F904_1571 S2 M2SB6**	458	**F904_1571 P90 BN90S6**	459
0.64	10121	1.4	1428	55000	**F904_1428 S2 M2SB6**	458	**F904_1428 P90 BN90S6**	459
0.67	9776	1.4	2099	55000	**F904_2099 S2 M2SA4**	458	**F904_2099 P80 BN80B4**	459
0.70	9255	0.9	1987	45000	**F804_1987 S2 M2SA4**	455	**F804_1987 P80 BN80B4**	456
0.72	9024	1.6	1937	55000	**F904_1937 S2 M2SA4**	458	**F904_1937 P80 BN80B4**	459
0.76	8543	0.9	1834	45000	**F804_1834 S2 M2SA4**	455	**F804_1834 P80 BN80B4**	456
0.82	7961	1.0	1709	45000	**F804_1709 S2 M2SA4**	455	**F804_1709 P80 BN80B4**	456
0.82	7930	1.8	1702	55000	**F904_1702 S2 M2SA4**	458	**F904_1702 P80 BN80B4**	459
0.89	7349	1.1	1578	45000	**F804_1578 S2 M2SA4**	455	**F804_1578 P80 BN80B4**	456
0.89	7320	1.9	1571	55000	**F904_1571 S2 M2SA4**	458	**F904_1571 P80 BN80B4**	459
0.98	6651	2.1	1428	55000	**F904_1428 S2 M2SA4**	458	**F904_1428 P80 BN80B4**	459
1.0	6446	1.2	1384	45000	**F804_1384 S2 M2SA4**	455	**F804_1384 P80 BN80B4**	456
1.1	5950	1.3	1277	45000	**F804_1277 S2 M2SA4**	455	**F804_1277 P80 BN80B4**	456
1.1	6140	2.3	1318	55000	**F904_1318 S2 M2SA4**	458	**F904_1318 P80 BN80B4**	459
1.2	5505	0.9	1182	35000	**F704_1182 S2 M2SA4**	452	**F704_1182 P80 BN80B4**	453
1.2	5339	1.5	1146	45000	**F804_1146 S2 M2SA4**	455	**F804_1146 P80 BN80B4**	456
1.2	5613	2.5	1205	55000	**F904_1205 S2 M2SA4**	458	**F904_1205 P80 BN80B4**	459
1.3	5082	1.0	1091	35000	**F704_1091 S2 M2SA4**	452	**F704_1091 P80 BN80B4**	453
1.3	4929	1.6	1058	45000	**F804_1058 S2 M2SA4**	455	**F804_1058 P80 BN80B4**	456
1.3	5181	2.7	1112	55000	**F904_1112 S2 M2SA4**	458	**F904_1112 P80 BN80B4**	459
1.4	4539	1.1	974.4	35000	**F704_974.4 S2 M2SA4**	452	**F704_974.4 P80 BN80B4**	453
1.5	4240	3.3	910.2	55000	**F904_910.2 S2 M2SA4**	458	**F904_910.2 P80 BN80B4**	459
1.6	4190	1.2	899.4	35000	**F704_899.4 S2 M2SA4**	452	**F704_899.4 P80 BN80B4**	453
1.6	4180	1.9	897.3	45000	**F804_897.3 S2 M2SA4**	455	**F804_897.3 P80 BN80B4**	456
1.7	3830	1.3	822.2	35000	**F704_822.2 S2 M2SA4**	452	**F704_822.2 P80 BN80B4**	453
1.8	3607	2.2	774.4	45000	**F804_774.4 S2 M2SA4**	455	**F804_774.4 P80 BN80B4**	456
2.0	3330	2.4	714.9	45000	**F804_714.9 S2 M2SA4**	455	**F804_714.9 P80 BN80B4**	456

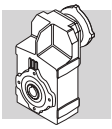

0.75 kW

n_2 min^{-1}	M_2 Nm	S	i	R_{n2} N				
2.1	3085	0.9	662.4	20000	**F604_662.4 S2 M2SA4**	448	**F604_662.4 P80 BN80B4**	449
2.1	3062	1.6	657.4	35000	**F704_657.4 S2 M2SA4**	452	**F704_657.4 P80 BN80B4**	453
2.3	2848	1.0	611.4	20000	**F604_611.4 S2 M2SA4**	448	**F604_611.4 P80 BN80B4**	449
2.3	2827	1.8	606.8	35000	**F704_606.8 S2 M2SA4**	452	**F704_606.8 P80 BN80B4**	453
2.3	2845	2.8	610.9	45000	**F804_610.9 S2 M2SA4**	455	**F804_610.9 P80 BN80B4**	456
2.5	2627	3.0	563.9	45000	**F804_563.9 S2 M2SA4**	455	**F804_563.9 P80 BN80B4**	456
2.6	2472	1.2	530.7	20000	**F604_530.7 S2 M2SA4**	448	**F604_530.7 P80 BN80B4**	449
2.7	2378	2.1	510.4	35000	**F704_510.4 S2 M2SA4**	452	**F704_510.4 P80 BN80B4**	453
2.9	2282	1.3	489.8	20000	**F604_489.8 S2 M2SA4**	448	**F604_489.8 P80 BN80B4**	449
2.9	2278	3.5	489.1	45000	**F804_489.1 S2 M2SA4**	455	**F804_489.1 P80 BN80B4**	456
3.0	2195	2.3	471.2	35000	**F704_471.2 S2 M2SA4**	452	**F704_471.2 P80 BN80B4**	453
3.2	2015	1.4	432.6	20000	**F604_432.6 S2 M2SA4**	448	**F604_432.6 P80 BN80B4**	449
3.3	1999	0.9	429.1	12000	**F514_429.1 S2 M2SA4**	444	**F514_429.1 P80 BN80B4**	445
3.5	1860	1.6	399.3	20000	**F604_399.3 S2 M2SA4**	448	**F604_399.3 P80 BN80B4**	449
3.5	1880	2.7	403.5	35000	**F704_403.5 S2 M2SA4**	452	**F704_403.5 P80 BN80B4**	453
3.8	1735	2.9	372.5	35000	**F704_372.5 S2 M2SA4**	452	**F704_372.5 P80 BN80B4**	453
4.0	1678	1.1	352.5	12000	**F513_352.5 S2 M2SA4**	444	**F513_352.5 P80 BN80B4**	445
4.1	1592	1.8	341.7	20000	**F604_341.7 S2 M2SA4**	448	**F604_341.7 P80 BN80B4**	449
4.4	1510	1.2	317.3	12000	**F513_317.3 S2 M2SA4**	444	**F513_317.3 P80 BN80B4**	445
4.4	1469	2.0	315.4	20000	**F604_315.4 S2 M2SA4**	448	**F604_315.4 P80 BN80B4**	449
4.6	1418	3.5	304.3	35000	**F704_304.3 S2 M2SA4**	452	**F704_304.3 P80 BN80B4**	453
4.9	1361	1.3	285.9	12000	**F513_285.9 S2 M2SA4**	444	**F513_285.9 P80 BN80B4**	445
5.0	1335	2.2	280.7	20000	**F603_280.7 S2 M2SA4**	448	**F603_280.7 P80 BN80B4**	449
5.3	1248	1.4	262.1	12000	**F513_262.1 S2 M2SA4**	444	**F513_262.1 P80 BN80B4**	445
5.4	1233	2.4	259.1	20000	**F603_259.1 S2 M2SA4**	448	**F603_259.1 P80 BN80B4**	449
5.8	1143	1.0	240.1	8500	**F413_240.1 S2 M2SA4**	440	**F413_240.1 P80 BN80B4**	441
5.8	1142	1.6	239.8	12000	**F513_239.8 S2 M2SA4**	444	**F513_239.8 P80 BN80B4**	445
5.9	1122	2.6	235.8	20000	**F603_235.8 S2 M2SA4**	448	**F603_235.8 P80 BN80B4**	449
6.4	1048	1.0	220.1	8500	**F413_220.1 S2 M2SA4**	440	**F413_220.1 P80 BN80B4**	441
6.4	1036	2.8	217.6	20000	**F603_217.6 S2 M2SA4**	448	**F603_217.6 P80 BN80B4**	449
6.5	1032	1.7	216.9	12000	**F513_216.9 S2 M2SA4**	444	**F513_216.9 P80 BN80B4**	445
6.9	963	1.9	202.4	12000	**F513_202.4 S2 M2SA4**	444	**F513_202.4 P80 BN80B4**	445
7.0	958	3.0	201.4	20000	**F603_201.4 S2 M2SA4**	448	**F603_201.4 P80 BN80B4**	449
7.0	947	1.2	198.9	8500	**F413_198.9 S2 M2SA4**	440	**F413_198.9 P80 BN80B4**	441
7.5	885	3.3	185.9	20000	**F603_185.9 S2 M2SA4**	448	**F603_185.9 P80 BN80B4**	449
7.7	860	1.3	180.7	8500	**F413_180.7 S2 M2SA4**	440	**F413_180.7 P80 BN80B4**	441
8.3	803	1.4	168.7	8500	**F413_168.7 S2 M2SA4**	440	**F413_168.7 P80 BN80B4**	441
8.5	788	2.3	165.6	12000	**F513_165.6 S2 M2SA4**	444	**F513_165.6 P80 BN80B4**	445
8.6	775	3.7	162.9	20000	**F603_162.9 S2 M2SA4**	448	**F603_162.9 P80 BN80B4**	449
10.4	640	1.7	134.4	8500	**F413_134.4 S2 M2SA4**	440	**F413_134.4 P80 BN80B4**	441
10.8	618	2.9	129.9	12000	**F513_129.9 S2 M2SA4**	444	**F513_129.9 P80 BN80B4**	445
10.9	611	1.0	128.4	6500	**F313_128.4 S2 M2SA4**	436	**F313_128.4 P80 BN80B4**	437
12.4	536	1.1	112.5	6500	**F313_112.5 S2 M2SA4**	436	**F313_112.5 P80 BN80B4**	437
13.2	505	2.2	106.0	8500	**F413_106.0 S2 M2SA4**	440	**F413_106.0 P80 BN80B4**	441
13.7	485	1.2	101.9	6500	**F313_101.9 S2 M2SA4**	436	**F313_101.9 P80 BN80B4**	437
16.0	416	1.4	87.4	6500	**F313_87.4 S2 M2SA4**	436	**F313_87.4 P80 BN80B4**	437
16.5	404	2.7	84.9	8500	**F413_84.9 S2 M2SA4**	440	**F413_84.9 P80 BN80B4**	441
16.8	397	1.0	83.4	5350	**F253_83.4 S2 M2SA4**	432	**F253_83.4 P80 BN80B4**	433
17.8	375	1.6	78.9	6500	**F313_78.9 S2 M2SA4**	436	**F313_78.9 P80 BN80B4**	437
18.3	365	1.1	76.6	5300	**F253_76.6 S2 M2SA4**	432	**F253_76.6 P80 BN80B4**	433
20.3	329	1.8	69.1	6500	**F313_69.1 S2 M2SA4**	436	**F313_69.1 P80 BN80B4**	437

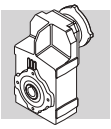

0.75 kW

n_2 min^{-1}	M_2 Nm	S	i	R_{n2} N				
21.1	317	3.5	66.5	8500	**F413_66.5 S2 M2SA4**	440	**F413_66.5 P80 BN80B4**	441
21.4	311	1.3	65.3	5180	**F253_65.3 S2 M2SA4**	432	**F253_65.3 P80 BN80B4**	433
22.3	299	2.0	62.8	6500	**F313_62.8 S2 M2SA4**	436	**F313_62.8 P80 BN80B4**	437
24.0	278	1.4	58.3	5080	**F253_58.3 S2 M2SA4**	432	**F253_58.3 P80 BN80B4**	433
24.7	276	0.9	56.7	3590	**F202_56.7 S2 M2SA4**	428	**F202_56.7 P80 BN80B4**	429
26.9	248	2.4	52.1	6500	**F313_52.1 S2 M2SA4**	436	**F313_52.1 P80 BN80B4**	437
27.6	247	1.0	50.7	3510	**F202_50.7 S2 M2SA4**	428	**F202_50.7 P80 BN80B4**	429
27.6	242	1.7	50.8	4960	**F253_50.8 S2 M2SA4**	432	**F253_50.8 P80 BN80B4**	433
29.4	226	2.6	47.5	6500	**F313_47.5 S2 M2SA4**	436	**F313_47.5 P80 BN80B4**	437
31	218	1.1	44.8	3420	**F202_44.8 S2 M2SA4**	428	**F202_44.8 P80 BN80B4**	429
31	217	1.8	45.6	4860	**F253_45.6 S2 M2SA4**	432	**F253_45.6 P80 BN80B4**	433
31	217	2.8	44.6	6500	**F312_44.6 S2 M2SA4**	436	**F312_44.6 P80 BN80B4**	437
32	216	1.8	44.4	4890	**F252_44.4 S2 M2SA4**	432	**F252_44.4 P80 BN80B4**	433
33	203	1.2	41.8	3370	**F202_41.8 S2 M2SA4**	428	**F202_41.8 P80 BN80B4**	429
34	198	1.9	40.7	4790	**F252_40.7 S2 M2SA4**	432	**F252_40.7 P80 BN80B4**	433
35	196	3.1	40.4	6500	**F312_40.4 S2 M2SA4**	436	**F312_40.4 P80 BN80B4**	437
37	184	1.4	37.9	3300	**F202_37.9 S2 M2SA4**	428	**F202_37.9 P80 BN80B4**	429
37	183	3.3	37.7	6500	**F312_37.7 S2 M2SA4**	436	**F312_37.7 P80 BN80B4**	437
38	177	2.3	36.4	4680	**F252_36.4 S2 M2SA4**	432	**F252_36.4 P80 BN80B4**	433
42	161	1.6	33.1	3200	**F202_33.1 S2 M2SA4**	428	**F202_33.1 P80 BN80B4**	429
44	156	2.6	32.2	4540	**F252_32.2 S2 M2SA4**	432	**F252_32.2 P80 BN80B4**	433
46	148	1.7	30.4	3140	**F202_30.4 S2 M2SA4**	428	**F202_30.4 P80 BN80B4**	429
47	144	1.0	29.6	2550	**F102_29.6 S2 M2SA4**	424	**F102_29.6 P80 BN80B4**	425
47	146	2.7	30.0	4470	**F252_30.0 S2 M2SA4**	432	**F252_30.0 P80 BN80B4**	433
51	132	3	27.2	4360	**F252_27.2 S2 M2SA4**	432	**F252_27.2 P80 BN80B4**	433
54	125	1.1	25.8	2470	**F102_25.8 S2 M2SA4**	424	**F102_25.8 P80 BN80B4**	425
54	126	1.9	25.9	3020	**F202_25.9 S2 M2SA4**	428	**F202_25.9 P80 BN80B4**	429
59	116	3.5	23.8	4210	**F252_23.8 S2 M2SA4**	432	**F252_23.8 P80 BN80B4**	433
60	113	2.1	23.1	2930	**F202_23.1 S2 M2SA4**	428	**F202_23.1 P80 BN80B4**	429
61	111	1.3	22.8	2400	**F102_22.8 S2 M2SA4**	424	**F102_22.8 P80 BN80B4**	425
69	98	2.3	20.2	2830	**F202_20.2 S2 M2SA4**	428	**F202_20.2 P80 BN80B4**	429
72	94	1.4	19.3	2310	**F102_19.3 S2 M2SA4**	424	**F102_19.3 P80 BN80B4**	425
77	88	2.4	18.1	2740	**F202_18.1 S2 M2SA4**	428	**F202_18.1 P80 BN80B4**	429
82	83	1.6	17.0	2230	**F102_17.0 S2 M2SA4**	424	**F102_17.0 P80 BN80B4**	425
95	72	2.8	14.8	2600	**F202_14.8 S2 M2SA4**	428	**F202_14.8 P80 BN80B4**	429
96	71	1.7	14.6	2150	**F102_14.6 S2 M2SA4**	424	**F102_14.6 P80 BN80B4**	425
107	63	1.6	13.0	2070	**F102_13.0 S2 M2SA4**	424	**F102_13.0 P80 BN80B4**	425
121	56	1.7	11.5	2010	**F102_11.5 S2 M2SA4**	424	**F102_11.5 P80 BN80B4**	425
125	55	3.2	11.2	2390	**F202_11.2 S2 M2SA4**	428	**F202_11.2 P80 BN80B4**	429
143	48	1.9	9.8	1920	**F102_9.8 S2 M2SA4**	424	**F102_9.8 P80 BN80B4**	425
163	42	2.0	8.6	1850	**F102_8.6 S2 M2SA4**	424	**F102_8.6 P80 BN80B4**	425
189	36	2.1	7.4	1770	**F102_7.4 S2 M2SA4**	424	**F102_7.4 P80 BN80B4**	425
192	35	2.6	14.6	1770	**F102_14.6 S1 M1LA2**	424	**F102_14.6 P80 BN80A2**	425
216	32	2.7	13.0	1710	**F102_13.0 S1 M1LA2**	424	**F102_13.0 P80 BN80A2**	425
244	28	2.8	11.5	1650	**F102_11.5 S1 M1LA2**	424	**F102_11.5 P80 BN80A2**	425
288	24	3.1	9.8	1570	**F102_9.8 S1 M1LA2**	424	**F102_9.8 P80 BN80A2**	425
327	21	3.2	8.6	1510	**F102_8.6 S1 M1LA2**	424	**F102_8.6 P80 BN80A2**	425
380	18	3.5	7.4	1440	**F102_7.4 S1 M1LA2**	424	**F102_7.4 P80 BN80A2**	425

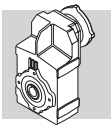

1.1 kW

n_2 min^{-1}	M_2 Nm	S	i	R_{n2} N				
0.59	16336	0.9	1571	55000	**F904_1571 S3 M3SA6**	458	**F904_1571 P90 BN90L6**	459
0.64	14845	0.9	1428	55000	**F904_1428 S3 M3SA6**	458	**F904_1428 P90 BN90L6**	459
0.67	14338	1.0	2099	55000	**F904_2099 S2 M2SB4**	458	**F904_2099 P90 BN90S4**	459
0.72	13235	1.1	1937	55000	**F904_1937 S2 M2SB4**	458	**F904_1937 P90 BN90S4**	459
0.82	11630	1.2	1702	55000	**F904_1702 S2 M2SB4**	458	**F904_1702 P90 BN90S4**	459
0.89	10735	1.3	1571	55000	**F904_1571 S2 M2SB4**	458	**F904_1571 P90 BN90S4**	459
0.98	9755	1.4	1428	55000	**F904_1428 S2 M2SB4**	458	**F904_1428 P90 BN90S4**	459
1.1	8727	0.9	1277	45000	**F804_1277 S2 M2SB4**	455	**F804_1277 P90 BN90S4**	456
1.1	9005	1.6	1318	55000	**F904_1318 S2 M2SB4**	458	**F904_1318 P90 BN90S4**	459
1.2	7831	1.0	1146	45000	**F804_1146 S2 M2SB4**	455	**F804_1146 P90 BN90S4**	456
1.2	8232	1.7	1205	55000	**F904_1205 S2 M2SB4**	458	**F904_1205 P90 BN90S4**	459
1.3	7229	1.1	1058	45000	**F804_1058 S2 M2SB4**	455	**F804_1058 P90 BN90S4**	456
1.3	7599	1.8	1112	55000	**F904_1112 S2 M2SB4**	458	**F904_1112 P90 BN90S4**	459
1.5	6218	2.3	910.2	55000	**F904_910.2 S2 M2SB4**	458	**F904_910.2 P90 BN90S4**	459
1.6	6130	1.3	897.3	45000	**F804_897.3 S2 M2SB4**	455	**F804_897.3 P90 BN90S4**	456
1.7	5617	0.9	822.2	35000	**F704_822.2 S2 M2SB4**	452	**F704_822.2 P90 BN90S4**	453
1.8	5291	1.5	774.4	45000	**F804_774.4 S2 M2SB4**	455	**F804_774.4 P90 BN90S4**	456
1.8	5284	2.6	773.4	55000	**F904_773.4 S2 M2SB4**	458	**F904_773.4 P90 BN90S4**	459
1.9	5085	1.6	489.1	45000	**F804_489.1 S3 M3SA6**	455	**F804_489.1 P90 BN90L6**	456
1.9	5152	2.7	495.6	55000	**F904_495.6 S3 M3SA6**	458	**F904_495.6 P90 BN90L6**	459
2.0	4898	1.0	471.2	35000	**F704_471.2 S3 M3SA6**	452	**F704_471.2 P90 BN90L6**	453
2.0	4694	1.7	451.5	45000	**F804_451.5 S3 M3SA6**	455	**F804_451.5 P90 BN90L6**	456
2.0	4884	1.6	714.9	45000	**F804_714.9 S2 M2SB4**	455	**F804_714.9 P90 BN90S4**	456
2.1	4491	1.1	657.4	35000	**F704_657.4 S2 M2SB4**	452	**F704_657.4 P90 BN90S4**	453
2.2	4274	3.3	625.6	55000	**F904_625.6 S2 M2SB4**	458	**F904_625.6 P90 BN90S4**	459
2.3	4146	1.2	606.8	35000	**F704_606.8 S2 M2SB4**	452	**F704_606.8 P90 BN90S4**	453
2.3	4173	1.9	610.9	45000	**F804_610.9 S2 M2SB4**	455	**F804_610.9 P90 BN90S4**	456
2.4	3945	3.5	577.5	55000	**F904_577.5 S2 M2SB4**	458	**F904_577.5 P90 BN90S4**	459
2.5	3852	2.1	563.9	45000	**F804_563.9 S2 M2SB4**	455	**F804_563.9 P90 BN90S4**	456
2.7	3487	1.4	510.4	35000	**F704_510.4 S2 M2SB4**	452	**F704_510.4 P90 BN90S4**	453
2.9	3347	0.9	489.8	20000	**F604_489.8 S2 M2SB4**	448	**F604_489.8 P90 BN90S4**	449
2.9	3342	2.4	489.1	45000	**F804_489.1 S2 M2SB4**	455	**F804_489.1 P90 BN90S4**	456
3.0	3219	1.6	471.2	35000	**F704_471.2 S2 M2SB4**	452	**F704_471.2 P90 BN90S4**	453
3.1	3085	2.6	451.5	45000	**F804_451.5 S2 M2SB4**	455	**F804_451.5 P90 BN90S4**	456
3.2	2956	1.0	432.6	20000	**F604_432.6 S2 M2SB4**	448	**F604_432.6 P90 BN90S4**	449
3.5	2728	1.1	399.3	20000	**F604_399.3 S2 M2SB4**	448	**F604_399.3 P90 BN90S4**	449
3.5	2757	1.8	403.5	35000	**F704_403.5 S2 M2SB4**	452	**F704_403.5 P90 BN90S4**	453
3.7	2618	3.1	383.2	45000	**F804_383.2 S2 M2SB4**	455	**F804_383.2 P90 BN90S4**	456
3.8	2545	2.0	372.5	35000	**F704_372.5 S2 M2SB4**	452	**F704_372.5 P90 BN90S4**	453
4.0	2416	3.3	353.7	45000	**F804_353.7 S2 M2SB4**	455	**F804_353.7 P90 BN90S4**	456
4.1	2334	1.2	341.7	20000	**F604_341.7 S2 M2SB4**	448	**F604_341.7 P90 BN90S4**	449
4.4	2155	1.3	315.4	20000	**F604_315.4 S2 M2SB4**	448	**F604_315.4 P90 BN90S4**	449
4.6	2079	2.4	304.3	35000	**F704_304.3 S2 M2SB4**	452	**F704_304.3 P90 BN90S4**	453
4.9	1996	0.9	285.9	12000	**F513_285.9 S2 M2SB4**	444	**F513_285.9 P90 BN90S4**	445
5.0	1960	1.5	280.7	20000	**F603_280.7 S2 M2SB4**	448	**F603_280.7 P90 BN90S4**	449
5.0	1919	2.6	280.9	35000	**F704_280.9 S2 M2SB4**	452	**F704_280.9 P90 BN90S4**	453
5.3	1830	1.0	262.1	12000	**F513_262.1 S2 M2SB4**	444	**F513_262.1 P90 BN90S4**	445
5.8	1675	1.1	239.8	12000	**F513_239.8 S2 M2SB4**	444	**F513_239.8 P90 BN90S4**	445
6.0	1603	3.1	234.6	35000	**F704_234.6 S2 M2SB4**	452	**F704_234.6 P90 BN90S4**	453
6.5	1514	1.2	216.9	12000	**F513_216.9 S2 M2SB4**	444	**F513_216.9 P90 BN90S4**	445
6.5	1479	3.4	216.5	35000	**F704_216.5 S2 M2SB4**	452	**F704_216.5 P90 BN90S4**	453

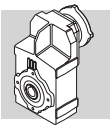

1.1 kW

n_2 min^{-1}	M_2 Nm	S	i	R_{n2} N				
6.9	1413	1.3	202.4	12000	**F513_202.4 S2 M2SB4**	444	**F513_202.4 P90 BN90S4**	445
8.3	1178	0.9	168.7	8500	**F413_168.7 S2 M2SB4**	440	**F413_168.7 P90 BN90S4**	441
8.5	1156	1.6	165.6	12000	**F513_165.6 S2 M2SB4**	444	**F513_165.6 P90 BN90S4**	445
10.4	938	1.2	134.4	8500	**F413_134.4 S2 M2SB4**	440	**F413_134.4 P90 BN90S4**	441
10.8	907	2.0	129.9	12000	**F513_129.9 S2 M2SB4**	444	**F513_129.9 P90 BN90S4**	445
13.2	740	1.5	106.0	8500	**F413_106.0 S2 M2SB4**	440	**F413_106.0 P90 BN90S4**	441
13.3	734	2.5	105.1	12000	**F513_105.1 S2 M2SB4**	444	**F513_105.1 P90 BN90S4**	445
16.0	610	1.0	87.4	6500	**F313_87.4 S2 M2SB4**	436	**F313_87.4 P90 BN90S4**	437
16.5	593	1.9	84.9	8500	**F413_84.9 S2 M2SB4**	440	**F413_84.9 P90 BN90S4**	441
16.8	581	3.1	83.2	12000	**F513_83.2 S2 M2SB4**	444	**F513_83.2 P90 BN90S4**	445
17.8	551	1.1	78.9	6500	**F313_78.9 S2 M2SB4**	436	**F313_78.9 P90 BN90S4**	437
20.3	482	1.2	69.1	6500	**F313_69.1 S2 M2SB4**	436	**F313_69.1 P90 BN90S4**	437
21.1	464	2.4	66.5	8500	**F413_66.5 S2 M2SB4**	440	**F413_66.5 P90 BN90S4**	441
22.3	438	1.4	62.8	6500	**F313_62.8 S2 M2SB4**	436	**F313_62.8 P90 BN90S4**	437
23.2	421	2.6	60.2	8500	**F413_60.2 S2 M2SB4**	440	**F413_60.2 P90 BN90S4**	441
24.0	407	1.0	58.3	4500	**F253_58.3 S2 M2SB4**	432	**F253_58.3 P90 BN90S4**	433
26.9	364	1.6	52.1	6500	**F313_52.1 S2 M2SB4**	436	**F313_52.1 P90 BN90S4**	437
27.2	360	3.0	51.5	8500	**F413_51.5 S2 M2SB4**	440	**F413_51.5 P90 BN90S4**	441
27.6	355	1.1	50.8	4450	**F253_50.8 S2 M2SB4**	432	**F253_50.8 P90 BN90S4**	433
29.2	342	3.1	47.9	8500	**F412_47.9 S2 M2SB4**	440	**F412_47.9 P90 BN90S4**	441
29.4	332	1.7	47.5	6500	**F313_47.5 S2 M2SB4**	436	**F313_47.5 P90 BN90S4**	437
31	318	1.3	45.6	4400	**F253_45.6 S2 M2SB4**	432	**F253_45.6 P90 BN90S4**	433
31	318	1.9	44.6	6500	**F312_44.6 S2 M2SB4**	436	**F312_44.6 P90 BN90S4**	437
32	317	1.2	44.4	4470	**F252_44.4 S2 M2SB4**	432	**F252_44.4 P90 BN90S4**	433
34	290	1.3	40.7	4410	**F252_40.7 S2 M2SB4**	432	**F252_40.7 P90 BN90S4**	433
35	288	2.1	40.4	6500	**F312_40.4 S2 M2SB4**	436	**F312_40.4 P90 BN90S4**	437
37	270	0.9	37.9	3050	**F202_37.9 S2 M2SB4**	428	**F202_37.9 P90 BN90S4**	429
37	269	2.2	37.7	6500	**F312_37.7 S2 M2SB4**	436	**F312_37.7 P90 BN90S4**	437
38	260	1.5	36.4	4330	**F252_36.4 S2 M2SB4**	432	**F252_36.4 P90 BN90S4**	433
41	245	2.4	34.4	6500	**F312_34.4 S2 M2SB4**	436	**F312_34.4 P90 BN90S4**	437
42	236	1.1	33.1	2980	**F202_33.1 S2 M2SB4**	428	**F202_33.1 P90 BN90S4**	429
44	230	1.7	32.2	4240	**F252_32.2 S2 M2SB4**	432	**F252_32.2 P90 BN90S4**	433
46	217	1.2	30.4	2930	**F202_30.4 S2 M2SB4**	428	**F202_30.4 P90 BN90S4**	429
46	215	2.8	30.1	6500	**F312_30.1 S2 M2SB4**	436	**F312_30.1 P90 BN90S4**	437
47	214	1.9	30.0	4190	**F252_30.0 S2 M2SB4**	432	**F252_30.0 P90 BN90S4**	433
51	194	2.1	27.2	4100	**F252_27.2 S2 M2SB4**	432	**F252_27.2 P90 BN90S4**	433
51	195	3.1	27.3	6500	**F312_27.3 S2 M2SB4**	436	**F312_27.3 P90 BN90S4**	437
54	185	1.3	25.9	2840	**F202_25.9 S2 M2SB4**	428	**F202_25.9 P90 BN90S4**	429
59	169	2.4	23.8	3990	**F252_23.8 S2 M2SB4**	432	**F252_23.8 P90 BN90S4**	433
60	165	1.4	23.1	2780	**F202_23.1 S2 M2SB4**	428	**F202_23.1 P90 BN90S4**	429
64	156	2.6	21.8	3920	**F252_21.8 S2 M2SB4**	432	**F252_21.8 P90 BN90S4**	433
69	144	1.6	20.2	2690	**F202_20.2 S2 M2SB4**	428	**F202_20.2 P90 BN90S4**	429
72	138	1.0	19.3	2170	**F102_19.3 S2 M2SB4**	424	**F102_19.3 P90 BN90S4**	425
75	133	3.0	18.6	3780	**F252_18.6 S2 M2SB4**	432	**F252_18.6 P90 BN90S4**	433
77	129	1.7	18.1	2620	**F202_18.1 S2 M2SB4**	428	**F202_18.1 P90 BN90S4**	429
82	121	1.1	17.0	2110	**F102_17.0 S2 M2SB4**	424	**F102_17.0 P90 BN90S4**	425
84	119	3.4	16.6	3670	**F252_16.6 S2 M2SB4**	432	**F252_16.6 P90 BN90S4**	433
95	106	1.9	14.8	2500	**F202_14.8 S2 M2SB4**	428	**F202_14.8 P90 BN90S4**	429
96	104	1.1	14.6	2050	**F102_14.6 S2 M2SB4**	424	**F102_14.6 P90 BN90S4**	425
107	93	1.1	13.0	1980	**F102_13.0 S2 M2SB4**	424	**F102_13.0 P90 BN90S4**	425
121	82	1.2	11.5	1920	**F102_11.5 S2 M2SB4**	424	**F102_11.5 P90 BN90S4**	425

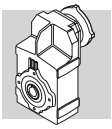

1.1 kW

n_2 min-1	M_2 Nm	S	i	R_{n2} N				
125	80	2.2	11.2	2310	**F202_11.2 S2 M2SB4**	428	**F202_11.2 P90 BN90S4**	429
143	70	1.3	9.8	1840	**F102_9.8 S2 M2SB4**	424	**F102_9.8 P90 BN90S4**	425
160	62	2.5	8.7	2160	**F202_8.7 S2 M2SB4**	428	**F202_8.7 P90 BN90S4**	429
163	61	1.3	8.6	1780	**F102_8.6 S2 M2SB4**	424	**F102_8.6 P90 BN90S4**	425
179	56	2.6	7.8	2100	**F202_7.8 S2 M2SB4**	428	**F202_7.8 P90 BN90S4**	429
189	53	1.4	7.4	1720	**F102_7.4 S2 M2SB4**	424	**F102_7.4 P90 BN90S4**	425
218	46	2.8	6.4	1980	**F202_6.4 S2 M2SB4**	428	**F202_6.4 P90 BN90S4**	429
243	41	1.9	11.5	1600	**F102_11.5 S2 M2SA2**	424	**F102_11.5 P80 BN80B2**	425
249	40	3.5	11.2	1910	**F202_11.2 S2 M2SA2**	428	**F202_11.2 P80 BN80B2**	429
287	35	2.1	9.8	1530	**F102_9.8 S2 M2SA2**	424	**F102_9.8 P80 BN80B2**	425
326	31	2.2	8.6	1480	**F102_8.6 S2 M2SA2**	424	**F102_8.6 P80 BN80B2**	425
378	26	2.4	7.4	1410	**F102_7.4 S2 M2SA2**	424	**F102_7.4 P80 BN80B2**	425

1.5 kW

n_2 min-1	M_2 Nm	S	i	R_{n2} N				
0.83	15747	0.9	1702	55000	**F904_1702 S3 M3SA4**	458	**F904_1702 P90 BN90LA4**	459
0.90	14535	1.0	1571	55000	**F904_1571 S3 M3SA4**	458	**F904_1571 P90 BN90LA4**	459
0.99	13208	1.1	1428	55000	**F904_1428 S3 M3SA4**	458	**F904_1428 P90 BN90LA4**	459
1.1	12192	1.1	1318	55000	**F904_1318 S3 M3SA4**	458	**F904_1318 P90 BN90LA4**	459
1.2	11146	1.3	1205	55000	**F904_1205 S3 M3SA4**	458	**F904_1205 P90 BN90LA4**	459
1.3	10288	1.4	1112	55000	**F904_1112 S3 M3SA4**	458	**F904_1112 P90 BN90LA4**	459
1.5	8419	1.7	910.2	55000	**F904_910.2 S3 M3SA4**	458	**F904_910.2 P90 BN90LA4**	459
1.6	8300	1.0	897.3	45000	**F804_897.3 S3 M3SA4**	455	**F804_897.3 P90 BN90LA4**	456
1.8	7164	1.1	774.4	45000	**F804_774.4 S3 M3SA4**	455	**F804_774.4 P90 BN90LA4**	456
1.8	7154	2.0	773.4	55000	**F904_773.4 S3 M3SA4**	458	**F904_773.4 P90 BN90LA4**	459
2.0	6612	1.2	714.9	45000	**F804_714.9 S3 M3SA4**	455	**F804_714.9 P90 BN90LA4**	456
2.3	5613	0.9	606.8	35000	**F704_606.8 S3 M3SA4**	452	**F704_606.8 P90 BN90LA4**	453
2.3	5651	1.4	610.9	45000	**F804_610.9 S3 M3SA4**	455	**F804_610.9 P90 BN90LA4**	456
2.3	5787	2.4	625.6	55000	**F904_625.6 S3 M3SA4**	458	**F904_625.6 P90 BN90LA4**	459
2.4	5342	2.6	577.5	55000	**F904_577.5 S3 M3SA4**	458	**F904_577.5 P90 BN90LA4**	459
2.5	5216	1.5	563.9	45000	**F804_563.9 S3 M3SA4**	455	**F804_563.9 P90 BN90LA4**	456
2.8	4721	1.1	510.4	35000	**F704_510.4 S3 M3SA4**	452	**F704_510.4 P90 BN90LA4**	453
2.8	4584	3.1	495.6	55000	**F904_495.6 S3 M3SA4**	458	**F904_495.6 P90 BN90LA4**	459
2.9	4524	1.8	489.1	45000	**F804_489.1 S3 M3SA4**	455	**F804_489.1 P90 BN90LA4**	456
3.0	4358	1.1	471.2	35000	**F704_471.2 S3 M3SA4**	452	**F704_471.2 P90 BN90LA4**	453
3.1	4176	1.9	451.5	45000	**F804_451.5 S3 M3SA4**	455	**F804_451.5 P90 BN90LA4**	456
3.1	4231	3.3	457.5	55000	**F904_457.5 S3 M3SA4**	458	**F904_457.5 P90 BN90LA4**	459
3.5	3732	1.3	403.5	35000	**F704_403.5 S3 M3SA4**	452	**F704_403.5 P90 BN90LA4**	453
3.7	3544	2.3	383.2	45000	**F804_383.2 S3 M3SA4**	455	**F804_383.2 P90 BN90LA4**	456
3.8	3445	1.5	372.5	35000	**F704_372.5 S3 M3SA4**	452	**F704_372.5 P90 BN90LA4**	453
4.0	3272	2.4	353.7	45000	**F804_353.7 S3 M3SA4**	455	**F804_353.7 P90 BN90LA4**	456
4.1	3160	0.9	341.7	20000	**F604_341.7 S3 M3SA4**	448	**F604_341.7 P90 BN90LA4**	449
4.5	2917	1.0	315.4	20000	**F604_315.4 S3 M3SA4**	448	**F604_315.4 P90 BN90LA4**	449
4.6	2815	1.8	304.3	35000	**F704_304.3 S3 M3SA4**	452	**F704_304.3 P90 BN90LA4**	453
4.8	2745	2.9	296.7	45000	**F804_296.7 S3 M3SA4**	455	**F804_296.7 P90 BN90LA4**	456
5.0	2653	1.1	280.7	20000	**F603_280.7 S3 M3SA4**	448	**F603_280.7 P90 BN90LA4**	449
5.0	2599	1.9	280.9	35000	**F704_280.9 S3 M3SA4**	452	**F704_280.9 P90 BN90LA4**	453

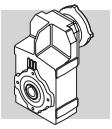

1.5 kW

n_2 min^{-1}	M_2 Nm	S	i	R_{n2} N				
5.1	2534	3.2	273.9	45000	**F804_273.9 S3 M3SA4**	455	**F804_273.9 P90 BN90LA4**	456
5.4	2449	1.2	259.1	20000	**F603_259.1 S3 M3SA4**	448	**F603_259.1 P90 BN90LA4**	449
6.0	2229	1.3	235.8	20000	**F603_235.8 S3 M3SA4**	448	**F603_235.8 P90 BN90LA4**	449
6.0	2170	2.3	234.6	35000	**F704_234.6 S3 M3SA4**	452	**F704_234.6 P90 BN90LA4**	453
6.5	2057	1.4	217.6	20000	**F603_217.6 S3 M3SA4**	448	**F603_217.6 P90 BN90LA4**	449
6.5	2003	2.5	216.5	35000	**F704_216.5 S3 M3SA4**	452	**F704_216.5 P90 BN90LA4**	453
7.0	1913	0.9	202.4	12000	**F513_202.4 S3 M3SA4**	444	**F513_202.4 P90 BN90LA4**	445
7.0	1904	1.5	201.4	20000	**F603_201.4 S3 M3SA4**	448	**F603_201.4 P90 BN90LA4**	449
7.2	1853	2.7	196.0	35000	**F703_196.0 S3 M3SA4**	452	**F703_196.0 P90 BN90LA4**	453
7.6	1757	1.7	185.9	20000	**F603_185.9 S3 M3SA4**	448	**F603_185.9 P90 BN90LA4**	449
7.8	1711	2.9	180.9	35000	**F703_180.9 S3 M3SA4**	452	**F703_180.9 P90 BN90LA4**	453
8.5	1566	1.1	165.6	12000	**F513_165.6 S3 M3SA4**	444	**F513_165.6 P90 BN90LA4**	445
8.5	1576	3.2	166.7	35000	**F703_166.7 S3 M3SA4**	452	**F703_166.7 P90 BN90LA4**	453
8.7	1540	1.9	162.9	20000	**F603_162.9 S3 M3SA4**	448	**F603_162.9 P90 BN90LA4**	449
9.2	1454	3.4	153.8	35000	**F703_153.8 S3 M3SA4**	452	**F703_153.8 P90 BN90LA4**	453
9.4	1421	2.0	150.4	20000	**F603_150.4 S3 M3SA4**	448	**F603_150.4 P90 BN90LA4**	449
10.8	1234	2.4	130.5	20000	**F603_130.5 S3 M3SA4**	448	**F603_130.5 P90 BN90LA4**	449
10.9	1228	1.5	129.9	12000	**F513_129.9 S3 M3SA4**	444	**F513_129.9 P90 BN90LA4**	445
11.7	1139	2.5	120.5	20000	**F603_120.5 S3 M3SA4**	448	**F603_120.5 P90 BN90LA4**	449
13.3	1002	1.1	106.0	8500	**F413_106.0 S3 M3SA4**	440	**F413_106.0 P90 BN90LA4**	441
13.3	1006	2.9	106.4	20000	**F603_106.4 S3 M3SA4**	448	**F603_106.4 P90 BN90LA4**	449
13.4	993	1.8	105.1	12000	**F513_105.1 S3 M3SA4**	444	**F513_105.1 P90 BN90LA4**	445
14.4	928	3.1	98.2	20000	**F603_98.2 S3 M3SA4**	448	**F603_98.2 P90 BN90LA4**	449
16.6	802	1.4	84.9	8500	**F413_84.9 S3 M3SA4**	440	**F413_84.9 P90 BN90LA4**	441
16.9	787	2.3	83.2	12000	**F513_83.2 S3 M3SA4**	444	**F513_83.2 P90 BN90LA4**	445
20.4	653	0.9	69.1	6500	**F313_69.1 S3 M3SA4**	436	**F313_69.1 P90 BN90LA4**	437
21.2	629	1.7	66.5	8500	**F413_66.5 S3 M3SA4**	440	**F413_66.5 P90 BN90LA4**	441
21.4	622	2.9	65.8	12000	**F513_65.8 S3 M3SA4**	444	**F513_65.8 P90 BN90LA4**	445
22.5	593	1.0	62.8	6500	**F313_62.8 S3 M3SA4**	436	**F313_62.8 P90 BN90LA4**	437
23.4	570	1.9	60.2	8500	**F413_60.2 S3 M3SA4**	440	**F413_60.2 P90 BN90LA4**	441
27.1	492	1.2	52.1	6500	**F313_52.1 S3 M3SA4**	436	**F313_52.1 P90 BN90LA4**	437
27.4	487	2.2	51.5	8500	**F413_51.5 S3 M3SA4**	440	**F413_51.5 P90 BN90LA4**	441
29.4	463	2.3	47.9	8500	**F412_47.9 S3 M3SA4**	440	**F412_47.9 P90 BN90LA4**	441
29.7	449	1.3	47.5	6500	**F313_47.5 S3 M3SA4**	436	**F313_47.5 P90 BN90LA4**	437
31	431	0.9	45.6	3880	**F253_45.6 S3 M3SA4**	432	**F253_45.6 P90 BN90LA4**	433
32	431	1.4	44.6	6500	**F312_44.6 S3 M3SA4**	436	**F312_44.6 P90 BN90LA4**	437
35	393	1.0	40.7	3970	**F252_40.7 S3 M3SA4**	432	**F252_40.7 P90 BN90LA4**	433
35	390	1.5	40.4	6500	**F312_40.4 S3 M3SA4**	436	**F312_40.4 P90 BN90LA4**	437
37	364	1.6	37.7	6500	**F312_37.7 S3 M3SA4**	436	**F312_37.7 P90 BN90LA4**	437
37	369	3.0	38.2	8500	**F412_38.2 S3 M3SA4**	440	**F412_38.2 P90 BN90LA4**	441
39	352	1.1	36.4	3940	**F252_36.4 S3 M3SA4**	432	**F252_36.4 P90 BN90LA4**	433
41	332	1.8	34.4	6500	**F312_34.4 S3 M3SA4**	436	**F312_34.4 P90 BN90LA4**	437
44	311	1.3	32.2	3890	**F252_32.2 S3 M3SA4**	432	**F252_32.2 P90 BN90LA4**	433
47	290	1.4	30.0	3860	**F252_30.0 S3 M3SA4**	432	**F252_30.0 P90 BN90LA4**	433
47	291	2.1	30.1	6500	**F312_30.1 S3 M3SA4**	436	**F312_30.1 P90 BN90LA4**	437
52	263	1.5	27.2	3810	**F252_27.2 S3 M3SA4**	432	**F252_27.2 P90 BN90LA4**	433
52	263	2.3	27.3	6500	**F312_27.3 S3 M3SA4**	436	**F312_27.3 P90 BN90LA4**	437
54	250	1.0	25.9	2640	**F202_25.9 S3 M3SA4**	428	**F202_25.9 P90 BN90LA4**	429
59	229	1.7	23.8	3730	**F252_23.8 S3 M3SA4**	432	**F252_23.8 P90 BN90LA4**	433
60	226	2.7	23.4	6480	**F312_23.4 S3 M3SA4**	436	**F312_23.4 P90 BN90LA4**	437
61	224	1.1	23.1	2600	**F202_23.1 S3 M3SA4**	428	**F202_23.1 P90 BN90LA4**	429

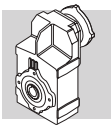

1.5 kW

n_2 min^{-1}	M_2 Nm	S	i	R_{n2} N				
65	211	1.9	21.8	3680	**F252_21.8 S3 M3SA4**	432	**F252_21.8 P90 BN90LA4**	433
67	204	2.9	21.1	6320	**F312_21.1 S3 M3SA4**	436	**F312_21.1 P90 BN90LA4**	437
70	195	1.1	20.2	2530	**F202_20.2 S3 M3SA4**	428	**F202_20.2 P90 BN90LA4**	429
76	180	2.2	18.6	3570	**F252_18.6 S3 M3SA4**	432	**F252_18.6 P90 BN90LA4**	433
76	179	3.4	18.5	6110	**F312_18.5 S3 M3SA4**	436	**F312_18.5 P90 BN90LA4**	437
78	175	1.2	18.1	2480	**F202_18.1 S3 M3SA4**	428	**F202_18.1 P90 BN90LA4**	429
85	161	2.5	16.6	3490	**F252_16.6 S3 M3SA4**	432	**F252_16.6 P90 BN90LA4**	433
95	143	1.4	14.8	2380	**F202_14.8 S3 M3SA4**	428	**F202_14.8 P90 BN90LA4**	429
97	140	2.9	14.5	3390	**F252_14.5 S3 M3SA4**	432	**F252_14.5 P90 BN90LA4**	433
109	125	3.2	13	3310	**F252_13.0 S3 M3SA4**	432	**F252_13.0 P90 BN90LA4**	433
126	108	1.6	11.2	2220	**F202_11.2 S3 M3SA4**	428	**F202_11.2 P90 BN90LA4**	429
144	94	0.9	9.8	1760	**F102_9.8 S3 M3SA4**	424	**F102_9.8 P90 BN90LA4**	425
151	90	2.9	9.4	3070	**F252_9.4 S3 M3SA4**	432	**F252_9.4 P90 BN90LA4**	433
161	84	1.8	8.7	2090	**F202_8.7 S3 M3SA4**	428	**F202_8.7 P90 BN90LA4**	429
164	83	1.0	8.6	1710	**F102_8.6 S3 M3SA4**	424	**F102_8.6 P90 BN90LA4**	425
168	81	3.2	8.4	2980	**F252_8.4 S3 M3SA4**	432	**F252_8.4 P90 BN90LA4**	433
180	76	1.9	7.8	2030	**F202_7.8 S3 M3SA4**	428	**F202_7.8 P90 BN90LA4**	429
190	72	1.1	7.4	1650	**F102_7.4 S3 M3SA4**	424	**F102_7.4 P90 BN90LA4**	425
220	62	2.1	6.4	1930	**F202_6.4 S3 M3SA4**	428	**F202_6.4 P90 BN90LA4**	429
243	56	1.4	11.5	1560	**F102_11.5 S2 M2SB2**	424	**F102_11.5 P90 BN90SA2**	425
249	55	2.6	11.2	1860	**F202_11.2 S2 M2SB2**	428	**F202_11.2 P90 BN90SA2**	429
287	48	1.5	9.8	1490	**F102_9.8 S2 M2SB2**	424	**F102_9.8 P90 BN90SA2**	425
321	42	2.9	8.7	1740	**F202_8.7 S2 M2SB2**	428	**F202_8.7 P90 BN90SA2**	429
326	42	1.6	8.6	1440	**F102_8.6 S2 M2SB2**	424	**F102_8.6 P90 BN90SA2**	425
357	38	3.0	7.8	1680	**F202_7.8 S2 M2SB2**	428	**F202_7.8 P90 BN90SA2**	429
378	36	1.7	7.4	1380	**F102_7.4 S2 M2SB2**	424	**F102_7.4 P90 BN90SA2**	425
437	31	3.3	6.4	1590	**F202_6.4 S2 M2SB2**	428	**F202_6.4 P90 BN90SA2**	429

2.2 kW

n_2 min^{-1}	M_2 Nm	S	i	R_{n2} N				
1.2	16347	0.9	1205	55000	**F904_1205 S3 M3LA4**	458	**F904_1205 P100 BN100LA4**	459
1.3	15090	0.9	1112	55000	**F904_1112 S3 M3LA4**	458	**F904_1112 P100 BN100LA4**	459
1.5	12348	1.1	910.2	55000	**F904_910.2 S3 M3LA4**	458	**F904_910.2 P100 BN100LA4**	459
1.8	10493	1.3	773.4	55000	**F904_773.4 S3 M3LA4**	458	**F904_773.4 P100 BN100LA4**	459
2.3	8287	1.0	610.9	45000	**F804_610.9 S3 M3LA4**	455	**F804_610.9 P100 BN100LA4**	456
2.3	8488	1.6	625.6	55000	**F904_625.6 S3 M3LA4**	458	**F904_625.6 P100 BN100LA4**	459
2.4	7835	1.8	577.5	55000	**F904_577.5 S3 M3LA4**	458	**F904_577.5 P100 BN100LA4**	459
2.5	7650	1.0	563.9	45000	**F804_563.9 S3 M3LA4**	455	**F804_563.9 P100 BN100LA4**	456
2.8	6723	2.1	495.6	55000	**F904_495.6 S3 M3LA4**	458	**F904_495.6 P100 BN100LA4**	459
2.9	6636	1.2	489.1	45000	**F804_489.1 S3 M3LA4**	455	**F804_489.1 P100 BN100LA4**	456
3.1	6125	1.3	451.5	45000	**F804_451.5 S3 M3LA4**	455	**F804_451.5 P100 BN100LA4**	456
3.1	6206	2.3	457.5	55000	**F904_457.5 S3 M3LA4**	458	**F904_457.5 P100 BN100LA4**	459
3.5	5474	0.9	403.5	35000	**F704_403.5 S3 M3LA4**	452	**F704_403.5 P100 BN100LA4**	453
3.7	5198	1.5	383.2	45000	**F804_383.2 S3 M3LA4**	455	**F804_383.2 P100 BN100LA4**	456
3.8	5053	1.0	372.5	35000	**F704_372.5 S3 M3LA4**	452	**F704_372.5 P100 BN100LA4**	453
3.9	4909	2.9	361.8	55000	**F904_361.8 S3 M3LA4**	458	**F904_361.8 P100 BN100LA4**	459
4.0	4798	1.7	353.7	45000	**F804_353.7 S3 M3LA4**	455	**F804_353.7 P100 BN100LA4**	456

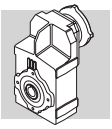

2.2 kW

n_2 min^{-1}	M_2 Nm	S	i	R_{n2} N				
4.6	4129	1.2	304.3	35000	**F704_304.3 S3 M3LA4**	452	**F704_304.3 P100 BN100LA4**	453
4.8	4025	2.0	296.7	45000	**F804_296.7 S3 M3LA4**	455	**F804_296.7 P100 BN100LA4**	456
4.8	3950	3.5	291.1	55000	**F904_291.1 S3 M3LA4**	458	**F904_291.1 P100 BN100LA4**	459
5.0	3811	1.3	280.9	35000	**F704_280.9 S3 M3LA4**	452	**F704_280.9 P100 BN100LA4**	453
5.1	3716	2.2	273.9	45000	**F804_273.9 S3 M3LA4**	455	**F804_273.9 P100 BN100LA4**	456
6.0	3182	1.6	234.6	35000	**F704_234.6 S3 M3LA4**	452	**F704_234.6 P100 BN100LA4**	453
6.5	3018	1.0	217.6	20000	**F603_217.6 S3 M3LA4**	448	**F603_217.6 P100 BN100LA4**	449
6.5	2938	1.7	216.5	35000	**F704_216.5 S3 M3LA4**	452	**F704_216.5 P100 BN100LA4**	453
6.5	2964	2.7	218.5	45000	**F804_218.5 S3 M3LA4**	455	**F804_218.5 P100 BN100LA4**	456
7.0	2792	1.0	201.4	20000	**F603_201.4 S3 M3LA4**	448	**F603_201.4 P100 BN100LA4**	449
7.2	2718	1.8	196.0	35000	**F703_196.0 S3 M3LA4**	452	**F703_196.0 P100 BN100LA4**	453
7.6	2577	1.1	185.9	20000	**F603_185.9 S3 M3LA4**	448	**F603_185.9 P100 BN100LA4**	449
7.6	2560	3.1	184.6	45000	**F803_184.6 S3 M3LA4**	455	**F803_184.6 P100 BN100LA4**	456
7.8	2509	2.0	180.9	35000	**F703_180.9 S3 M3LA4**	452	**F703_180.9 P100 BN100LA4**	453
8.5	2311	2.2	166.7	35000	**F703_166.7 S3 M3LA4**	452	**F703_166.7 P100 BN100LA4**	453
8.7	2258	1.3	162.9	20000	**F603_162.9 S3 M3LA4**	448	**F603_162.9 P100 BN100LA4**	449
9.2	2133	2.3	153.8	35000	**F703_153.8 S3 M3LA4**	452	**F703_153.8 P100 BN100LA4**	453
9.4	2085	1.4	150.4	20000	**F603_150.4 S3 M3LA4**	448	**F603_150.4 P100 BN100LA4**	449
10.6	1843	2.7	133.0	35000	**F703_133.0 S3 M3LA4**	452	**F703_133.0 P100 BN100LA4**	453
10.8	1809	1.6	130.5	20000	**F603_130.5 S3 M3LA4**	448	**F603_130.5 P100 BN100LA4**	449
10.9	1801	1.0	129.9	12000	**F513_129.9 S3 M3LA4**	444	**F513_129.9 P100 BN100LA4**	445
11.5	1702	2.9	122.7	35000	**F703_122.7 S3 M3LA4**	452	**F703_122.7 P100 BN100LA4**	453
11.7	1670	1.7	120.5	20000	**F603_120.5 S3 M3LA4**	448	**F603_120.5 P100 BN100LA4**	449
12.9	1520	3.3	109.6	35000	**F703_109.6 S3 M3LA4**	452	**F703_109.6 P100 BN100LA4**	453
13.3	1475	2.0	106.4	20000	**F603_106.4 S3 M3LA4**	448	**F603_106.4 P100 BN100LA4**	449
13.4	1457	1.2	105.1	12000	**F513_105.1 S3 M3LA4**	444	**F513_105.1 P100 BN100LA4**	445
14.4	1362	2.1	98.2	20000	**F603_98.2 S3 M3LA4**	448	**F603_98.2 P100 BN100LA4**	449
16.6	1177	0.9	84.9	8500	**F413_84.9 S3 M3LA4**	440	**F413_84.9 P100 BN100LA4**	441
16.8	1165	2.5	84.0	20000	**F603_84.0 S3 M3LA4**	448	**F603_84.0 P100 BN100LA4**	449
16.9	1154	1.6	83.2	12000	**F513_83.2 S3 M3LA4**	444	**F513_83.2 P100 BN100LA4**	445
18.2	1075	2.7	77.6	20000	**F603_77.6 S3 M3LA4**	448	**F603_77.6 P100 BN100LA4**	449
20.7	947	3.1	68.3	20000	**F603_68.3 S3 M3LA4**	448	**F603_68.3 P100 BN100LA4**	449
21.2	922	1.2	66.5	8500	**F413_66.5 S3 M3LA4**	440	**F413_66.5 P100 BN100LA4**	441
21.4	913	2.0	65.8	12000	**F513_65.8 S3 M3LA4**	444	**F513_65.8 P100 BN100LA4**	445
22.4	874	3.3	63.0	20000	**F603_63.0 S3 M3LA4**	448	**F603_63.0 P100 BN100LA4**	449
23.4	835	1.3	60.2	8500	**F413_60.2 S3 M3LA4**	440	**F413_60.2 P100 BN100LA4**	441
27.4	714	1.5	51.5	8500	**F413_51.5 S3 M3LA4**	440	**F413_51.5 P100 BN100LA4**	441
28.8	678	2.7	48.9	12000	**F513_48.9 S3 M3LA4**	444	**F513_48.9 P100 BN100LA4**	445
29.4	679	1.6	47.9	8500	**F412_47.9 S3 M3LA4**	440	**F412_47.9 P100 BN100LA4**	441
32	632	0.9	44.6	6500	**F312_44.6 S3 M3LA4**	436	**F312_44.6 P100 BN100LA4**	437
35	572	1.0	40.4	6500	**F312_40.4 S3 M3LA4**	436	**F312_40.4 P100 BN100LA4**	437
37	534	1.1	37.7	6500	**F312_37.7 S3 M3LA4**	436	**F312_37.7 P100 BN100LA4**	437
37	541	2.0	38.2	8500	**F412_38.2 S3 M3LA4**	440	**F412_38.2 P100 BN100LA4**	441
38	526	3.2	37.1	12000	**F512_37.1 S3 M3LA4**	444	**F512_37.1 P100 BN100LA4**	445
41	487	1.2	34.4	6490	**F312_34.4 S3 M3LA4**	436	**F312_34.4 P100 BN100LA4**	437
47	425	0.9	30.0	3300	**F252_30.0 S3 M3LA4**	432	**F252_30.0 P100 BN100LA4**	433
47	427	1.4	30.1	6360	**F312_30.1 S3 M3LA4**	436	**F312_30.1 P100 BN100LA4**	437
47	427	2.6	30.1	8500	**F412_30.1 S3 M3LA4**	440	**F412_30.1 P100 BN100LA4**	441
52	385	1.0	27.2	3300	**F252_27.2 S3 M3LA4**	432	**F252_27.2 P100 BN100LA4**	433
52	386	1.6	27.3	6250	**F312_27.3 S3 M3LA4**	436	**F312_27.3 P100 BN100LA4**	437
58	342	3.2	24.1	8400	**F412_24.1 S3 M3LA4**	440	**F412_24.1 P100 BN100LA4**	441

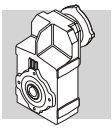

2.2 kW

n_2 min^{-1}	M_2 Nm	S	i	R_{n2} N				
59	336	1.2	23.8	3290	**F252_23.8 S3 M3LA4**	432	**F252_23.8 P100 BN100LA4**	433
60	331	1.8	23.4	6080	**F312_23.4 S3 M3LA4**	436	**F312_23.4 P100 BN100LA4**	437
65	309	1.3	21.8	3270	**F252_21.8 S3 M3LA4**	432	**F252_21.8 P100 BN100LA4**	433
67	299	2.0	21.1	5960	**F312_21.1 S3 M3LA4**	436	**F312_21.1 P100 BN100LA4**	437
76	264	1.5	18.6	3220	**F252_18.6 S3 M3LA4**	432	**F252_18.6 P100 BN100LA4**	433
76	262	2.3	18.5	5790	**F312_18.5 S3 M3LA4**	436	**F312_18.5 P100 BN100LA4**	437
84	238	2.5	16.8	5670	**F312_16.8 S3 M3LA4**	436	**F312_16.8 P100 BN100LA4**	437
85	235	1.7	16.6	3180	**F252_16.6 S3 M3LA4**	432	**F252_16.6 P100 BN100LA4**	433
95	210	1.0	14.8	2190	**F202_14.8 S3 M3LA4**	428	**F202_14.8 P100 BN100LA4**	429
97	205	2.0	14.5	3120	**F252_14.5 S3 M3LA4**	432	**F252_14.5 P100 BN100LA4**	433
101	198	3.0	13.9	5430	**F312_13.9 S3 M3LA4**	436	**F312_13.9 P100 BN100LA4**	437
109	184	2.2	13.0	3070	**F252_13.0 S3 M3LA4**	432	**F252_13.0 P100 BN100LA4**	433
111	180	3.3	12.7	5310	**F312_12.7 S3 M3LA4**	436	**F312_12.7 P100 BN100LA4**	437
126	159	1.1	11.2	2060	**F202_11.2 S3 M3LA4**	428	**F202_11.2 P100 BN100LA4**	429
133	150	2.6	10.6	2960	**F252_10.6 S3 M3LA4**	432	**F252_10.6 P100 BN100LA4**	433
151	133	2.0	9.4	2900	**F252_9.4 S3 M3LA4**	432	**F252_9.4 P100 BN100LA4**	433
156	128	3.1	9.0	4830	**F312_9.0 S3 M3LA4**	436	**F312_9.0 P100 BN100LA4**	437
161	124	1.3	8.7	1960	**F202_8.7 S3 M3LA4**	428	**F202_8.7 P100 BN100LA4**	429
168	119	2.2	8.4	2830	**F252_8.4 S3 M3LA4**	432	**F252_8.4 P100 BN100LA4**	433
171	117	3.3	8.2	4720	**F312_8.2 S3 M3LA4**	436	**F312_8.2 P100 BN100LA4**	437
180	111	1.3	7.8	1920	**F202_7.8 S3 M3LA4**	428	**F202_7.8 P100 BN100LA4**	429
205	97	2.6	6.9	2710	**F252_6.9 S3 M3LA4**	432	**F252_6.9 P100 BN100LA4**	433
220	91	1.4	6.4	1840	**F202_6.4 S3 M3LA4**	428	**F202_6.4 P100 BN100LA4**	429
247	81	1.0	11.5	1470	**F102_11.5 S3 M3SA2**	424	**F102_11.5 P90 BN90L2**	425
254	79	1.8	11.2	1780	**F202_11.2 S3 M3SA2**	428	**F202_11.2 P90 BN90L2**	429
292	68	1.1	9.8	1410	**F102_9.8 S3 M3SA2**	424	**F102_9.8 P90 BN90L2**	425
326	61	2.0	8.7	1670	**F202_8.7 S3 M3SA2**	428	**F202_8.7 P90 BN90L2**	429
332	60	1.1	8.6	1370	**F102_8.6 S3 M3SA2**	424	**F102_8.6 P90 BN90L2**	425
364	55	2.1	7.8	1630	**F202_7.8 S3 M3SA2**	428	**F202_7.8 P90 BN90L2**	429
385	52	1.2	7.4	1330	**F102_7.4 S3 M3SA2**	424	**F102_7.4 P90 BN90L2**	425
444	45	2.3	6.4	1540	**F202_6.4 S3 M3SA2**	428	**F202_6.4 P90 BN90L2**	429

3.0 kW

n_2 min^{-1}	M_2 Nm	S	i	R_{n2} N				
1.8	14309	1.0	773.4	55000	**F904_773.4 S3 M3LB4**	458	**F904_773.4 P100 BN100LB4**	459
2.3	11574	1.2	625.6	55000	**F904_625.6 S3 M3LB4**	458	**F904_625.6 P100 BN100LB4**	459
2.4	10684	1.3	577.5	55000	**F904_577.5 S3 M3LB4**	458	**F904_577.5 P100 BN100LB4**	459
2.8	9168	1.5	495.6	55000	**F904_495.6 S3 M3LB4**	458	**F904_495.6 P100 BN100LB4**	459
2.9	9049	0.9	489.1	45000	**F804_489.1 S3 M3LB4**	455	**F804_489.1 P100 BN100LB4**	456
3.1	8353	1.0	451.5	45000	**F804_451.5 S3 M3LB4**	455	**F804_451.5 P100 BN100LB4**	456
3.1	8463	1.7	457.5	55000	**F904_457.5 S3 M3LB4**	458	**F904_457.5 P100 BN100LB4**	459
3.7	7088	1.1	383.2	45000	**F804_383.2 S3 M3LB4**	455	**F804_383.2 P100 BN100LB4**	456
3.9	6694	2.1	361.8	55000	**F904_361.8 S3 M3LB4**	458	**F904_361.8 P100 BN100LB4**	459
4.0	6543	1.2	353.7	45000	**F804_353.7 S3 M3LB4**	455	**F804_353.7 P100 BN100LB4**	456
4.6	5630	0.9	304.3	35000	**F704_304.3 S3 M3LB4**	452	**F704_304.3 P100 BN100LB4**	453
4.8	5489	1.5	296.7	45000	**F804_296.7 S3 M3LB4**	455	**F804_296.7 P100 BN100LB4**	456
4.8	5386	2.6	291.1	55000	**F904_291.1 S3 M3LB4**	458	**F904_291.1 P100 BN100LB4**	459

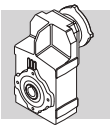

3.0 kW

n_2 min^{-1}	M_2 Nm	S	i	R_{n2} N				
5.0	5197	1.0	280.9	35000	**F704_280.9 S3 M3LB4**	452	**F704_280.9 P100 BN100LB4**	453
5.1	5067	1.6	273.9	45000	**F804_273.9 S3 M3LB4**	455	**F804_273.9 P100 BN100LB4**	456
5.2	4971	2.8	268.7	55000	**F904_268.7 S3 M3LB4**	458	**F904_268.7 P100 BN100LB4**	459
6.0	4340	1.2	234.6	35000	**F704_234.6 S3 M3LB4**	452	**F704_234.6 P100 BN100LB4**	453
6.1	4281	3.3	231.4	55000	**F904_231.4 S3 M3LB4**	458	**F904_231.4 P100 BN100LB4**	459
6.5	4006	1.2	216.5	35000	**F704_216.5 S3 M3LB4**	452	**F704_216.5 P100 BN100LB4**	453
6.5	4042	2.0	218.5	45000	**F804_218.5 S3 M3LB4**	455	**F804_218.5 P100 BN100LB4**	456
6.6	3951	3.5	213.6	55000	**F904_213.6 S3 M3LB4**	458	**F904_213.6 P100 BN100LB4**	459
7.2	3706	1.3	196.0	35000	**F703_196.0 S3 M3LB4**	452	**F703_196.0 P100 BN100LB4**	453
7.6	3490	2.3	184.6	45000	**F803_184.6 S3 M3LB4**	455	**F803_184.6 P100 BN100LB4**	456
7.8	3421	1.5	180.9	35000	**F703_180.9 S3 M3LB4**	452	**F703_180.9 P100 BN100LB4**	453
8.5	3151	1.6	166.7	35000	**F703_166.7 S3 M3LB4**	452	**F703_166.7 P100 BN100LB4**	453
8.7	3080	0.9	162.9	20000	**F603_162.9 S3 M3LB4**	448	**F603_162.9 P100 BN100LB4**	449
8.8	3029	2.6	160.2	45000	**F803_160.2 S3 M3LB4**	455	**F803_160.2 P100 BN100LB4**	456
9.2	2909	1.7	153.8	35000	**F703_153.8 S3 M3LB4**	452	**F703_153.8 P100 BN100LB4**	453
9.4	2843	1.0	150.4	20000	**F603_150.4 S3 M3LB4**	448	**F603_150.4 P100 BN100LB4**	449
9.5	2796	2.9	147.9	45000	**F803_147.9 S3 M3LB4**	455	**F803_147.9 P100 BN100LB4**	456
10.6	2514	2.0	133.0	35000	**F703_133.0 S3 M3LB4**	452	**F703_133.0 P100 BN100LB4**	453
10.6	2509	3.2	132.7	45000	**F803_132.7 S3 M3LB4**	455	**F803_132.7 P100 BN100LB4**	456
10.8	2467	1.2	130.5	20000	**F603_130.5 S3 M3LB4**	448	**F603_130.5 P100 BN100LB4**	449
11.5	2320	2.2	122.7	35000	**F703_122.7 S3 M3LB4**	452	**F703_122.7 P100 BN100LB4**	453
11.5	2316	3.5	122.5	45000	**F803_122.5 S3 M3LB4**	455	**F803_122.5 P100 BN100LB4**	456
11.7	2277	1.3	120.5	20000	**F603_120.5 S3 M3LB4**	448	**F603_120.5 P100 BN100LB4**	449
12.9	2072	2.4	109.6	35000	**F703_109.6 S3 M3LB4**	452	**F703_109.6 P100 BN100LB4**	453
13.3	2011	1.4	106.4	20000	**F603_106.4 S3 M3LB4**	448	**F603_106.4 P100 BN100LB4**	449
13.4	1987	0.9	105.1	12000	**F513_105.1 S3 M3LB4**	444	**F513_105.1 P100 BN100LB4**	445
13.9	1913	2.6	101.2	35000	**F703_101.2 S3 M3LB4**	452	**F703_101.2 P100 BN100LB4**	453
14.4	1857	1.6	98.2	20000	**F603_98.2 S3 M3LB4**	448	**F603_98.2 P100 BN100LB4**	449
15.2	1749	2.9	92.5	35000	**F703_92.5 S3 M3LB4**	452	**F703_92.5 P100 BN100LB4**	453
16.5	1614	3.1	85.4	35000	**F703_85.4 S3 M3LB4**	452	**F703_85.4 P100 BN100LB4**	453
16.8	1588	1.8	84.0	20000	**F603_84.0 S3 M3LB4**	448	**F603_84.0 P100 BN100LB4**	449
16.9	1574	1.1	83.2	12000	**F513_83.2 S3 M3LB4**	444	**F513_83.2 P100 BN100LB4**	445
18.2	1466	2.0	77.6	20000	**F603_77.6 S3 M3LB4**	448	**F603_77.6 P100 BN100LB4**	449
20.7	1291	2.2	68.3	20000	**F603_68.3 S3 M3LB4**	448	**F603_68.3 P100 BN100LB4**	449
21.4	1245	1.4	65.8	12000	**F513_65.8 S3 M3LB4**	444	**F513_65.8 P100 BN100LB4**	445
22.4	1192	2.4	63.0	20000	**F603_63.0 S3 M3LB4**	448	**F603_63.0 P100 BN100LB4**	449
23.4	1139	1.0	60.2	8500	**F413_60.2 S3 M3LB4**	440	**F413_60.2 P100 BN100LB4**	441
27.2	980	3.0	51.8	20000	**F603_51.8 S3 M3LB4**	448	**F603_51.8 P100 BN100LB4**	449
27.4	974	1.1	51.5	8500	**F413_51.5 S3 M3LB4**	440	**F413_51.5 P100 BN100LB4**	441
28.8	925	1.9	48.9	12000	**F513_48.9 S3 M3LB4**	444	**F513_48.9 P100 BN100LB4**	445
29.4	926	1.2	47.9	8500	**F412_47.9 S3 M3LB4**	440	**F412_47.9 P100 BN100LB4**	441
29.5	905	3.2	47.8	20000	**F603_47.8 S3 M3LB4**	448	**F603_47.8 P100 BN100LB4**	449
37	737	1.5	38.2	8500	**F412_38.2 S3 M3LB4**	440	**F412_38.2 P100 BN100LB4**	441
38	717	2.4	37.1	11800	**F512_37.1 S3 M3LB4**	444	**F512_37.1 P100 BN100LB4**	445
41	664	0.9	34.4	5810	**F312_34.4 S3 M3LB4**	436	**F312_34.4 P100 BN100LB4**	437
47	582	1.0	30.1	5770	**F312_30.1 S3 M3LB4**	436	**F312_30.1 P100 BN100LB4**	437
47	582	1.9	30.1	8290	**F412_30.1 S3 M3LB4**	440	**F412_30.1 P100 BN100LB4**	441
47	580	2.9	30.0	11200	**F512_30.0 S3 M3LB4**	444	**F512_30.0 P100 BN100LB4**	445
52	527	1.1	27.3	5720	**F312_27.3 S3 M3LB4**	436	**F312_27.3 P100 BN100LB4**	437
58	466	2.4	24.1	7960	**F412_24.1 S3 M3LB4**	440	**F412_24.1 P100 BN100LB4**	441
60	452	1.3	23.4	5620	**F312_23.4 S3 M3LB4**	436	**F312_23.4 P100 BN100LB4**	437

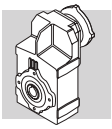

3.0 kW

n_2 min^{-1}	M_2 Nm	S	i	R_{n2} N				
65	421	0.9	21.8	2800	**F252_21.8 S3 M3LB4**	432	**F252_21.8 P100 BN100LB4**	433
67	408	1.5	21.1	5540	**F312_21.1 S3 M3LB4**	436	**F312_21.1 P100 BN100LB4**	437
75	365	3.0	18.9	7560	**F412_18.9 S3 M3LB4**	440	**F412_18.9 P100 BN100LB4**	441
76	359	1.1	18.6	2830	**F252_18.6 S3 M3LB4**	432	**F252_18.6 P100 BN100LB4**	433
76	357	1.7	18.5	5430	**F312_18.5 S3 M3LB4**	436	**F312_18.5 P100 BN100LB4**	437
82	331	3.2	17.1	7400	**F412_17.1 S3 M3LB4**	440	**F412_17.1 P100 BN100LB4**	441
84	324	1.8	16.8	5340	**F312_16.8 S3 M3LB4**	436	**F312_16.8 P100 BN100LB4**	437
85	321	1.2	16.6	2830	**F252_16.6 S3 M3LB4**	432	**F252_16.6 P100 BN100LB4**	433
97	279	1.4	14.5	2810	**F252_14.5 S3 M3LB4**	432	**F252_14.5 P100 BN100LB4**	433
101	269	2.2	13.9	5150	**F312_13.9 S3 M3LB4**	436	**F312_13.9 P100 BN100LB4**	437
109	251	1.6	13	2790	**F252_13.0 S3 M3LB4**	432	**F252_13.0 P100 BN100LB4**	433
111	246	2.4	12.7	5060	**F312_12.7 S3 M3LB4**	436	**F312_12.7 P100 BN100LB4**	437
131	208	2.9	10.7	4880	**F312_10.7 S3 M3LB4**	436	**F312_10.7 P100 BN100LB4**	437
133	205	1.9	10.6	2730	**F252_10.6 S3 M3LB4**	432	**F252_10.6 P100 BN100LB4**	433
151	181	1.5	9.4	2710	**F252_9.4 S3 M3LB4**	432	**F252_9.4 P100 BN100LB4**	433
156	174	2.2	9.0	4650	**F312_9.0 S3 M3LB4**	436	**F312_9.0 P100 BN100LB4**	437
161	169	0.9	8.7	1820	**F202_8.7 S3 M3LB4**	428	**F202_8.7 P100 BN100LB4**	429
168	162	1.6	8.4	2660	**F252_8.4 S3 M3LB4**	432	**F252_8.4 P100 BN100LB4**	433
171	159	2.5	8.2	4550	**F312_8.2 S3 M3LB4**	436	**F312_8.2 P100 BN100LB4**	437
180	151	1.0	7.8	1790	**F202_7.8 S3 M3LB4**	428	**F202_7.8 P100 BN100LB4**	429
203	134	2.9	6.9	4360	**F312_6.9 S3 M3LB4**	436	**F312_6.9 P100 BN100LB4**	437
205	133	1.9	6.9	2560	**F252_6.9 S3 M3LB4**	432	**F252_6.9 P100 BN100LB4**	433
220	124	1.0	6.4	1730	**F202_6.4 S3 M3LB4**	428	**F202_6.4 P100 BN100LB4**	429
220	124	2.9	13.0	2510	**F252_13.0 S3 M3LA2**	432	**F252_13.0 P100 BN100L2**	433
255	107	1.3	11.2	1680	**F202_11.2 S3 M3LA2**	428	**F202_11.2 P100 BN100L2**	429
269	101	3.2	10.6	2410	**F252_10.6 S3 M3LA2**	432	**F252_10.6 P100 BN100L2**	433
306	89	3.0	9.4	2350	**F252_9.4 S3 M3LA2**	432	**F252_9.4 P100 BN100L2**	433
328	83	1.5	8.7	1600	**F202_8.7 S3 M3LA2**	428	**F202_8.7 P100 BN100L2**	429
341	80	3.3	8.4	2290	**F252_8.4 S3 M3LA2**	432	**F252_8.4 P100 BN100L2**	433
365	75	1.5	7.8	1560	**F202_7.8 S3 M3LA2**	428	**F202_7.8 P100 BN100L2**	429
446	61	1.7	6.4	1480	**F202_6.4 S3 M3LA2**	428	**F202_6.4 P100 BN100L2**	429

4.0 kW

n_2 min^{-1}	M_2 Nm	S	i	R_{n2} N				
2.2	15542	0.9	625.6	55000	**F904_625.6 S3 M3LC4**	458	**F904_625.6 P112 BN112M4**	459
2.4	14347	1.0	577.5	55000	**F904_577.5 S3 M3LC4**	458	**F904_577.5 P112 BN112M4**	459
2.8	12311	1.1	495.6	55000	**F904_495.6 S3 M3LC4**	458	**F904_495.6 P112 BN112M4**	459
3.1	11364	1.2	457.5	55000	**F904_457.5 S3 M3LC4**	458	**F904_457.5 P112 BN112M4**	459
3.9	8989	1.6	361.8	55000	**F904_361.8 S3 M3LC4**	458	**F904_361.8 P112 BN112M4**	459
4.0	8786	0.9	353.7	45000	**F804_353.7 S3 M3LC4**	455	**F804_353.7 P112 BN112M4**	456
4.7	7371	1.1	296.7	45000	**F804_296.7 S3 M3LC4**	455	**F804_296.7 P112 BN112M4**	456
4.8	7232	1.9	291.1	55000	**F904_291.1 S3 M3LC4**	458	**F904_291.1 P112 BN112M4**	459
5.1	6804	1.2	273.9	45000	**F804_273.9 S3 M3LC4**	455	**F804_273.9 P112 BN112M4**	456
5.2	6676	2.1	268.7	55000	**F904_268.7 S3 M3LC4**	458	**F904_268.7 P112 BN112M4**	459
6.0	5827	0.9	234.6	35000	**F704_234.6 S3 M3LC4**	452	**F704_234.6 P112 BN112M4**	453
6.1	5748	2.4	231.4	55000	**F904_231.4 S3 M3LC4**	458	**F904_231.4 P112 BN112M4**	459
6.4	5428	1.5	218.5	45000	**F804_218.5 S3 M3LC4**	455	**F804_218.5 P112 BN112M4**	456

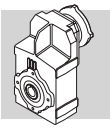

4.0 kW

n_2 min^{-1}	M_2 Nm	S	i	R_{n2} N				
6.5	5379	0.9	216.5	35000	**F704_216.5 S3 M3LC4**	452	**F704_216.5 P112 BN112M4**	453
6.6	5306	2.6	213.6	55000	**F904_213.6 S3 M3LC4**	458	**F904_213.6 P112 BN112M4**	459
7.1	4977	1.0	196.0	35000	**F703_196.0 S3 M3LC4**	452	**F703_196.0 P112 BN112M4**	453
7.2	4929	2.8	194.2	55000	**F903_194.2 S3 M3LC4**	458	**F903_194.2 P112 BN112M4**	459
7.6	4687	1.7	184.6	45000	**F803_184.6 S3 M3LC4**	455	**F803_184.6 P112 BN112M4**	456
7.7	4594	1.1	180.9	35000	**F703_180.9 S3 M3LC4**	452	**F703_180.9 P112 BN112M4**	453
7.8	4550	3.1	179.2	55000	**F903_179.2 S3 M3LC4**	458	**F903_179.2 P112 BN112M4**	459
8.4	4232	1.2	166.7	35000	**F703_166.7 S3 M3LC4**	452	**F703_166.7 P112 BN112M4**	453
8.6	4134	3.4	162.8	55000	**F903_162.8 S3 M3LC4**	458	**F903_162.8 P112 BN112M4**	459
8.7	4068	2.0	160.2	45000	**F803_160.2 S3 M3LC4**	455	**F803_160.2 P112 BN112M4**	456
9.1	3906	1.3	153.8	35000	**F703_153.8 S3 M3LC4**	452	**F703_153.8 P112 BN112M4**	453
9.5	3755	2.1	147.9	45000	**F803_147.9 S3 M3LC4**	455	**F803_147.9 P112 BN112M4**	456
10.5	3376	1.5	133.0	35000	**F703_133.0 S3 M3LC4**	452	**F703_133.0 P112 BN112M4**	453
10.6	3369	2.4	132.7	45000	**F803_132.7 S3 M3LC4**	455	**F803_132.7 P112 BN112M4**	456
11.4	3116	1.6	122.7	35000	**F703_122.7 S3 M3LC4**	452	**F703_122.7 P112 BN112M4**	453
11.4	3110	2.6	122.5	45000	**F803_122.5 S3 M3LC4**	455	**F803_122.5 P112 BN112M4**	456
11.6	3058	0.9	120.5	20000	**F603_120.5 S3 M3LC4**	448	**F603_120.5 P112 BN112M4**	449
12.3	2888	2.8	113.8	45000	**F803_113.8 S3 M3LC4**	455	**F803_113.8 P112 BN112M4**	456
12.8	2783	1.8	109.6	35000	**F703_109.6 S3 M3LC4**	452	**F703_109.6 P112 BN112M4**	453
13.2	2701	1.1	106.4	20000	**F603_106.4 S3 M3LC4**	448	**F603_106.4 P112 BN112M4**	449
13.8	2569	1.9	101.2	35000	**F703_101.2 S3 M3LC4**	452	**F703_101.2 P112 BN112M4**	453
14.3	2493	1.2	98.2	20000	**F603_98.2 S3 M3LC4**	448	**F603_98.2 P112 BN112M4**	449
15.1	2348	2.1	92.5	35000	**F703_92.5 S3 M3LC4**	452	**F703_92.5 P112 BN112M4**	453
16.4	2168	2.3	85.4	35000	**F703_85.4 S3 M3LC4**	452	**F703_85.4 P112 BN112M4**	453
16.7	2133	1.4	84.0	20000	**F603_84.0 S3 M3LC4**	448	**F603_84.0 P112 BN112M4**	449
18.1	1969	1.5	77.6	20000	**F603_77.6 S3 M3LC4**	448	**F603_77.6 P112 BN112M4**	449
20.5	1734	1.7	68.3	20000	**F603_68.3 S3 M3LC4**	448	**F603_68.3 P112 BN112M4**	449
21.3	1672	1.1	65.8	12000	**F513_65.8 S3 M3LC4**	444	**F513_65.8 P112 BN112M4**	445
22.2	1600	1.8	63.0	20000	**F603_63.0 S3 M3LC4**	448	**F603_63.0 P112 BN112M4**	449
27.0	1316	2.2	51.8	20000	**F603_51.8 S3 M3LC4**	448	**F603_51.8 P112 BN112M4**	449
28.6	1242	1.4	48.9	11600	**F513_48.9 S3 M3LC4**	444	**F513_48.9 P112 BN112M4**	445
29.3	1215	2.4	47.8	20000	**F603_47.8 S3 M3LC4**	448	**F603_47.8 P112 BN112M4**	449
33	1069	2.7	42.1	20000	**F603_42.1 S3 M3LC4**	448	**F603_42.1 P112 BN112M4**	449
36	986	2.9	38.8	20000	**F603_38.8 S3 M3LC4**	448	**F603_38.8 P112 BN112M4**	449
37	990	1.1	38.2	7720	**F412_38.2 S3 M3LC4**	440	**F412_38.2 P112 BN112M4**	441
38	963	1.8	37.1	11200	**F512_37.1 S3 M3LC4**	444	**F512_37.1 P112 BN112M4**	445
46	781	1.4	30.1	7610	**F412_30.1 S3 M3LC4**	440	**F412_30.1 P112 BN112M4**	441
47	779	2.2	30.0	10700	**F512_30.0 S3 M3LC4**	444	**F512_30.0 P112 BN112M4**	445
55	645	2.9	25.4	20000	**F603_25.4 S3 M3LC4**	448	**F603_25.4 P112 BN112M4**	449
58	625	1.8	24.1	7420	**F412_24.1 S3 M3LC4**	440	**F412_24.1 P112 BN112M4**	441
59	617	2.7	23.8	10200	**F512_23.8 S3 M3LC4**	444	**F512_23.8 P112 BN112M4**	445
60	607	1.0	23.4	5040	**F312_23.4 S3 M3LC4**	436	**F312_23.4 P112 BN112M4**	437
60	596	3.2	23.5	20000	**F603_23.5 S3 M3LC4**	448	**F603_23.5 P112 BN112M4**	449
66	548	1.1	21.1	5020	**F312_21.1 S3 M3LC4**	436	**F312_21.1 P112 BN112M4**	437
74	490	2.2	18.9	7150	**F412_18.9 S3 M3LC4**	440	**F412_18.9 P112 BN112M4**	441
74	488	3.2	18.8	9640	**F512_18.8 S3 M3LC4**	444	**F512_18.8 P112 BN112M4**	445
76	479	1.3	18.5	4980	**F312_18.5 S3 M3LC4**	436	**F312_18.5 P112 BN112M4**	437
82	444	2.4	17.1	7030	**F412_17.1 S3 M3LC4**	440	**F412_17.1 P112 BN112M4**	441
83	436	1.4	16.8	4930	**F312_16.8 S3 M3LC4**	436	**F312_16.8 P112 BN112M4**	437
84	431	0.9	16.6	2380	**F252_16.6 S3 M3LC4**	432	**F252_16.6 P112 BN112M4**	433
96	379	2.7	14.6	6820	**F412_14.6 S3 M3LC4**	440	**F412_14.6 P112 BN112M4**	441

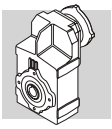

4.0 kW

n_2 min-1	M_2 Nm	S	i	R_{n2} N				
97	375	1.1	14.5	2420	**F252_14.5 S3 M3LC4**	432	**F252_14.5 P112 BN112M4**	433
100	362	1.7	13.9	4820	**F312_13.9 S3 M3LC4**	436	**F312_13.9 P112 BN112M4**	437
108	337	1.2	13.0	2440	**F252_13.0 S3 M3LC4**	432	**F252_13.0 P112 BN112M4**	433
110	330	1.8	12.7	4750	**F312_12.7 S3 M3LC4**	436	**F312_12.7 P112 BN112M4**	437
130	279	2.2	10.7	4620	**F312_10.7 S3 M3LC4**	436	**F312_10.7 P112 BN112M4**	437
130	279	3.2	10.8	6380	**F412_10.8 S3 M3LC4**	440	**F412_10.8 P112 BN112M4**	441
132	276	1.4	10.6	2450	**F252_10.6 S3 M3LC4**	432	**F252_10.6 P112 BN112M4**	433
150	243	1.1	9.4	2470	**F252_9.4 S3 M3LC4**	432	**F252_9.4 P112 BN112M4**	433
153	237	3.0	9.1	6160	**F412_9.1 S3 M3LC4**	440	**F412_9.1 P112 BN112M4**	441
155	234	1.7	9.0	4420	**F312_9.0 S3 M3LC4**	436	**F312_9.0 P112 BN112M4**	437
167	218	1.2	8.4	2450	**F252_8.4 S3 M3LC4**	432	**F252_8.4 P112 BN112M4**	433
170	213	1.8	8.2	4350	**F312_8.2 S3 M3LC4**	436	**F312_8.2 P112 BN112M4**	437
201	180	2.2	6.9	4200	**F312_6.9 S3 M3LC4**	436	**F312_6.9 P112 BN112M4**	437
204	178	1.4	6.9	2390	**F252_6.9 S3 M3LC4**	432	**F252_6.9 P112 BN112M4**	433
206	176	3.2	13.9	4200	**F312_13.9 S3 M3LB2**	436	**F312_13.9 P100 BN100LB2**	437
221	164	2.2	13.0	2340	**F252_13.0 S3 M3LB2**	432	**F252_13.0 P112 BN112M2**	433
226	161	3.4	12.7	4120	**F312_12.7 S3 M3LB2**	436	**F312_12.7 P100 BN100LB2**	437
255	142	1.0	11.2	1570	**F202_11.2 S3 M3LB2**	428	**F202_11.2 P100 BN100LB2**	429
270	134	2.4	10.6	2270	**F252_10.6 S3 M3LB2**	432	**F252_10.6 P112 BN112M2**	433
307	118	2.2	9.4	2230	**F252_9.4 S3 M3LB2**	432	**F252_9.4 P112 BN112M2**	433
318	114	3.4	9.0	3760	**F312_9.0 S3 M3LB2**	436	**F312_9.0 P100 BN100LB2**	437
329	110	1.1	8.7	1510	**F202_8.7 S3 M3LB2**	428	**F202_8.7 P100 BN100LB2**	429
342	106	2.4	8.4	2190	**F252_8.4 S3 M3LB2**	432	**F252_8.4 P112 BN112M2**	433
366	99	1.2	7.8	1480	**F202_7.8 S3 M3LB2**	428	**F202_7.8 P100 BN100LB2**	429
418	87	2.7	6.9	2090	**F252_6.9 S3 M3LB2**	432	**F252_6.9 P112 BN112M2**	433
448	81	1.3	6.4	1420	**F202_6.4 S3 M3LB2**	428	**F202_6.4 P100 BN100LB2**	429

5.5 kW

n_2 min-1	M_2 Nm	S	i	R_{n2} N				
2.9	16458	0.9	495.6	55000	**F904_495.6 S4 M4SA4**	458	**F904_495.6 P132 BN132S4**	459
3.1	15192	0.9	457.5	55000	**F904_457.5 S4 M4SA4**	458	**F904_457.5 P132 BN132S4**	459
4.0	12017	1.2	361.8	55000	**F904_361.8 S4 M4SA4**	458	**F904_361.8 P132 BN132S4**	459
4.9	9668	1.4	291.1	55000	**F904_291.1 S4 M4SA4**	458	**F904_291.1 P132 BN132S4**	459
5.3	9096	0.9	273.9	45000	**F804_273.9 S4 M4SA4**	455	**F804_273.9 P132 BN132S4**	456
5.4	8925	1.6	268.7	55000	**F904_268.7 S4 M4SA4**	458	**F904_268.7 P132 BN132S4**	459
6.2	7685	1.8	231.4	55000	**F904_231.4 S4 M4SA4**	458	**F904_231.4 P132 BN132S4**	459
6.6	7256	1.1	218.5	45000	**F804_218.5 S4 M4SA4**	455	**F804_218.5 P132 BN132S4**	456
6.7	7093	2	213.6	55000	**F904_213.6 S4 M4SA4**	458	**F904_213.6 P132 BN132S4**	459
7.4	6590	2.1	194.2	55000	**F903_194.2 S4 M4SA4**	458	**F903_194.2 P132 BN132S4**	459
7.8	6266	1.3	184.6	45000	**F803_184.6 S4 M4SA4**	455	**F803_184.6 P132 BN132S4**	456
8.0	6083	2.3	179.2	55000	**F903_179.2 S4 M4SA4**	458	**F903_179.2 P132 BN132S4**	459
8.8	5527	2.5	162.8	55000	**F903_162.8 S4 M4SA4**	458	**F903_162.8 P132 BN132S4**	459
9.0	5438	1.5	160.2	45000	**F803_160.2 S4 M4SA4**	455	**F803_160.2 P132 BN132S4**	456
9.4	5222	1.0	153.8	35000	**F703_153.8 S4 M4SA4**	452	**F703_153.8 P132 BN132S4**	453
9.6	5101	2.7	150.3	55000	**F903_150.3 S4 M4SA4**	458	**F903_150.3 P132 BN132S4**	459
9.7	5020	1.6	147.9	45000	**F803_147.9 S4 M4SA4**	455	**F803_147.9 P132 BN132S4**	456
10.5	4661	3.0	137.3	55000	**F903_137.3 S4 M4SA4**	458	**F903_137.3 P132 BN132S4**	459

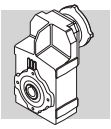

5.5 kW

n_2 min^{-1}	M_2 Nm	S	i	R_{n2} N				
10.8	4513	1.1	133	35000	**F703_133.0 S4 M4SA4**	452	**F703_133.0 P132 BN132S4**	453
10.9	4504	1.8	132.7	45000	**F803_132.7 S4 M4SA4**	455	**F803_132.7 P132 BN132S4**	456
11.4	4303	3.3	126.8	55000	**F903_126.8 S4 M4SA4**	458	**F903_126.8 P132 BN132S4**	459
11.7	4165	1.2	122.7	35000	**F703_122.7 S4 M4SA4**	452	**F703_122.7 P132 BN132S4**	453
11.8	4157	1.9	122.5	45000	**F803_122.5 S4 M4SA4**	455	**F803_122.5 P132 BN132S4**	456
12.7	3861	2.1	113.8	45000	**F803_113.8 S4 M4SA4**	455	**F803_113.8 P132 BN132S4**	456
13.1	3720	1.3	109.6	35000	**F703_109.6 S4 M4SA4**	452	**F703_109.6 P132 BN132S4**	453
14.2	3434	1.5	101.2	35000	**F703_101.2 S4 M4SA4**	452	**F703_101.2 P132 BN132S4**	453
15.6	3139	1.6	92.5	35000	**F703_92.5 S4 M4SA4**	452	**F703_92.5 P132 BN132S4**	453
15.6	3133	2.6	92.3	45000	**F803_92.3 S4 M4SA4**	455	**F803_92.3 P132 BN132S4**	456
16.9	2898	1.7	85.4	35000	**F703_85.4 S4 M4SA4**	452	**F703_85.4 P132 BN132S4**	453
16.9	2892	2.8	85.2	45000	**F803_85.2 S4 M4SA4**	455	**F803_85.2 P132 BN132S4**	456
17.1	2852	1.0	84	20000	**F603_84.0 S4 M4SA4**	448	**F603_84.0 P132 BN132S4**	449
18.6	2632	1.1	77.6	20000	**F603_77.6 S4 M4SA4**	448	**F603_77.6 P132 BN132S4**	449
18.9	2588	3.1	76.3	45000	**F803_76.3 S4 M4SA4**	455	**F803_76.3 P132 BN132S4**	456
19.6	2497	2.0	73.6	35000	**F703_73.6 S4 M4SA4**	452	**F703_73.6 P132 BN132S4**	453
20.5	2389	3.3	70.4	45000	**F803_70.4 S4 M4SA4**	455	**F803_70.4 P132 BN132S4**	456
21.1	2317	1.3	68.3	20000	**F603_68.3 S4 M4SA4**	448	**F603_68.3 P132 BN132S4**	449
21.2	2305	2.2	67.9	35000	**F703_67.9 S4 M4SA4**	452	**F703_67.9 P132 BN132S4**	453
22.8	2139	1.4	63	20000	**F603_63.0 S4 M4SA4**	448	**F603_63.0 P132 BN132S4**	449
23.0	2121	2.4	62.5	35000	**F703_62.5 S4 M4SA4**	452	**F703_62.5 P132 BN132S4**	453
25.0	1958	2.6	57.7	35000	**F703_57.7 S4 M4SA4**	452	**F703_57.7 P132 BN132S4**	453
27.8	1759	1.6	51.8	20000	**F603_51.8 S4 M4SA4**	448	**F603_51.8 P132 BN132S4**	449
29.4	1660	1.1	48.9	10300	**F513_48.9 S4 M4SA4**	444	**F513_48.9 P132 BN132S4**	445
29.4	1662	3	49.0	35000	**F703_49.0 S4 M4SA4**	452	**F703_49.0 P132 BN132S4**	453
30.0	1624	1.8	47.8	20000	**F603_47.8 S4 M4SA4**	448	**F603_47.8 P132 BN132S4**	449
32	1534	3.3	45.2	34300	**F703_45.2 S4 M4SA4**	452	**F703_45.2 P132 BN132S4**	453
34	1428	2.0	42.1	20000	**F603_42.1 S4 M4SA4**	448	**F603_42.1 P132 BN132S4**	449
37	1319	2.2	38.8	20000	**F603_38.8 S4 M4SA4**	448	**F603_38.8 P132 BN132S4**	449
39	1288	1.3	37.1	10300	**F512_37.1 S4 M4SA4**	444	**F512_37.1 P132 BN132S4**	445
45	1089	2.7	32.1	20000	**F603_32.1 S4 M4SA4**	448	**F603_32.1 P132 BN132S4**	449
48	1044	1.1	30.1	6580	**F412_30.1 S4 M4SA4**	440	**F412_30.1 P132 BN132S4**	441
48	1041	1.6	30	9950	**F512_30.0 S4 M4SA4**	444	**F512_30.0 P132 BN132S4**	445
49	1005	2.9	29.6	20000	**F603_29.6 S4 M4SA4**	448	**F603_29.6 P132 BN132S4**	449
57	863	2.2	25.4	20000	**F603_25.4 S4 M4SA4**	448	**F603_25.4 P132 BN132S4**	449
60	836	1.3	24.1	6580	**F412_24.1 S4 M4SA4**	440	**F412_24.1 P132 BN132S4**	441
61	825	2.0	23.8	9560	**F512_23.8 S4 M4SA4**	444	**F512_23.8 P132 BN132S4**	445
61	796	2.4	23.5	20000	**F603_23.5 S4 M4SA4**	448	**F603_23.5 P132 BN132S4**	449
70	701	2.7	20.7	20000	**F603_20.7 S4 M4SA4**	448	**F603_20.7 P132 BN132S4**	449
76	655	1.7	18.9	6480	**F412_18.9 S4 M4SA4**	440	**F412_18.9 P132 BN132S4**	441
76	647	2.9	19.1	20000	**F603_19.1 S4 M4SA4**	448	**F603_19.1 P132 BN132S4**	449
77	653	2.4	18.8	9110	**F512_18.8 S4 M4SA4**	444	**F512_18.8 P132 BN132S4**	445
84	593	1.8	17.1	6410	**F412_17.1 S4 M4SA4**	440	**F412_17.1 P132 BN132S4**	441
98	507	2.0	14.6	6280	**F412_14.6 S4 M4SA4**	440	**F412_14.6 P132 BN132S4**	441
103	485	2.9	14.0	8520	**F512_14.0 S4 M4SA4**	444	**F512_14.0 P132 BN132S4**	445
130	385	3.5	11.1	8050	**F512_11.1 S4 M4SA4**	444	**F512_11.1 P132 BN132S4**	445
134	373	2.4	10.8	5970	**F412_10.8 S4 M4SA4**	440	**F412_10.8 P132 BN132S4**	441
158	317	2.2	9.1	5810	**F412_9.1 S4 M4SA4**	440	**F412_9.1 P132 BN132S4**	441
159	314	3.5	9.1	7590	**F512_9.1 S4 M4SA4**	444	**F512_9.1 P132 BN132S4**	445
198	253	3.3	14.6	5510	**F412_14.6 S4 M4SA2**	440	**F412_14.6 P132 BN132SA2**	441
214	233	2.7	6.7	5430	**F412_6.7 S4 M4SA4**	440	**F412_6.7 P132 BN132S4**	441

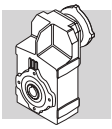

5.5 kW

n_2 min^{-1}	M_2 Nm	S	i	R_{n2} N				
268	186	3.9	10.8	5120	**F412_10.8 S4 M4SA2**	440	**F412_10.8 P132 BN132SA2**	441
316	158	3.9	9.1	4930	**F412_9.1 S4 M4SA2**	440	**F412_9.1 P132 BN132SA2**	441

7.5 kW

n_2 min^{-1}	M_2 Nm	S	i	R_{n2} N				
4.0	16387	0.9	361.8	55000	**F904_361.8 S4 M4LA4**	458	**F904_361.8 P132 BN132MA4**	459
4.9	13184	1.1	291.1	55000	**F904_291.1 S4 M4LA4**	458	**F904_291.1 P132 BN132MA4**	459
5.4	12170	1.2	268.7	55000	**F904_268.7 S4 M4LA4**	458	**F904_268.7 P132 BN132MA4**	459
6.2	10479	1.3	231.4	55000	**F904_231.4 S4 M4LA4**	458	**F904_231.4 P132 BN132MA4**	459
6.7	9673	1.4	213.6	55000	**F904_213.6 S4 M4LA4**	458	**F904_213.6 P132 BN132MA4**	459
7.4	8986	1.6	194.2	55000	**F903_194.2 S4 M4LA4**	458	**F903_194.2 P132 BN132MA4**	459
7.8	8544	0.9	184.6	45000	**F803_184.6 S4 M4LA4**	455	**F803_184.6 P132 BN132MA4**	456
8.0	8295	1.7	179.2	55000	**F903_179.2 S4 M4LA4**	458	**F903_179.2 P132 BN132MA4**	459
8.8	7536	1.9	162.8	55000	**F903_162.8 S4 M4LA4**	458	**F903_162.8 P132 BN132MA4**	459
9.0	7416	1.1	160.2	45000	**F803_160.2 S4 M4LA4**	455	**F803_160.2 P132 BN132MA4**	456
9.6	6956	2	150.3	55000	**F903_150.3 S4 M4LA4**	458	**F903_150.3 P132 BN132MA4**	459
9.7	6845	1.2	147.9	45000	**F803_147.9 S4 M4LA4**	455	**F803_147.9 P132 BN132MA4**	456
10.5	6356	2.2	137.3	55000	**F903_137.3 S4 M4LA4**	458	**F903_137.3 P132 BN132MA4**	459
10.9	6141	1.3	132.7	45000	**F803_132.7 S4 M4LA4**	455	**F803_132.7 P132 BN132MA4**	456
11.4	5867	2.4	126.8	55000	**F903_126.8 S4 M4LA4**	458	**F903_126.8 P132 BN132MA4**	459
11.8	5669	1.4	122.5	45000	**F803_122.5 S4 M4LA4**	455	**F803_122.5 P132 BN132MA4**	456
12.7	5265	1.5	113.8	45000	**F803_113.8 S4 M4LA4**	455	**F803_113.8 P132 BN132MA4**	456
12.9	5181	2.7	111.9	55000	**F903_111.9 S4 M4LA4**	458	**F903_111.9 P132 BN132MA4**	459
13.1	5073	1.0	109.6	35000	**F703_109.6 S4 M4LA4**	452	**F703_109.6 P132 BN132MA4**	453
13.9	4783	2.9	103.3	55000	**F903_103.3 S4 M4LA4**	458	**F903_103.3 P132 BN132MA4**	459
14.2	4683	1.1	101.2	35000	**F703_101.2 S4 M4LA4**	452	**F703_101.2 P132 BN132MA4**	453
15.0	4432	3.2	95.8	55000	**F903_95.8 S4 M4LA4**	458	**F903_95.8 P132 BN132MA4**	459
15.6	4281	1.2	92.5	35000	**F703_92.5 S4 M4LA4**	452	**F703_92.5 P132 BN132MA4**	453
15.6	4272	1.9	92.3	45000	**F803_92.3 S4 M4LA4**	455	**F803_92.3 P132 BN132MA4**	456
16.3	4091	3.4	88.4	55000	**F903_88.4 S4 M4LA4**	458	**F903_88.4 P132 BN132MA4**	459
16.9	3952	1.3	85.4	35000	**F703_85.4 S4 M4LA4**	452	**F703_85.4 P132 BN132MA4**	453
16.9	3944	2.0	85.2	45000	**F803_85.2 S4 M4LA4**	455	**F803_85.2 P132 BN132MA4**	456
18.9	3529	2.3	76.3	45000	**F803_76.3 S4 M4LA4**	455	**F803_76.3 P132 BN132MA4**	456
19.6	3404	1.5	73.6	35000	**F703_73.6 S4 M4LA4**	452	**F703_73.6 P132 BN132MA4**	453
20.5	3258	2.5	70.4	44700	**F803_70.4 S4 M4LA4**	455	**F803_70.4 P132 BN132MA4**	456
21.1	3160	0.9	68.3	20000	**F603_68.3 S4 M4LA4**	448	**F603_68.3 P132 BN132MA4**	449
21.2	3143	1.6	67.9	35000	**F703_67.9 S4 M4LA4**	452	**F703_67.9 P132 BN132MA4**	453
22.8	2917	1.0	63.0	20000	**F603_63.0 S4 M4LA4**	448	**F603_63.0 P132 BN132MA4**	449
23.0	2893	1.7	62.5	35000	**F703_62.5 S4 M4LA4**	452	**F703_62.5 P132 BN132MA4**	453
23.4	2844	2.8	61.5	43500	**F803_61.5 S4 M4LA4**	455	**F803_61.5 P132 BN132MA4**	456
25.0	2670	1.9	57.7	34900	**F703_57.7 S4 M4LA4**	452	**F703_57.7 P132 BN132MA4**	453
25.4	2626	3.0	56.7	42600	**F803_56.7 S4 M4LA4**	455	**F803_56.7 P132 BN132MA4**	456
27.8	2399	1.2	51.8	20000	**F603_51.8 S4 M4LA4**	448	**F603_51.8 P132 BN132MA4**	449
29.4	2266	2.2	49.0	33800	**F703_49.0 S4 M4LA4**	452	**F703_49.0 P132 BN132MA4**	453
30.0	2214	1.3	47.8	20000	**F603_47.8 S4 M4LA4**	448	**F603_47.8 P132 BN132MA4**	449
32	2092	2.4	45.2	33200	**F703_45.2 S4 M4LA4**	452	**F703_45.2 P132 BN132MA4**	453
34	1948	1.5	42.1	20000	**F603_42.1 S4 M4LA4**	448	**F603_42.1 P132 BN132MA4**	449

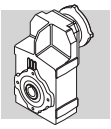

7.5 kW

n_2 min-1	M_2 Nm	S	i	R_{n2} N				
37	1798	1.6	38.8	20000	**F603_38.8 S4 M4LA4**	448	**F603_38.8 P132 BN132MA4**	449
39	1756	1.0	37.1	9090	**F512_37.1 S4 M4LA4**	444	**F512_37.1 P132 BN132MA4**	445
45	1485	2.0	32.1	20000	**F603_32.1 S4 M4LA4**	448	**F603_32.1 P132 BN132MA4**	449
48	1420	1.2	30.0	9010	**F512_30.0 S4 M4LA4**	444	**F512_30.0 P132 BN132MA4**	445
49	1371	2.1	29.6	20000	**F603_29.6 S4 M4LA4**	448	**F603_29.6 P132 BN132MA4**	449
57	1176	1.6	25.4	20000	**F603_25.4 S4 M4LA4**	448	**F603_25.4 P132 BN132MA4**	449
59	1137	3.5	24.6	28800	**F703_24.6 S4 M4LA4**	452	**F703_24.6 P132 BN132MA4**	453
60	1140	1.0	24.1	5500	**F412_24.1 S4 M4LA4**	440	**F412_24.1 P132 BN132MA4**	441
61	1125	1.5	23.8	8810	**F512_23.8 S4 M4LA4**	444	**F512_23.8 P132 BN132MA4**	445
61	1086	1.7	23.5	20000	**F603_23.5 S4 M4LA4**	448	**F603_23.5 P132 BN132MA4**	449
70	956	2.0	20.7	20000	**F603_20.7 S4 M4LA4**	448	**F603_20.7 P132 BN132MA4**	449
76	893	1.2	18.9	5630	**F412_18.9 S4 M4LA4**	440	**F412_18.9 P132 BN132MA4**	441
76	883	2.2	19.1	20000	**F603_19.1 S4 M4LA4**	448	**F603_19.1 P132 BN132MA4**	449
77	890	1.7	18.8	8520	**F512_18.8 S4 M4LA4**	444	**F512_18.8 P132 BN132MA4**	445
84	809	1.3	17.1	5650	**F412_17.1 S4 M4LA4**	440	**F412_17.1 P132 BN132MA4**	441
92	726	2.6	15.7	20000	**F603_15.7 S4 M4LA4**	448	**F603_15.7 P132 BN132MA4**	449
98	692	1.5	14.6	5630	**F412_14.6 S4 M4LA4**	440	**F412_14.6 P132 BN132MA4**	441
99	670	2.8	14.5	20000	**F603_14.5 S4 M4LA4**	448	**F603_14.5 P132 BN132MA4**	449
103	661	2.1	14.0	8080	**F512_14.0 S4 M4LA4**	444	**F512_14.0 P132 BN132MA4**	445
113	589	3.2	12.7	19900	**F603_12.7 S4 M4LA4**	448	**F603_12.7 P132 BN132MA4**	449
123	544	3.5	11.8	19500	**F603_11.8 S4 M4LA4**	448	**F603_11.8 P132 BN132MA4**	449
130	525	2.5	11.1	7700	**F512_11.1 S4 M4LA4**	444	**F512_11.1 P132 BN132MA4**	445
134	509	1.8	10.8	5490	**F412_10.8 S4 M4LA4**	440	**F412_10.8 P132 BN132MA4**	441
158	432	1.6	9.1	5410	**F412_9.1 S4 M4LA4**	440	**F412_9.1 P132 BN132MA4**	441
159	428	2.6	9.1	7290	**F512_9.1 S4 M4LA4**	444	**F512_9.1 P132 BN132MA4**	445
200	340	2.9	7.2	6900	**F512_7.2 S4 M4LA4**	444	**F512_7.2 P132 BN132MA4**	445
214	318	2.0	6.7	5140	**F412_6.7 S4 M4LA4**	440	**F412_6.7 P132 BN132MA4**	441
269	253	2.9	10.8	4880	**F412_10.8 S4 M4SB2**	440	**F412_10.8 P132 BN132SB2**	441
317	214	2.8	9.1	4730	**F412_9.1 S4 M4SB2**	440	**F412_9.1 P132 BN132SB2**	441
431	158	3.3	6.7	4390	**F412_6.7 S4 M4SB2**	440	**F412_6.7 P132 BN132SB2**	441

9.2 kW

n_2 min-1	M_2 Nm	S	i	R_{n2} N				
4.9	16172	0.9	291.1	55000	**F904_291.1 S4 M4LB4**	458	**F904_291.1 P132 BN132MB4**	459
5.4	14928	0.9	268.7	55000	**F904_268.7 S4 M4LB4**	458	**F904_268.7 P132 BN132MB4**	459
6.2	12854	1.1	231.4	55000	**F904_231.4 S4 M4LB4**	458	**F904_231.4 P132 BN132MB4**	459
6.7	11865	1.2	213.6	55000	**F904_213.6 S4 M4LB4**	458	**F904_213.6 P132 BN132MB4**	459
7.4	11023	1.3	194.2	55000	**F903_194.2 S4 M4LB4**	458	**F903_194.2 P132 BN132MB4**	459
8.0	10175	1.4	179.2	55000	**F903_179.2 S4 M4LB4**	458	**F903_179.2 P132 BN132MB4**	459
8.8	9244	1.5	162.8	55000	**F903_162.8 S4 M4LB4**	458	**F903_162.8 P132 BN132MB4**	459
9.6	8533	1.6	150.3	55000	**F903_150.3 S4 M4LB4**	458	**F903_150.3 P132 BN132MB4**	459
9.7	8397	1.0	147.9	45000	**F803_147.9 S4 M4LB4**	455	**F803_147.9 P132 BN132MB4**	456
10.5	7797	1.8	137.3	55000	**F903_137.3 S4 M4LB4**	458	**F903_137.3 P132 BN132MB4**	459
10.9	7533	1.1	132.7	45000	**F803_132.7 S4 M4LB4**	455	**F803_132.7 P132 BN132MB4**	456
11.4	7197	1.9	126.8	55000	**F903_126.8 S4 M4LB4**	458	**F903_126.8 P132 BN132MB4**	459
11.8	6954	1.2	122.5	45000	**F803_122.5 S4 M4LB4**	455	**F803_122.5 P132 BN132MB4**	456
12.7	6458	1.2	113.8	45000	**F803_113.8 S4 M4LB4**	455	**F803_113.8 P132 BN132MB4**	456

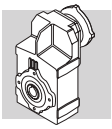

9.2 kW

n_2 min^{-1}	M_2 Nm	S	i	R_{n2} N				
12.9	6355	2.2	111.9	55000	**F903_111.9 S4 M4LB4**	458	**F903_111.9 P132 BN132MB4**	459
13.9	5867	2.4	103.3	55000	**F903_103.3 S4 M4LB4**	458	**F903_103.3 P132 BN132MB4**	459
15.0	5437	2.6	95.8	55000	**F903_95.8 S4 M4LB4**	458	**F903_95.8 P132 BN132MB4**	459
15.6	5251	1.0	92.5	35000	**F703_92.5 S4 M4LB4**	452	**F703_92.5 P132 BN132MB4**	453
15.6	5241	1.5	92.3	45000	**F803_92.3 S4 M4LB4**	455	**F803_92.3 P132 BN132MB4**	456
16.3	5018	2.8	88.4	55000	**F903_88.4 S4 M4LB4**	458	**F903_88.4 P132 BN132MB4**	459
16.9	4848	1.0	85.4	35000	**F703_85.4 S4 M4LB4**	452	**F703_85.4 P132 BN132MB4**	453
16.9	4837	1.7	85.2	45000	**F803_85.2 S4 M4LB4**	455	**F803_85.2 P132 BN132MB4**	456
18.8	4352	3.2	76.7	55000	**F903_76.7 S4 M4LB4**	458	**F903_76.7 P132 BN132MB4**	459
18.9	4329	1.8	76.3	44100	**F803_76.3 S4 M4LB4**	455	**F803_76.3 P132 BN132MB4**	456
19.6	4176	1.2	73.6	35000	**F703_73.6 S4 M4LB4**	452	**F703_73.6 P132 BN132MB4**	453
20.4	4017	3.5	70.8	55000	**F903_70.8 S4 M4LB4**	458	**F903_70.8 P132 BN132MB4**	459
20.5	3996	2.0	70.4	43700	**F803_70.4 S4 M4LB4**	455	**F803_70.4 P132 BN132MB4**	456
21.2	3855	1.3	67.9	34600	**F703_67.9 S4 M4LB4**	452	**F703_67.9 P132 BN132MB4**	453
23.0	3548	1.4	62.5	34200	**F703_62.5 S4 M4LB4**	452	**F703_62.5 P132 BN132MB4**	453
23.4	3489	2.3	61.5	42200	**F803_61.5 S4 M4LB4**	455	**F803_61.5 P132 BN132MB4**	456
25.0	3275	1.5	57.7	33700	**F703_57.7 S4 M4LB4**	452	**F703_57.7 P132 BN132MB4**	453
25.4	3221	2.5	56.7	41400	**F803_56.7 S4 M4LB4**	455	**F803_56.7 P132 BN132MB4**	456
27.8	2942	1.0	51.8	20000	**F603_51.8 S4 M4LB4**	448	**F603_51.8 P132 BN132MB4**	449
29.4	2779	1.8	49.0	32800	**F703_49.0 S4 M4LB4**	452	**F703_49.0 P132 BN132MB4**	453
30.0	2716	1.1	47.8	20000	**F603_47.8 S4 M4LB4**	448	**F603_47.8 P132 BN132MB4**	449
32	2566	1.9	45.2	32300	**F703_45.2 S4 M4LB4**	452	**F703_45.2 P132 BN132MB4**	453
34	2389	1.2	42.1	20000	**F603_42.1 S4 M4LB4**	448	**F603_42.1 P132 BN132MB4**	449
37	2205	1.3	38.8	20000	**F603_38.8 S4 M4LB4**	448	**F603_38.8 P132 BN132MB4**	449
45	1821	1.6	32.1	20000	**F603_32.1 S4 M4LB4**	448	**F603_32.1 P132 BN132MB4**	449
48	1742	1.0	30.0	8210	**F512_30.0 S4 M4LB4**	444	**F512_30.0 P132 BN132MB4**	445
49	1681	1.7	29.6	20000	**F603_29.6 S4 M4LB4**	448	**F603_29.6 P132 BN132MB4**	449
57	1443	1.3	25.4	20000	**F603_25.4 S4 M4LB4**	448	**F603_25.4 P132 BN132MB4**	449
59	1394	2.9	24.6	28300	**F703_24.6 S4 M4LB4**	452	**F703_24.6 P132 BN132MB4**	453
61	1380	1.2	23.8	8170	**F512_23.8 S4 M4LB4**	444	**F512_23.8 P132 BN132MB4**	445
61	1332	1.4	23.5	20000	**F603_23.5 S4 M4LB4**	448	**F603_23.5 P132 BN132MB4**	449
64	1283	3.4	22.6	27800	**F703_22.6 S4 M4LB4**	452	**F703_22.6 P132 BN132MB4**	453
69	1185	3.4	20.9	27200	**F703_20.9 S4 M4LB4**	452	**F703_20.9 P132 BN132MB4**	453
70	1173	1.6	20.7	20000	**F603_20.7 S4 M4LB4**	448	**F603_20.7 P132 BN132MB4**	449
76	1096	1.0	18.9	4920	**F412_18.9 S4 M4LB4**	440	**F412_18.9 P132 BN132MB4**	441
76	1083	1.8	19.1	20000	**F603_19.1 S4 M4LB4**	448	**F603_19.1 P132 BN132MB4**	449
77	1092	1.4	18.8	8020	**F512_18.8 S4 M4LB4**	444	**F512_18.8 P132 BN132MB4**	445
84	993	1.1	17.1	5000	**F412_17.1 S4 M4LB4**	440	**F412_17.1 P132 BN132MB4**	441
92	890	2.1	15.7	20000	**F603_15.7 S4 M4LB4**	448	**F603_15.7 P132 BN132MB4**	449
98	848	1.2	14.6	5070	**F412_14.6 S4 M4LB4**	440	**F412_14.6 P132 BN132MB4**	441
99	822	2.3	14.5	20000	**F603_14.5 S4 M4LB4**	448	**F603_14.5 P132 BN132MB4**	449
103	811	1.8	14.0	7700	**F512_14.0 S4 M4LB4**	444	**F512_14.0 P132 BN132MB4**	445
113	723	2.6	12.7	19700	**F603_12.7 S4 M4LB4**	448	**F603_12.7 P132 BN132MB4**	449
123	667	2.8	11.8	19300	**F603_11.8 S4 M4LB4**	448	**F603_11.8 P132 BN132MB4**	449
130	644	2.1	11.1	7400	**F512_11.1 S4 M4LB4**	444	**F512_11.1 P132 BN132MB4**	445
134	625	1.4	10.8	5080	**F412_10.8 S4 M4LB4**	440	**F412_10.8 P132 BN132MB4**	441
148	551	3.4	9.7	18400	**F603_9.7 S4 M4LB4**	448	**F603_9.7 P132 BN132MB4**	449
158	530	1.3	9.1	5080	**F412_9.1 S4 M4LB4**	440	**F412_9.1 P132 BN132MB4**	441
159	525	2.1	9.1	7040	**F512_9.1 S4 M4LB4**	444	**F512_9.1 P132 BN132MB4**	445
200	417	2.3	7.2	6700	**F512_7.2 S4 M4LB4**	444	**F512_7.2 P132 BN132MB4**	445
214	390	1.6	6.7	4890	**F412_6.7 S4 M4LB4**	440	**F412_6.7 P132 BN132MB4**	441

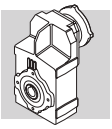

9.2 kW

n_2 min-1	M_2 Nm	S	i	R_{n2} N				
264	317	3.4	11.1	6340	**F512_11.1 S4 M4LA2**	444	**F512_11.1 P132 BN132M2**	445
272	307	2.4	10.8	4680	**F412_10.8 S4 M4LA2**	440	**F412_10.8 P132 BN132M2**	441
321	260	2.3	9.1	4560	**F412_9.1 S4 M4LA2**	440	**F412_9.1 P132 BN132M2**	441
324	258	3.5	9.1	5980	**F512_9.1 S4 M4LA2**	444	**F512_9.1 P132 BN132M2**	445
436	192	2.7	6.7	4270	**F412_6.7 S4 M4LA2**	440	**F412_6.7 P132 BN132M2**	441

11 kW

n_2 min-1	M_2 Nm	S	i	R_{n2} N				
6.2	15369	0.9	231.4	55000	**F904_231.4 S4 M4LC4**	458	**F904_231.4 P160 BN160MR4**	459
6.7	14187	1.0	213.6	55000	**F904_213.6 S4 M4LC4**	458	**F904_213.6 P160 BN160MR4**	459
7.4	13179	1.1	194.2	55000	**F903_194.2 S4 M4LC4**	458	**F903_194.2 P160 BN160MR4**	459
8.0	12165	1.2	179.2	55000	**F903_179.2 S4 M4LC4**	458	**F903_179.2 P160 BN160MR4**	459
8.8	11053	1.3	162.8	55000	**F903_162.8 S4 M4LC4**	458	**F903_162.8 P160 BN160MR4**	459
9.6	10203	1.4	150.3	55000	**F903_150.3 S4 M4LC4**	458	**F903_150.3 P160 BN160MR4**	459
10.5	9323	1.5	137.3	55000	**F903_137.3 S4 M4LC4**	458	**F903_137.3 P160 BN160MR4**	459
11.4	8606	1.6	126.8	55000	**F903_126.8 S4 M4LC4**	458	**F903_126.8 P160 BN160MR4**	459
11.8	8314	1.0	122.5	45000	**F803_122.5 S4 M4LC4**	455	**F803_122.5 P160 BN160MR4**	456
12.7	7721	1.0	113.8	45000	**F803_113.8 S4 M4LC4**	455	**F803_113.8 P160 BN160MR4**	456
12.9	7599	1.8	111.9	55000	**F903_111.9 S4 M4LC4**	458	**F903_111.9 P160 BN160MR4**	459
13.9	7014	2.0	103.3	55000	**F903_103.3 S4 M4LC4**	458	**F903_103.3 P160 BN160MR4**	459
15.0	6500	2.2	95.8	55000	**F903_95.8 S4 M4LC4**	458	**F903_95.8 P160 BN160MR4**	459
15.6	6266	1.3	92.3	44100	**F803_92.3 S4 M4LC4**	455	**F803_92.3 P160 BN160MR4**	456
16.3	6000	2.3	88.4	55000	**F903_88.4 S4 M4LC4**	458	**F903_88.4 P160 BN160MR4**	459
16.9	5784	1.4	85.2	44000	**F803_85.2 S4 M4LC4**	455	**F803_85.2 P160 BN160MR4**	456
18.8	5203	2.7	76.7	55000	**F903_76.7 S4 M4LC4**	458	**F903_76.7 P160 BN160MR4**	459
18.9	5176	1.5	76.3	42800	**F803_76.3 S4 M4LC4**	455	**F803_76.3 P160 BN160MR4**	456
19.6	4993	1.0	73.6	33500	**F703_73.6 S4 M4LC4**	452	**F703_73.6 P160 BN160MR4**	453
20.4	4803	2.9	70.8	55000	**F903_70.8 S4 M4LC4**	458	**F903_70.8 P160 BN160MR4**	459
20.5	4778	1.7	70.4	42500	**F803_70.4 S4 M4LC4**	455	**F803_70.4 P160 BN160MR4**	456
21.2	4609	1.1	67.9	33100	**F703_67.9 S4 M4LC4**	452	**F703_67.9 P160 BN160MR4**	453
23.0	4243	1.2	62.5	32900	**F703_62.5 S4 M4LC4**	452	**F703_62.5 P160 BN160MR4**	453
23.2	4215	3.3	62.1	55000			**F903_62.1 P160 BN160MR4**	459
23.4	4172	1.9	61.5	41100	**F803_61.5 S4 M4LC4**	455	**F803_61.5 P160 BN160MR4**	456
25.0	3916	1.3	57.7	32500	**F703_57.7 S4 M4LC4**	452	**F703_57.7 P160 BN160MR4**	453
25.4	3851	2.1	56.7	40800	**F803_56.7 S4 M4LC4**	455	**F803_56.7 P160 BN160MR4**	456
29.3	3333	2.4	49.1	39300			**F803_49.1 P160 BN160MR4**	456
29.4	3323	1.5	49.0	31800	**F703_49.0 S4 M4LC4**	452	**F703_49.0 P160 BN160MR4**	453
32	3068	1.6	45.2	31300	**F703_45.2 S4 M4LC4**	452	**F703_45.2 P160 BN160MR4**	453
32	3077	2.6	45.3	38900			**F803_45.3 P160 BN160MR4**	456
34	2857	1.0	42.1	20000	**F603_42.1 S4 M4LC4**	448	**F603_42.1 P160 BN160MR4**	449
37	2637	1.1	38.8	20000	**F603_38.8 S4 M4LC4**	448	**F603_38.8 P160 BN160MR4**	449
38	2606	1.9	38.4	30500			**F703_38.4 P160 BN160MR4**	453
41	2406	2.1	35.4	30000			**F703_35.4 P160 BN160MR4**	453
45	2178	1.3	32.1	20000	**F603_32.1 S4 M4LC4**	448	**F603_32.1 P160 BN160MR4**	449
49	2010	1.4	29.6	20000	**F603_29.6 S4 M4LC4**	448	**F603_29.6 P160 BN160MR4**	449
52	1880	2.5	27.7	28500			**F703_27.7 P160 BN160MR4**	453
57	1725	1.1	25.4	20000	**F603_25.4 S4 M4LC4**	448	**F603_25.4 P160 BN160MR4**	449

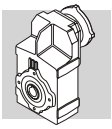

11 kW

n_2 min^{-1}	M_2 Nm	S	i	R_{n2} N				
59	1667	2.4	24.6	27800	**F703_24.6 S4 M4LC4**	452	**F703_24.6 P160 BN160MR4**	453
61	1650	1.0	23.8	7500	**F512_23.8 S4 M4LC4**	444	**F512_23.8 P160 BN160MR4**	445
61	1593	1.2	23.5	20000	**F603_23.5 S4 M4LC4**	448	**F603_23.5 P160 BN160MR4**	449
64	1534	2.8	22.6	27300	**F703_22.6 S4 M4LC4**	452	**F703_22.6 P160 BN160MR4**	453
69	1416	2.8	20.9	26800	**F703_20.9 S4 M4LC4**	452	**F703_20.9 P160 BN160MR4**	453
70	1402	1.4	20.7	20000	**F603_20.7 S4 M4LC4**	448	**F603_20.7 P160 BN160MR4**	449
76	1294	1.5	19.1	20000	**F603_19.1 S4 M4LC4**	448	**F603_19.1 P160 BN160MR4**	449
77	1305	1.2	18.8	7490	**F512_18.8 S4 M4LC4**	444	**F512_18.8 P160 BN160MR4**	445
92	1064	1.8	15.7	20000	**F603_15.7 S4 M4LC4**	448	**F603_15.7 P160 BN160MR4**	449
98	1014	1.0	14.6	4490	**F412_14.6 S4 M4LC4**	440		
99	982	1.9	14.5	20000	**F603_14.5 S4 M4LC4**	448	**F603_14.5 P160 BN160MR4**	449
103	969	1.5	14.0	7310	**F512_14.0 S4 M4LC4**	444	**F512_14.0 P160 BN160MR4**	445
113	864	2.2	12.7	19400	**F603_12.7 S4 M4LC4**	448	**F603_12.7 P160 BN160MR4**	449
123	798	2.4	11.8	19000	**F603_11.8 S4 M4LC4**	448	**F603_11.8 P160 BN160MR4**	449
130	770	1.7	11.1	7090	**F512_11.1 S4 M4LC4**	444	**F512_11.1 P160 BN160MR4**	445
134	747	1.2	10.8	4650	**F412_10.8 S4 M4LC4**	440		
148	659	2.9	9.7	18200	**F603_9.7 S4 M4LC4**	448	**F603_9.7 P160 BN160MR4**	449
158	633	1.1	9.1	4720	**F412_9.1 S4 M4LC4**	440		
159	628	1.8	9.1	6770	**F512_9.1 S4 M4LC4**	444	**F512_9.1 P160 BN160MR4**	445
161	608	3.1	9.0	17800	**F603_9.0 S4 M4LC4**	448	**F603_9.0 P160 BN160MR4**	449
200	499	2.0	7.2	6490	**F512_7.2 S4 M4LC4**	444	**F512_7.2 P160 BN160MR4**	445
214	466	1.4	6.7	4630	**F412_6.7 S4 M4LC4**	440		
263	380	2.8	11.1	6170	**F512_11.1 S4 M4LC2**	444	**F512_11.1 P160 BN160MR2**	445
271	368	2.0	10.8	4460	**F412_10.8 S4 M4LC2**	440		
320	312	2.0	9.1	4380	**F412_9.1 S4 M4LC2**	440		
323	310	2.9	9.1	5840	**F512_9.1 S4 M4LC2**	444	**F512_9.1 P160 BN160MR2**	445
406	246	3.2	7.2	5510	**F512_7.2 S4 M4LC2**	444	**F512_7.2 P160 BN160MR2**	445
434	230	2.3	6.7	4130	**F412_6.7 S4 M4LC2**	440		

15 kW

n_2 min^{-1}	M_2 Nm	S	i	R_{n2} N				
8.1	16362	0.9	179.2	55000	**F903_179.2 S5 M5SB4**	458	**F903_179.2 P160 BN160L4**	459
9.0	14866	0.9	162.8	55000	**F903_162.8 S5 M5SB4**	458	**F903_162.8 P160 BN160L4**	459
9.7	13722	1.0	150.3	55000	**F903_150.3 S5 M5SB4**	458	**F903_150.3 P160 BN160L4**	459
10.6	12539	1.1	137.3	55000	**F903_137.3 S5 M5SB4**	458	**F903_137.3 P160 BN160L4**	459
11.5	11574	1.2	126.8	55000	**F903_126.8 S5 M5SB4**	458	**F903_126.8 P160 BN160L4**	459
13.0	10220	1.4	111.9	55000	**F903_111.9 S5 M5SB4**	458	**F903_111.9 P160 BN160L4**	459
14.1	9434	1.5	103.3	55000	**F903_103.3 S5 M5SB4**	458	**F903_103.3 P160 BN160L4**	459
15.2	8743	1.6	95.8	55000	**F903_95.8 S5 M5SB4**	458	**F903_95.8 P160 BN160L4**	459
15.8	8427	0.9	92.3	41300	**F803_92.3 S5 M5SB4**	455	**F803_92.3 P160 BN160L4**	456
16.5	8070	1.7	88.4	55000	**F903_88.4 S5 M5SB4**	458	**F903_88.4 P160 BN160L4**	459
17.1	7779	1.0	85.2	40800	**F803_85.2 S5 M5SB4**	455	**F803_85.2 P160 BN160L4**	456
19.0	6998	2.0	76.7	55000	**F903_76.7 S5 M5SB4**	458	**F903_76.7 P160 BN160L4**	459
19.1	6961	1.1	76.3	40500	**F803_76.3 S5 M5SB4**	455	**F803_76.3 P160 BN160L4**	456
20.6	6460	2.2	70.8	55000	**F903_70.8 S5 M5SB4**	458	**F903_70.8 P160 BN160L4**	459
20.7	6426	1.2	70.4	39900	**F803_70.4 S5 M5SB4**	455	**F803_70.4 P160 BN160L4**	456
23.5	5669	2.5	62.1	55000			**F903_62.1 P160 BN160L4**	459

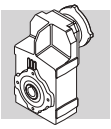

15 kW

n_2 min^{-1}	M_2 Nm	S	i	R_{n2} N				
23.8	5611	1.4	61.5	38700	**F803_61.5 S5 M5SB4**	455	**F803_61.5 P160 BN160L4**	456
25.3	5267	0.9	57.7	29700	**F703_57.7 S5 M5SB4**	452	**F703_57.7 P160 BN160L4**	453
25.5	5233	2.7	57.3	55000			**F903_57.3 P160 BN160L4**	459
25.7	5179	1.5	56.7	38600	**F803_56.7 S5 M5SB4**	455	**F803_56.7 P160 BN160L4**	456
29.7	4483	1.8	49.1	37800			**F803_49.1 P160 BN160L4**	456
29.8	4470	1.1	49.0	29400	**F703_49.0 S5 M5SB4**	452	**F703_49.0 P160 BN160L4**	453
32	4126	1.2	45.2	29100	**F703_45.2 S5 M5SB4**	452	**F703_45.2 P160 BN160L4**	453
32	4138	1.9	45.3	37200			**F803_45.3 P160 BN160L4**	456
38	3505	1.4	38.4	28600			**F703_38.4 P160 BN160L4**	453
41	3235	1.5	35.4	28200			**F703_35.4 P160 BN160L4**	453
46	2929	1.0	32.1	20000	**F603_32.1 S5 M5SB4**	448	**F603_32.1 P160 BN160L4**	449
49	2704	1.1	29.6	20000	**F603_29.6 S5 M5SB4**	448	**F603_29.6 P160 BN160L4**	449
53	2528	1.8	27.7	27100			**F703_27.7 P160 BN160L4**	453
58	2303	2.7	25.2	32900	**F803_25.2 S5 M5SB4**	455	**F803_25.2 P160 BN160L4**	456
59	2242	1.8	24.6	26500	**F703_24.6 S5 M5SB4**	452	**F703_24.6 P160 BN160L4**	453
65	2064	2.1	22.6	26200	**F703_22.6 S5 M5SB4**	452	**F703_22.6 P160 BN160L4**	453
66	2011	3.4	22.0	31900	**F803_22.0 S5 M5SB4**	455	**F803_22.0 P160 BN160L4**	456
70	1905	2.1	20.9	25700	**F703_20.9 S5 M5SB4**	452	**F703_20.9 P160 BN160L4**	453
71	1886	1.0	20.7	20000	**F603_20.7 S5 M5SB4**	448	**F603_20.7 P160 BN160L4**	449
72	1856	3.4	20.3	31300	**F803_20.3 S5 M5SB4**	455	**F803_20.3 P160 BN160L4**	456
77	1741	1.1	19.1	20000	**F603_19.1 S5 M5SB4**	448	**F603_19.1 P160 BN160L4**	449
82	1617	2.7	17.7	24900	**F703_17.7 S5 M5SB4**	452	**F703_17.7 P160 BN160L4**	453
89	1492	2.7	16.3	24400	**F703_16.3 S5 M5SB4**	452	**F703_16.3 P160 BN160L4**	453
93	1432	1.3	15.7	19600	**F603_15.7 S5 M5SB4**	448	**F603_15.7 P160 BN160L4**	449
101	1321	1.4	14.5	19200	**F603_14.5 S5 M5SB4**	448	**F603_14.5 P160 BN160L4**	449
105	1268	3.1	13.9	23600	**F703_13.9 S5 M5SB4**	452	**F703_13.9 P160 BN160L4**	453
114	1170	3.1	12.8	23100	**F703_12.8 S5 M5SB4**	452	**F703_12.8 P160 BN160L4**	453
115	1162	1.6	12.7	18800	**F603_12.7 S5 M5SB4**	448	**F603_12.7 P160 BN160L4**	449
124	1073	1.8	11.8	18400	**F603_11.8 S5 M5SB4**	448	**F603_11.8 P160 BN160L4**	449
135	991	3.5	10.9	22300	**F703_10.9 S5 M5SB4**	452	**F703_10.9 P160 BN160L4**	453
146	914	3.5	10.0	21800	**F703_10.0 S5 M5SB4**	452	**F703_10.0 P160 BN160L4**	453
150	886	2.1	9.7	17700	**F603_9.7 S5 M5SB4**	448	**F603_9.7 P160 BN160L4**	449
163	818	2.3	9.0	17300	**F603_9.0 S5 M5SB4**	448	**F603_9.0 P160 BN160L4**	449

18.5 kW

n_2 min^{-1}	M_2 Nm	S	i	R_{n2} N				
10.6	15456	0.9	137.3	55000	**F903_137.3 S5 M5LA4**	458	**F903_137.3 P180 BN180M4**	459
11.5	14267	1.0	126.8	55000	**F903_126.8 S5 M5LA4**	458	**F903_126.8 P180 BN180M4**	459
13.0	12598	1.1	111.9	55000	**F903_111.9 S5 M5LA4**	458	**F903_111.9 P180 BN180M4**	459
14.1	11629	1.2	103.3	55000	**F903_103.3 S5 M5LA4**	458	**F903_103.3 P180 BN180M4**	459
15.2	10777	1.3	95.8	55000	**F903_95.8 S5 M5LA4**	458	**F903_95.8 P180 BN180M4**	459
16.5	9948	1.4	88.4	55000	**F903_88.4 S5 M5LA4**	458	**F903_88.4 P180 BN180M4**	459
19.0	8626	1.6	76.7	55000	**F903_76.7 S5 M5LA4**	458	**F903_76.7 P180 BN180M4**	459
19.1	8581	0.9	76.3	38100	**F803_76.3 S5 M5LA4**	455	**F803_76.3 P180 BN180M4**	456
20.6	7963	1.8	70.8	55000	**F903_70.8 S5 M5LA4**	458	**F903_70.8 P180 BN180M4**	459
20.7	7921	1.0	70.4	37600	**F803_70.4 S5 M5LA4**	455	**F803_70.4 P180 BN180M4**	456
23.5	6989	2.0	62.1	55000			**F903_62.1 P180 BN180M4**	459

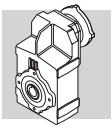

18.5 kW

n_2 min^{-1}	M_2 Nm	S	i	R_{n2} N				
23.8	6916	1.1	61.5	37400	**F803_61.5 S5 M5LA4**	455	**F803_61.5 P180 BN180M4**	456
25.5	6451	2.2	57.3	55000			**F903_57.3 P180 BN180M4**	459
25.7	6384	1.3	56.7	36800	**F803_56.7 S5 M5LA4**	455	**F803_56.7 P180 BN180M4**	456
29.3	5615	2.5	49.9	55000			**F903_49.9 P180 BN180M4**	459
29.7	5526	1.4	49.1	35800			**F803_49.1 P180 BN180M4**	456
29.8	5510	0.9	49.0	27400	**F703_49.0 S5 M5LA4**	452	**F703_49.0 P180 BN180M4**	453
32	5183	2.7	46.1	55000			**F903_46.1 P180 BN180M4**	459
32	5101	1.6	45.3	35700			**F803_45.3 P180 BN180M4**	456
32	5086	1.0	45.2	27200	**F703_45.2 S5 M5LA4**	452	**F703_45.2 P180 BN180M4**	453
36	4558	3.1	40.5	53700			**F903_40.5 P180 BN180M4**	459
37	4389	1.8	39.0	35000			**F803_39.0 P180 BN180M4**	456
38	4321	1.2	38.4	27000			**F703_38.4 P180 BN180M4**	453
39	4207	3.2	37.4	52700			**F903_37.4 P180 BN180M4**	459
41	4051	2.0	36.0	34400			**F803_36.0 P180 BN180M4**	456
41	3988	1.3	35.4	26700			**F703_35.4 P180 BN180M4**	453
47	3517	2.3	31.3	33600			**F803_31.3 P180 BN180M4**	456
49	3376	1.5	30.0	26300			**F703_30.0 P180 BN180M4**	453
51	3246	2.5	28.8	33000			**F803_28.8 P180 BN180M4**	456
53	3116	1.5	27.7	26000			**F703_27.7 P180 BN180M4**	453
58	2839	2.2	25.2	32100	**F803_25.2 S5 M5LA4**	455	**F803_25.2 P180 BN180M4**	456
59	2764	1.4	24.6	25500	**F703_24.6 S5 M5LA4**	452	**F703_24.6 P180 BN180M4**	453
65	2544	1.7	22.6	25200	**F703_22.6 S5 M5LA4**	452	**F703_22.6 P180 BN180M4**	453
66	2479	2.7	22.0	31300	**F803_22.0 S5 M5LA4**	455	**F803_22.0 P180 BN180M4**	456
70	2348	1.7	20.9	24900	**F703_20.9 S5 M5LA4**	452	**F703_20.9 P180 BN180M4**	453
72	2288	2.7	20.3	30600	**F803_20.3 S5 M5LA4**	455	**F803_20.3 P180 BN180M4**	456
82	1993	2.2	17.7	24200	**F703_17.7 S5 M5LA4**	452	**F703_17.7 P180 BN180M4**	453
83	1981	3.4	17.6	29700	**F803_17.6 S5 M5LA4**	455	**F803_17.6 P180 BN180M4**	456
89	1839	2.2	16.3	23800	**F703_16.3 S5 M5LA4**	452	**F703_16.3 P180 BN180M4**	453
90	1828	3.4	16.2	29100	**F803_16.2 S5 M5LA4**	455	**F803_16.2 P180 BN180M4**	456
93	1765	1.1	15.7	18700	**F603_15.7 S5 M5LA4**	448	**F603_15.7 P180 BN180M4**	449
101	1629	1.2	14.5	18600	**F603_14.5 S5 M5LA4**	448	**F603_14.5 P180 BN180M4**	449
105	1563	2.5	13.9	23000	**F703_13.9 S5 M5LA4**	452	**F703_13.9 P180 BN180M4**	453
114	1442	2.5	12.8	22600	**F703_12.8 S5 M5LA4**	452	**F703_12.8 P180 BN180M4**	453
115	1433	1.3	12.7	18300	**F603_12.7 S5 M5LA4**	448	**F603_12.7 P180 BN180M4**	449
124	1323	1.4	11.8	17900	**F603_11.8 S5 M5LA4**	448	**F603_11.8 P180 BN180M4**	449
135	1221	2.8	10.9	21800	**F703_10.9 S5 M5LA4**	452	**F703_10.9 P180 BN180M4**	453
146	1127	2.8	10.0	21400	**F703_10.0 S5 M5LA4**	452	**F703_10.0 P180 BN180M4**	453
150	1092	1.7	9.7	17300	**F603_9.7 S5 M5LA4**	448	**F603_9.7 P180 BN180M4**	449
163	1008	1.9	9.0	16900	**F603_9.0 S5 M5LA4**	448	**F603_9.0 P180 BN180M4**	449

22 kW

n_2 min^{-1}	M_2 Nm	S	i	R_{n2} N				
13.1	14880	0.9	111.9	55000			**F903_111.9 P180 BN180L4**	459
14.2	13735	1.0	103.3	55000			**F903_103.3 P180 BN180L4**	459
15.4	12728	1.1	95.8	55000			**F903_95.8 P180 BN180L4**	459
16.6	11749	1.2	88.4	55000			**F903_88.4 P180 BN180L4**	459
19.2	10188	1.4	76.7	55000			**F903_76.7 P180 BN180L4**	459

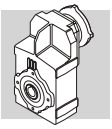

22 kW

n_2 min-1	M_2 Nm	S	i	R_{n2} N				
20.8	9405	1.5	70.8	55000			**F903_70.8 P180 BN180L4**	459
23.7	8254	1.7	62.1	55000			**F903_62.1 P180 BN180L4**	459
23.9	8169	1.0	61.5	35400			**F803_61.5 P180 BN180L4**	456
25.6	7619	1.8	57.3	55000			**F903_57.3 P180 BN180L4**	459
25.9	7541	1.1	56.7	35000			**F803_56.7 P180 BN180L4**	456
29.5	6632	2.1	49.9	54400			**F903_49.9 P180 BN180L4**	459
29.9	6527	1.2	49.1	34100			**F803_49.1 P180 BN180L4**	456
32	6122	2.3	46.1	53500			**F903_46.1 P180 BN180L4**	459
32	6025	1.3	45.3	34300			**F803_45.3 P180 BN180L4**	456
36	5383	2.6	40.5	52300			**F903_40.5 P180 BN180L4**	459
38	5184	1.5	39.0	33300			**F803_39.0 P180 BN180L4**	456
38	5103	1	38.4	25400			**F703_38.4 P180 BN180L4**	453
39	4969	2.7	37.4	51400			**F903_37.4 P180 BN180L4**	459
41	4785	1.7	36.0	33200			**F803_36.0 P180 BN180L4**	456
41	4711	1.1	35.4	25300			**F703_35.4 P180 BN180L4**	453
47	4154	1.9	31.3	32600			**F803_31.3 P180 BN180L4**	456
47	4120	3.2	31.0	49500			**F903_31.0 P180 BN180L4**	459
49	3988	1.3	30.0	25100			**F703_30.0 P180 BN180L4**	453
51	3834	2.1	28.8	32000			**F803_28.8 P180 BN180L4**	456
51	3803	3.2	28.6	48600			**F903_28.6 P180 BN180L4**	459
53	3681	1.3	27.7	24800			**F703_27.7 P180 BN180L4**	453
58	3353	1.9	25.2	31300			**F803_25.2 P180 BN180L4**	456
60	3264	1.2	24.6	24500			**F703_24.6 P180 BN180L4**	453
65	3005	1.4	22.6	24300			**F703_22.6 P180 BN180L4**	453
67	2928	2.3	22	30200			**F803_22.0 P180 BN180L4**	456
70	2773	1.4	20.9	24000			**F703_20.9 P180 BN180L4**	453
72	2703	2.3	20.3	29900			**F803_20.3 P180 BN180L4**	456
83	2354	1.8	17.7	23400			**F703_17.7 P180 BN180L4**	453
84	2339	2.9	17.6	29100			**F803_17.6 P180 BN180L4**	456
90	2173	1.8	16.3	23100			**F703_16.3 P180 BN180L4**	453
90	2159	2.9	16.2	28500			**F803_16.2 P180 BN180L4**	456
106	1846	2.1	13.9	22400			**F703_13.9 P180 BN180L4**	453
115	1704	2.1	12.8	22100			**F703_12.8 P180 BN180L4**	453
115	1692	1.1	12.7	17700			**F603_12.7 P180 BN180L4**	449
125	1562	1.2	11.8	17400			**F603_11.8 P180 BN180L4**	449
135	1442	2.4	10.9	21400			**F703_10.9 P180 BN180L4**	453
147	1331	2.4	10.0	21000			**F703_10.0 P180 BN180L4**	453
151	1290	1.5	9.7	16900			**F603_9.7 P180 BN180L4**	449
164	1191	1.6	9.0	16500			**F603_9.0 P180 BN180L4**	449

30 kW

n_2 min-1	M_2 Nm	S	i	R_{n2} N				
16.6	16022	0.9	88.4	52200			**F903_88.4 P200 BN200L4**	459
19.2	13893	1.0	76.7	52400			**F903_76.7 P200 BN200L4**	459
20.8	12825	1.1	70.8	52100			**F903_70.8 P200 BN200L4**	459
23.7	11256	1.2	62.1	51800			**F903_62.1 P200 BN200L4**	459

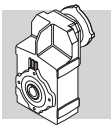

30 kW

n_2 min^{-1}	M_2 Nm	S	i	R_{n2} N				
25.6	10390	1.3	57.3	51400			**F903_57.3 P200 BN200L4**	459
29.5	9044	1.5	49.9	50800			**F903_49.9 P200 BN200L4**	459
32	8348	1.7	46.1	50200			**F903_46.1 P200 BN200L4**	459
32	8216	1.0	45.3	30900			**F803_45.3 P200 BN200L4**	456
36	7341	1.9	40.5	49400			**F903_40.5 P200 BN200L4**	459
38	7069	1.1	39.0	31000			**F803_39.0 P200 BN200L4**	456
39	6776	2.0	37.4	48700			**F903_37.4 P200 BN200L4**	459
41	6525	1.2	36.0	30600			**F803_36.0 P200 BN200L4**	456
47	5664	1.4	31.3	29900			**F803_31.3 P200 BN200L4**	456
47	5618	2.3	31.0	47300			**F903_31.0 P200 BN200L4**	459
49	5438	0.9	30.0	22300			**F703_30.0 P200 BN200L4**	453
51	5229	1.5	28.8	29500			**F803_28.8 P200 BN200L4**	456
51	5186	2.3	28.6	46600			**F903_28.6 P200 BN200L4**	459
53	5019	0.9	27.7	22200			**F703_27.7 P200 BN200L4**	453
58	4601	2.6	25.4	45500			**F903_25.4 P200 BN200L4**	459
58	4572	1.2	25.2	29500			**F803_25.2 P200 BN200L4**	456
66	4039	3.0	22.3	44400			**F903_22.3 P200 BN200L4**	459
67	3992	1.7	22.0	29000			**F803_22.0 P200 BN200L4**	456
71	3728	3.0	20.6	43600			**F903_20.6 P200 BN200L4**	459
72	3685	1.7	20.3	28500			**F803_20.3 P200 BN200L4**	456
83	3209	1.4	17.7	21800			**F703_17.7 P200 BN200L4**	453
84	3190	2.1	17.6	27900			**F803_17.6 P200 BN200L4**	456
90	2963	1.4	16.3	21500			**F703_16.3 P200 BN200L4**	453
90	2945	2.1	16.2	27400			**F803_16.2 P200 BN200L4**	456
105	2534	2.7	14.0	26700			**F803_14.0 P200 BN200L4**	456
106	2517	1.5	13.9	21100			**F703_13.9 P200 BN200L4**	453
114	2339	2.7	12.9	26200			**F803_12.9 P200 BN200L4**	456
115	2323	1.5	12.8	20900			**F703_12.8 P200 BN200L4**	453
135	1967	1.8	10.9	20300			**F703_10.9 P200 BN200L4**	453
142	1874	3.0	10.3	24900			**F803_10.3 P200 BN200L4**	456
147	1815	1.8	10.0	20000			**F703_10.0 P200 BN200L4**	453

37 kW

n_2 min^{-1}	M_2 Nm	S	i	R_{n2} N				
20.9	15710	0.9	70.8	47600			**F903_70.8 P225 BN225S4**	459
25.8	12728	1.1	57.3	47700			**F903_57.3 P225 BN225S4**	459
29.7	11079	1.3	49.9	47600			**F903_49.9 P225 BN225S4**	459
32	10227	1.4	46.1	47200			**F903_46.1 P225 BN225S4**	459
37	8993	1.6	40.5	46800			**F903_40.5 P225 BN225S4**	459
38	8659	0.9	39.0	28500			**F803_39.0 P225 BN225S4**	456
40	8301	1.6	37.4	46300			**F903_37.4 P225 BN225S4**	459
41	7993	1.0	36.0	28300			**F803_36.0 P225 BN225S4**	456
47	6939	1.2	31.3	28400			**F803_31.3 P225 BN225S4**	456
48	6882	1.9	31.0	45300			**F903_31.0 P225 BN225S4**	459
51	6405	1.2	28.8	28100			**F803_28.8 P225 BN225S4**	456
52	6353	1.9	28.6	44700			**F903_28.6 P225 BN225S4**	459
58	5637	2.1	25.4	43900			**F903_25.4 P225 BN225S4**	459

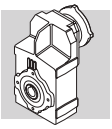

37 kW

n_2 min^{-1}	M_2 Nm	S	i	R_{n2} N				
59	5601	1.1	25.2	27800			**F803_25.2 P225 BN225S4**	456
66	4947	2.4	22.3	43000			**F903_22.3 P225 BN225S4**	459
67	4891	1.1	22.0	27600			**F803_22.0 P225 BN225S4**	456
72	4567	2.5	20.6	42300			**F903_20.6 P225 BN225S4**	459
73	4515	1.1	20.3	27200			**F803_20.3 P225 BN225S4**	456
83	3975	2.8	17.9	41200			**F903_17.9 P225 BN225S4**	459
84	3908	1.7	17.6	26800			**F803_17.6 P225 BN225S4**	456
90	3669	2.8	16.5	40500			**F903_16.5 P225 BN225S4**	459
91	3607	1.7	16.2	26300			**F803_16.2 P225 BN225S4**	456
102	3226	3.1	14.5	39500			**F903_14.5 P225 BN225S4**	459
106	3104	2.2	14.0	25800			**F803_14.0 P225 BN225S4**	456
110	2978	3.1	13.4	38700			**F903_13.4 P225 BN225S4**	459
115	2865	2.2	12.9	25300			**F803_12.9 P225 BN225S4**	456
132	2487	2.4	11.2	24500			**F803_11.2 P225 BN225S4**	456
143	2296	2.4	10.3	24300			**F803_10.3 P225 BN225S4**	456

45 kW

n_2 min^{-1}	M_2 Nm	S	i	R_{n2} N				
32	12438	1.1	46.1	43900			**F903_46.1 P225 BN225M4**	459
37	10937	1.3	40.5	43900			**F903_40.5 P225 BN225M4**	459
40	10096	1.3	37.4	43600			**F903_37.4 P225 BN225M4**	459
47	8439	0.9	31.3	26100			**F803_31.3 P225 BN225M4**	456
48	8370	1.6	31.0	43100			**F903_31.0 P225 BN225M4**	459
51	7790	1.0	28.8	26000			**F803_28.8 P225 BN225M4**	456
52	7726	1.6	28.6	42600			**F903_28.6 P225 BN225M4**	459
58	6855	1.8	25.4	42000			**F903_25.4 P225 BN225M4**	459
66	6017	2.0	22.3	41400			**F903_22.3 P225 BN225M4**	459
67	5948	1.1	22.0	26000			**F803_22.0 P225 BN225M4**	456
72	5554	2.0	20.6	40800			**F903_20.6 P225 BN225M4**	459
73	5491	1.1	20.3	25700			**F803_20.3 P225 BN225M4**	456
83	4834	2.3	17.9	39900			**F903_17.9 P225 BN225M4**	459
84	4753	1.4	17.6	25500			**F803_17.6 P225 BN225M4**	456
90	4463	2.3	16.5	39300			**F903_16.5 P225 BN225M4**	459
91	4387	1.4	16.2	25200			**F803_16.2 P225 BN225M4**	456
102	3924	2.5	14.5	38400			**F903_14.5 P225 BN225M4**	459
106	3775	1.8	14.0	24800			**F803_14.0 P225 BN225M4**	456
110	3622	2.6	13.4	37800			**F903_13.4 P225 BN225M4**	459
115	3484	1.8	12.9	24100			**F803_12.9 P225 BN225M4**	456
132	3025	1.5	11.2	24000			**F803_11.2 P225 BN225M4**	456
133	3003	2.9	11.1	36400			**F903_11.1 P225 BN225M4**	459
143	2792	2.0	10.3	23500			**F803_10.3 P225 BN225M4**	456

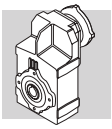

55 kW

n_2 min^{-1}	M_2 Nm	S	i	R_{n2} N				
32	15202	0.9	46.1	39700			**F903_46.1 P250 BN250M4**	459
37	13367	1.0	40.5	40300			**F903_40.5 P250 BN250M4**	459
40	12339	1.1	37.4	40200			**F903_37.4 P250 BN250M4**	459
48	10230	1.3	31.0	40300			**F903_31.0 P250 BN250M4**	459
52	9443	1.3	28.6	40100			**F903_28.6 P250 BN250M4**	459
58	8379	1.4	25.4	39700			**F903_25.4 P250 BN250M4**	459
66	7354	1.6	22.3	39400			**F903_22.3 P250 BN250M4**	459
72	6788	1.7	20.6	38900			**F903_20.6 P250 BN250M4**	459
83	5909	1.9	17.9	38300			**F903_17.9 P250 BN250M4**	459
90	5454	1.9	16.5	37800			**F903_16.5 P250 BN250M4**	459
102	4796	2.1	14.5	37100			**F903_14.5 P250 BN250M4**	459
110	4427	2.1	13.4	36600			**F903_13.4 P250 BN250M4**	459
133	3671	2.4	11.1	35400			**F903_11.1 P250 BN250M4**	459
144	3388	2.4	10.3	34800			**F903_10.3 P250 BN250M4**	459

F 10 — 140 Nm

	i	n_1 = 2800 min^{-1}					n_1 = 1400 min^{-1}					
		n_2 min^{-1}	M_{n2} Nm	P_{n1} kW	R_{n1} N	R_{n2} N	n_2 min^{-1}	M_{n2} Nm	P_{n1} kW	R_{n1} N	R_{n2} N	
F 10 2_7.4	7.4	378	63	2.6	1000	1290	189	76	1.6	1290	1640	
F 10 2_8.6	8.6	326	67	2.4	980	1350	163	82	1.5	1260	1710	
F 10 2_9.8	9.8	287	73	2.3	980	1410	143	89	1.4	1250	1780	
F 10 2_11.5	11.5	243	78	2.1	950	1480	121	96	1.3	1220	1870	
F 10 2_13.0	13.0	215	85	2.0	940	1530	107	104	1.2	1210	1940	
F 10 2_14.6	14.6	191	94	2.0	1120	1590	96	119	1.3	1300	2000	
F 10 2_17.0	17.0	165	104	1.9	1090	1650	82	128	1.2	1300	2090	
F 10 2_19.3	19.3	145	108	1.7	1100	1730	72	136	1.1	1300	2180	
F 10 2_22.8	22.8	123	119	1.6	1080	1810	61	140	0.95	1300	2310	
F 10 2_25.8	25.8	109	123	1.5	1090	1890	54	140	0.84	1300	2430	
F 10 2_29.6	29.6	94	132	1.4	1060	1970	47	140	0.73	1300	2560	
F 10 2_33.0	33.0	85	137	1.3	1070	2040	42	140	0.65	1300	2670	417
F 10 2_35.3	35.3	79	140	1.2	1060	2090	40	140	0.61	1300	2740	
F 10 2_39.6	39.6	71	140	1.1	1080	2190	35	140	0.54	1300	2800	
F 10 2_44.7	44.7	63	140	0.97	1080	2290	31	140	0.48	1300	2800	
F 10 2_48.7	48.7	57	140	0.89	1090	2370	28.7	140	0.44	1300	2800	
F 10 2_56.7	56.7	49	140	0.76	1100	2520	24.7	140	0.38	1300	2800	
F 10 2_63.0	63.0	44	140	0.69	1110	2620	22.2	140	0.34	1300	2800	
F 10 2_71.1	71.1	39	140	0.61	1000	2750	19.7	140	0.30	1300	2800	
F 10 2_81.3	81.3	34	140	0.53	1110	2800	17.2	140	0.27	1300	2800	
F 10 2_91.5	91.5	31	140	0.47	1110	2800	15.3	140	0.24	1300	2800	
F 10 2_106.0	106.0	26.4	140	0.41	1120	2800	13.2	140	0.20	1300	2800	
F 10 2_127.1	127.1	22.0	140	0.34	1130	2800	11.0	140	0.17	1300	2800	

Bonfiglioli Riduttori

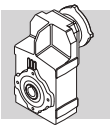

F 10 — 140 Nm

	i	n_1 = 900 min^{-1}					n_1 = 500 min^{-1}					
		n_2 min^{-1}	M_{n2} Nm	P_{n1} kW	R_{n1} N	R_{n2} N	n_2 min^{-1}	M_{n2} Nm	P_{n1} kW	R_{n1} N	R_{n2} N	
F 10 2_7.4	7.4	122	91	1.2	1300	1890	68	111	0.83	1300	2300	
F 10 2_8.6	8.6	105	94	1.1	1300	1970	58	112	0.72	1300	2430	
F 10 2_9.8	9.8	92	107	1.1	1300	2050	51	130	0.73	1300	2490	
F 10 2_11.5	11.5	78	110	0.95	1300	2180	43	131	0.63	1300	2660	
F 10 2_13.0	13.0	69	124	0.94	1300	2240	38	140	0.59	1300	2800	
F 10 2_14.6	14.6	61	138	0.93	1300	2320	34	140	0.53	1300	2800	
F 10 2_17.0	17.0	53	140	0.82	1300	2450	29.5	140	0.46	1300	2800	
F 10 2_19.3	19.3	47	140	0.72	1300	2580	25.9	140	0.40	1300	2800	
F 10 2_22.8	22.8	39	140	0.61	1300	2750	21.9	140	0.34	1300	2800	
F 10 2_25.8	25.8	35	140	0.54	1300	2800	19.4	140	0.30	1300	2800	
F 10 2_29.6	29.6	30	140	0.47	1300	2800	16.9	140	0.26	1300	2800	
F 10 2_33.0	33.0	27.3	140	0.42	1300	2800	15.2	140	0.23	1300	2800	417
F 10 2_35.3	35.3	25.5	140	0.39	1300	2800	14.1	140	0.22	1300	2800	
F 10 2_39.6	39.6	22.7	140	0.35	1300	2800	12.6	140	0.19	1300	2800	
F 10 2_44.7	44.7	20.1	140	0.31	1300	2800	11.2	140	0.17	1300	2800	
F 10 2_48.7	48.7	18.5	140	0.29	1300	2800	10.3	140	0.16	1300	2800	
F 10 2_56.7	56.7	15.9	140	0.24	1300	2800	8.8	140	0.14	1300	2800	
F 10 2_63.0	63.0	14.3	140	0.22	1300	2800	7.9	140	0.12	1300	2800	
F 10 2_71.1	71.1	12.7	140	0.20	1300	2800	7.0	140	0.11	1300	2800	
F 10 2_81.3	81.3	11.1	140	0.17	1300	2800	6.1	140	0.09	1300	2800	
F 10 2_91.5	91.5	9.8	140	0.15	1300	2800	5.5	140	0.08	1300	2800	
F 10 2_106.0	106.0	8.5	140	0.13	1300	2800	4.7	140	0.07	1300	2800	
F 10 2_127.1	127.1	7.1	140	0.11	1300	2800	3.9	140	0.06	1300	2800	

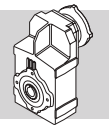

F 20 — 250 Nm

	i	n_1 = 2800 min^{-1}					n_1 = 1400 min^{-1}					
		n_2 min^{-1}	M_{n2} Nm	P_{n1} kW	R_{n1} N	R_{n2} N	n_2 min^{-1}	M_{n2} Nm	P_{n1} kW	R_{n1} N	R_{n2} N	
F 20 2_6.4	6.4	437	103	5.0	—	1370	218	130	3.1	—	1720	
F 20 2_7.8	7.8	357	115	4.5	—	1440	179	144	2.8	—	1820	
F 20 2_8.7	8.7	321	123	4.3	—	1490	160	155	2.7	—	1870	
F 20 2_10.0	10.0	279	131	4.0	—	1550	140	165	2.5	—	1950	
F 20 2_11.2	11.2	249	141	3.9	—	1590	125	177	2.4	—	2010	
F 20 2_14.8	14.8	189	166	3.5	760	1740	95	203	2.1	1010	2210	
F 20 2_18.1	18.1	155	175	3.0	750	1870	77	213	1.8	1020	2380	
F 20 2_20.2	20.2	139	182	2.8	810	1940	69	223	1.7	1070	2460	
F 20 2_23.1	23.1	121	190	2.5	770	2030	60	235	1.6	1000	2570	
F 20 2_25.9	25.9	108	196	2.3	830	2110	54	240	1.4	1100	2680	
F 20 2_30.4	30.4	92	205	2.1	780	2230	46	250	1.3	1050	2840	
F 20 2_33.1	33.1	85	210	2.0	800	2300	42	250	1.2	1120	2940	
F 20 2_37.9	37.9	74	220	1.8	740	2400	37	250	1.0	1130	3110	
F 20 2_41.8	41.8	67	225	1.7	780	2490	33	250	0.92	1220	3240	
F 20 2_44.8	44.8	62	235	1.6	690	2540	31	250	0.86	1200	3330	
F 20 2_50.7	50.7	55	238	1.4	780	2660	27.6	250	0.76	1320	3500	
F 20 2_56.7	56.7	49	250	1.4	730	2750	24.7	250	0.68	1360	3660	
F 20 2_61.9	61.9	45	250	1.2	750	2860	22.6	250	0.62	1370	3790	
F 20 2_69.1	69.1	40	250	1.1	760	2990	20.2	250	0.56	1370	3950	421
F 20 2_76.8	76.8	36	250	1.0	780	3130	18.2	250	0.50	1380	4000	
F 20 2_90.4	90.4	31	250	0.85	830	3340	15.5	250	0.43	1390	4000	
F 20 2_101.6	101.6	27.5	250	0.76	830	3500	13.8	250	0.38	1390	4000	
F 20 2_114.3	114.3	24.5	250	0.67	850	3670	12.2	250	0.34	1400	4000	
F 20 2_132.2	132.2	21.2	250	0.58	870	3890	10.6	250	0.29	1400	4000	
F 20 3_156.3	156.3	17.9	250	0.50	1170	4000	9.0	250	0.25	1300	4000	
F 20 3_172.6	172.6	16.2	250	0.46	1200	4000	8.1	250	0.23	1300	4000	
F 20 3_184.9	184.9	15.1	250	0.43	1210	4000	7.6	250	0.21	1300	4000	
F 20 3_209.3	209.3	13.4	250	0.38	1240	4000	6.7	250	0.19	1300	4000	
F 20 3_234.0	234.0	12.0	250	0.34	1270	4000	6.0	250	0.17	1300	4000	
F 20 3_255.3	255.3	11.0	250	0.31	1280	4000	5.5	250	0.15	1300	4000	
F 20 3_285.2	285.2	9.8	250	0.28	1300	4000	4.9	250	0.14	1300	4000	
F 20 3_316.9	316.9	8.8	250	0.25	1300	4000	4.4	250	0.12	1300	4000	
F 20 3_372.9	372.9	7.5	250	0.21	1300	4000	3.8	250	0.11	1300	4000	
F 20 3_419.3	419.3	6.7	250	0.19	1300	4000	3.3	250	0.09	1300	4000	
F 20 3_471.7	471.7	5.9	250	0.17	1300	4000	3.0	250	0.08	1300	4000	
F 20 3_545.3	545.3	5.1	250	0.14	1300	4000	2.6	250	0.07	1300	4000	

(—) Contact our technical service department advising radial load data (rotation direction, orientation, position)

Bonfiglioli Riduttori

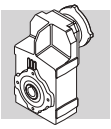

F 20 250 Nm

	i	n_1 = 900 min^{-1}					n_1 = 500 min^{-1}					
		n_2 min^{-1}	M_{n2} Nm	P_{n1} kW	R_{n1} N	R_{n2} N	n_2 min^{-1}	M_{n2} Nm	P_{n1} kW	R_{n1} N	R_{n2} N	
F 20 2_6.4	6.4	140	150	2.3	—	1990	218	183	4.4	—	2420	
F 20 2_7.8	7.8	115	167	2.1	—	2110	64	189	1.3	—	2610	
F 20 2_8.7	8.7	103	180	2.0	—	2170	57	219	1.4	—	2640	
F 20 2_10.0	10.0	90	191	1.9	—	2260	50	221	1.2	—	2790	
F 20 2_11.2	11.2	80	205	1.8	—	2330	45	250	1.2	—	2830	
F 20 2_14.8	14.8	61	232	1.6	1210	2570	34	250	0.93	1790	3230	
F 20 2_18.1	18.1	50	250	1.4	1150	2740	27.7	250	0.76	1910	3500	
F 20 2_20.2	20.2	45	250	1.2	1320	2870	24.8	250	0.68	1960	3650	
F 20 2_23.1	23.1	39	250	1.1	1350	3040	21.6	250	0.60	1970	3860	
F 20 2_25.9	25.9	35	250	0.96	1500	3190	19.3	250	0.53	2010	4000	
F 20 2_30.4	30.4	29.6	250	0.82	1530	3400	16.5	250	0.45	2020	4000	
F 20 2_33.1	33.1	27.2	250	0.75	1580	3520	15.1	250	0.42	2040	4000	
F 20 2_37.9	37.9	23.8	250	0.65	1590	3720	13.2	250	0.36	2040	4000	
F 20 2_41.8	41.8	21.5	250	0.59	1610	3870	12.0	250	0.33	2070	4000	
F 20 2_44.8	44.8	20.1	250	0.55	1610	3970	11.2	250	0.31	2060	4000	
F 20 2_50.7	50.7	17.7	250	0.49	1640	4000	9.9	250	0.27	2090	4000	
F 20 2_56.7	56.7	15.9	250	0.44	1650	4000	8.8	250	0.24	2110	4000	
F 20 2_61.9	61.9	14.5	250	0.40	1660	4000	8.1	250	0.22	2110	4000	
F 20 2_69.1	69.1	13.0	250	0.36	1660	4000	7.2	250	0.20	2110	4000	421
F 20 2_76.8	76.8	11.7	250	0.32	1670	4000	6.5	250	0.18	2120	4000	
F 20 2_90.4	90.4	10.0	250	0.27	1680	4000	5.5	250	0.15	2130	4000	
F 20 2_101.6	101.6	8.9	250	0.24	1680	4000	4.9	250	0.14	2130	4000	
F 20 2_114.3	114.3	7.9	250	0.22	1690	4000	4.4	250	0.12	2140	4000	
F 20 2_132.2	132.2	6.8	250	0.19	1690	4000	3.8	250	0.10	2150	4000	
F 20 3_156.3	156.3	5.8	250	0.16	1300	4000	3.2	250	0.09	1300	4000	
F 20 3_172.6	172.6	5.2	250	0.15	1300	4000	2.9	250	0.08	1300	4000	
F 20 3_184.9	184.9	4.9	250	0.14	1300	4000	2.7	250	0.08	1300	4000	
F 20 3_209.3	209.3	4.3	250	0.12	1300	4000	2.4	250	0.07	1300	4000	
F 20 3_234.0	234.0	3.8	250	0.11	1300	4000	2.1	250	0.06	1300	4000	
F 20 3_255.3	255.3	3.5	250	0.10	1300	4000	2.0	250	0.06	1300	4000	
F 20 3_285.2	285.2	3.2	250	0.09	1300	4000	1.8	250	0.05	1300	4000	
F 20 3_316.9	316.9	2.8	250	0.08	1300	4000	1.6	250	0.04	1300	4000	
F 20 3_372.9	372.9	2.4	250	0.07	1300	4000	1.3	250	0.04	1300	4000	
F 20 3_419.3	419.3	2.1	250	0.06	1300	4000	1.2	250	0.03	1300	4000	
F 20 3_471.7	471.7	1.9	250	0.05	1300	4000	1.1	250	0.03	1300	4000	
F 20 3_545.3	545.3	1.7	250	0.05	1300	4000	0.92	250	0.03	1300	4000	

(—) Contact our technical service department advising radial load data (rotation direction, orientation, position)

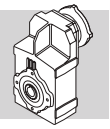

F 25 — 400 Nm

	i	n_1 = 2800 min^{-1}					n_1 = 1400 min^{-1}					
		n_2 min^{-1}	M_{n2} Nm	P_{n1} kW	R_{n1} N	R_{n2} N	n_2 min^{-1}	M_{n2} Nm	P_{n1} kW	R_{n1} N	R_{n2} N	
F 25 2_6.9	6.9	408	155	7.0	—	1840	204	195	4.4	—	2320	
F 25 2_8.4	8.4	334	170	6.3	—	1950	167	215	4.0	—	2450	
F 25 2_9.4	9.4	299	180	5.9	—	2010	150	225	3.7	—	2540	
F 25 2_10.6	10.6	264	240	7.0	—	1850	132	305	4.4	—	2320	
F 25 2_13.0	13.0	216	255	6.1	—	1990	108	320	3.8	—	2510	
F 25 2_14.5	14.5	194	260	5.5	—	2080	97	330	3.5	—	2610	
F 25 2_16.6	16.6	168	270	5.0	—	2190	84	340	3.2	—	2760	
F 25 2_18.6	18.6	150	280	4.6	—	2270	75	350	2.9	—	2870	
F 25 2_21.8	21.8	128	280	4.0	—	2460	64	355	2.5	250	3090	
F 25 2_23.8	23.8	118	285	3.7	250	2540	59	360	2.3	300	3200	
F 25 2_27.2	27.2	103	290	3.3	250	2690	51	365	2.1	320	3400	
F 25 2_30.0	30.0	93	295	3.0	310	2800	47	370	1.9	410	3540	
F 25 2_32.2	32.2	87	295	2.8	310	2900	44	370	1.8	410	3660	
F 25 2_36.4	36.4	77	295	2.5	460	3070	38	370	1.6	600	3880	
F 25 2_40.7	40.7	69	295	2.2	560	3230	34	370	1.4	720	4080	
F 25 2_44.4	44.4	63	295	2.0	720	3360	32	370	1.3	720	4250	
F 25 3_45.6	45.6	61	340	2.4	1440	3100	31	400	1.4	1830	4030	
F 25 3_50.8	50.8	55	350	2.2	1450	3230	27.6	400	1.2	1850	4250	
F 25 3_58.3	58.3	48	365	2.0	1450	3390	24.0	400	1.1	1860	4530	
F 25 3_65.3	65.3	43	375	1.8	1450	3530	21.4	400	0.97	1870	4780	
F 25 3_76.6	76.6	37	395	1.6	1450	3730	18.3	400	0.82	1880	5140	
F 25 3_83.4	83.4	34	400	1.5	1450	3860	16.8	400	0.76	1880	5330	
F 25 3_95.5	95.5	29.3	400	1.3	1460	4130	14.7	400	0.66	1890	5660	
F 25 3_105.4	105.4	26.6	400	1.2	1470	4320	13.3	400	0.60	1890	5910	425
F 25 3_113.0	113.0	24.8	400	1.1	1470	4470	12.4	400	0.56	1890	6090	
F 25 3_127.8	127.8	21.9	400	0.99	1480	4730	11.0	400	0.49	1900	6430	
F 25 3_143.0	143.0	19.6	400	0.88	1480	4980	9.8	400	0.44	1910	6500	
F 25 3_155.9	155.9	18.0	400	0.81	1480	5180	9.0	400	0.40	1910	6500	
F 25 3_174.2	174.2	16.1	400	0.72	1490	5440	8.0	400	0.36	1910	6500	
F 25 3_193.6	193.6	14.5	400	0.65	1490	5700	7.2	400	0.33	1910	6500	
F 25 3_227.8	227.8	12.3	400	0.55	1490	6120	6.1	400	0.28	1920	6500	
F 25 3_256.1	256.1	10.9	400	0.49	1490	6430	5.5	400	0.25	1920	6500	
F 25 3_288.1	288.1	9.7	400	0.44	1490	6500	4.9	400	0.22	1920	6500	
F 25 3_333.1	333.1	8.4	400	0.38	1500	6500	4.2	400	0.19	1930	6500	
F 25 4_393.9	393.9	7.1	400	0.33	1270	6500	3.6	400	0.17	1300	6500	
F 25 4_434.9	434.9	6.4	400	0.30	1290	6500	3.2	400	0.15	1300	6500	
F 25 4_466.0	466.0	6.0	400	0.28	1300	6500	3.0	400	0.14	1300	6500	
F 25 4_527.3	527.3	5.3	400	0.25	1300	6500	2.7	400	0.12	1300	6500	
F 25 4_589.7	589.7	4.7	400	0.22	1300	6500	2.4	400	0.11	1300	6500	
F 25 4_643.3	643.3	4.4	400	0.20	1300	6500	2.2	400	0.10	1300	6500	
F 25 4_718.7	718.7	3.9	400	0.18	1300	6500	1.9	400	0.09	1300	6500	
F 25 4_798.5	798.5	3.5	400	0.16	1300	6500	1.8	400	0.08	1300	6500	
F 25 4_939.8	939.8	3.0	400	0.14	1300	6500	1.5	400	0.07	1300	6500	
F 25 4_1057	1057	2.7	400	0.12	1300	6500	1.3	400	0.06	1300	6500	
F 25 4_1189	1189	2.4	400	0.11	1300	6500	1.2	400	0.05	1300	6500	
F 25 4_1374	1374	2.0	400	0.09	1300	6500	1.0	400	0.05	1300	6500	

(—) Contact our technical service department advising radial load data (rotation direction, orientation, position)

Bonfiglioli Riduttori

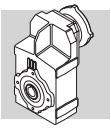

F 25 — 400 Nm

	i	n_1 = 900 min^{-1}					n_1 = 500 min^{-1}					
		n_2 min^{-1}	M_{n2} Nm	P_{n1} kW	R_{n1} N	R_{n2} N	n_2 min^{-1}	M_{n2} Nm	P_{n1} kW	R_{n1} N	R_{n2} N	
F 25 2_6.9	6.9	131	225	3.2	—	2690	73	255	2.0	370	3350	425
F 25 2_8.4	8.4	107	250	3.0	—	2840	60	260	1.7	590	3630	
F 25 2_9.4	9.4	96	260	2.8	—	2940	53	265	1.6	820	3780	
F 25 2_10.6	10.6	85	355	3.3	—	2680	47	395	2.0	360	3420	
F 25 2_13.0	13.0	69	370	2.8	—	2910	39	400	1.7	620	3750	
F 25 2_14.5	14.5	62	380	2.6	—	3030	35	400	1.5	940	3950	
F 25 2_16.6	16.6	54	395	2.4	—	3190	30	400	1.3	1070	4210	
F 25 2_18.6	18.6	48	400	2.1	300	3350	26.9	400	1.2	1330	4440	
F 25 2_21.8	21.8	41	400	1.8	420	3630	22.9	400	1.0	1450	4770	
F 25 2_23.8	23.8	38	400	1.7	530	3780	21.0	400	0.93	1560	4950	
F 25 2_27.2	27.2	33	400	1.5	610	4030	18.4	400	0.81	1640	5260	
F 25 2_30.0	30.0	30	400	1.3	760	4220	16.6	400	0.73	1790	5490	
F 25 2_32.2	32.2	28.0	400	1.2	760	4360	15.5	400	0.69	1790	5660	
F 25 2_36.4	36.4	24.7	400	1.1	970	4610	13.7	400	0.61	2000	5970	
F 25 2_40.7	40.7	22.1	375	0.91	1330	4950	12.3	375	0.51	2000	6360	
F 25 2_44.4	44.4	20.3	385	0.86	1230	5100	11.3	385	0.48	2000	6500	
F 25 3_45.6	45.6	19.8	400	0.89	2160	4960	11.0	400	0.49	2200	6420	
F 25 3_50.8	50.8	17.7	400	0.80	2180	5210	9.8	400	0.44	2200	6500	
F 25 3_58.3	58.3	15.4	400	0.69	2190	5540	8.6	400	0.39	2200	6500	
F 25 3_65.3	65.3	13.8	400	0.62	2200	5820	7.7	400	0.34	2200	6500	
F 25 3_76.6	76.6	11.8	400	0.53	2200	6240	6.5	400	0.29	2200	6500	
F 25 3_83.4	83.4	10.8	400	0.49	2200	6470	6.0	400	0.27	2200	6500	
F 25 3_95.5	95.5	9.4	400	0.42	2200	6500	5.2	400	0.24	2200	6500	
F 25 3_105.4	105.4	8.5	400	0.38	2200	6500	4.7	400	0.21	2200	6500	
F 25 3_113.0	113.0	8.0	400	0.36	2200	6500	4.4	400	0.20	2200	6500	
F 25 3_127.8	127.8	7.0	400	0.32	2200	6500	3.9	400	0.18	2200	6500	
F 25 3_143.0	143.0	6.3	400	0.28	2200	6500	3.5	400	0.16	2200	6500	
F 25 3_155.9	155.9	5.8	400	0.26	2200	6500	3.2	400	0.14	2200	6500	
F 25 3_174.2	174.2	5.2	400	0.23	2200	6500	2.9	400	0.13	2200	6500	
F 25 3_193.6	193.6	4.6	400	0.21	2200	6500	2.6	400	0.12	2200	6500	
F 25 3_227.8	227.8	4.0	400	0.18	2200	6500	2.2	400	0.10	2200	6500	
F 25 3_256.1	256.1	3.5	400	0.16	2200	6500	2.0	400	0.09	2200	6500	
F 25 3_288.1	288.1	3.1	400	0.14	2200	6500	1.7	400	0.08	2200	6500	
F 25 3_333.1	333.1	2.7	400	0.12	2200	6500	1.5	400	0.07	2200	6500	
F 25 4_393.9	393.9	2.3	400	0.11	1300	6500	1.3	400	0.06	1300	6500	
F 25 4_434.9	434.9	2.1	400	0.10	1300	6500	1.1	400	0.05	1300	6500	
F 25 4_466.0	466.0	1.9	400	0.09	1300	6500	1.1	400	0.05	1300	6500	
F 25 4_527.3	527.3	1.7	400	0.08	1300	6500	0.95	400	0.04	1300	6500	
F 25 4_589.7	589.7	1.5	400	0.07	1300	6500	0.85	400	0.04	1300	6500	
F 25 4_643.3	643.3	1.4	400	0.07	1300	6500	0.78	400	0.04	1300	6500	
F 25 4_718.7	718.7	1.3	400	0.06	1300	6500	0.70	400	0.03	1300	6500	
F 25 4_798.5	798.5	1.1	400	0.05	1300	6500	0.63	400	0.03	1300	6500	
F 25 4_939.8	939.8	0.96	400	0.04	1300	6500	0.53	400	0.02	1300	6500	
F 25 4_1057	1057	0.85	400	0.04	1300	6500	0.47	400	0.02	1300	6500	
F 25 4_1189	1189	0.76	400	0.04	1300	6500	0.42	400	0.02	1300	6500	
F 25 4_1374	1374	0.65	400	0.03	1300	6500	0.36	400	0.02	1300	6500	

(—) Contact our technical service department advising radial load data (rotation direction, orientation, position)

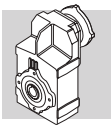

F 31 — 600 Nm

	i	n_1 = 2800 min^{-1}					n_1 = 1400 min^{-1}					
		n_2 min^{-1}	M_{n2} Nm	P_{n1} kW	R_{n1} N	R_{n2} N	n_2 min^{-1}	M_{n2} Nm	P_{n1} kW	R_{n1} N	R_{n2} N	
F 31 2_6.9	6.9	403	295	13.1	—	2710	201	360	8.0	—	3460	429
F 31 2_8.2	8.2	340	310	11.6	—	2880	170	375	7.0	—	3690	
F 31 2_9.0	9.0	311	310	10.6	—	3000	155	385	6.6	390	3810	
F 31 2_10.7	10.7	261	450	12.9	—	2790	130	525	7.5	500	3670	
F 31 2_12.7	12.7	220	475	11.5	—	2950	110	555	6.7	490	3880	
F 31 2_13.9	13.9	201	475	10.5	290	3100	100	570	6.3	650	4010	
F 31 2_16.8	16.8	167	475	8.7	510	3410	83	595	5.5	680	4310	
F 31 2_18.5	18.5	151	475	7.9	730	3580	76	600	5.0	910	4510	
F 31 2_21.1	21.1	133	475	6.9	830	3830	66	600	4.4	1030	4820	
F 31 2_23.4	23.4	120	475	6.3	1020	4020	60	600	4.0	1270	5060	
F 31 2_27.3	27.3	103	475	5.4	1100	4330	51	600	3.4	1380	5450	
F 31 2_30.1	30.1	93	475	4.9	1270	4540	46	600	3.1	1590	5710	
F 31 2_34.4	34.4	81	475	4.3	1330	4820	41	600	2.7	1660	6070	
F 31 2_37.7	37.7	74	475	3.9	1430	5030	37	600	2.5	1800	6330	
F 31 2_40.4	40.4	69	475	3.6	1440	5190	35	600	2.3	1800	6500	
F 31 2_44.6	44.6	63	475	3.3	1540	5430	31	600	2.1	1930	6500	
F 31 3_47.5	47.5	59	475	3.1	2110	5490	29.4	580	1.9	2200	6500	
F 31 3_52.1	52.1	54	485	2.9	2120	5680	26.9	600	1.8	2200	6500	
F 31 3_62.8	62.8	45	515	2.6	2120	6040	22.3	600	1.5	2200	6500	
F 31 3_69.1	69.1	41	530	2.4	2130	6250	20.3	600	1.4	2200	6500	
F 31 3_78.9	78.9	36	550	2.2	2120	6500	17.8	600	1.2	2200	6500	
F 31 3_87.4	87.4	32	570	2.1	2130	6500	16.0	600	1.1	2200	6500	
F 31 3_101.9	101.9	27.5	595	1.8	2130	6500	13.7	600	0.93	2200	6500	
F 31 3_112.5	112.5	24.9	600	1.7	2130	6500	12.4	600	0.84	2200	6500	
F 31 3_128.4	128.4	21.8	600	1.5	2140	6500	10.9	600	0.74	2200	6500	
F 31 3_140.7	140.7	19.9	600	1.3	2140	6500	9.9	600	0.67	2200	6500	
F 31 3_150.8	150.8	18.6	600	1.3	2140	6500	9.3	600	0.63	2200	6500	
F 31 3_166.8	166.8	16.8	600	1.1	2150	6500	8.4	600	0.57	2200	6500	
F 31 3_185.4	185.4	15.1	600	1.0	2160	6500	7.5	600	0.51	2200	6500	
F 31 3_202.3	202.3	13.8	600	0.94	2160	6500	6.9	600	0.47	2200	6500	
F 31 3_228.2	228.2	12.3	600	0.83	2160	6500	6.1	600	0.41	2200	6500	
F 31 3_253.6	253.6	11.0	600	0.75	2160	6500	5.5	600	0.37	2200	6500	
F 31 3_293.8	293.8	9.5	600	0.64	2170	6500	4.8	600	0.32	2200	6500	
F 31 3_332.8	332.8	8.4	600	0.57	2170	6500	4.2	600	0.28	2200	6500	
F 31 3_374.4	374.4	7.5	600	0.51	2170	6500	3.7	600	0.25	2200	6500	
F 31 4_418.9	418.9	6.7	600	0.47	1230	6500	3.3	600	0.23	1300	6500	
F 31 4_462.6	462.6	6.1	600	0.42	1250	6500	3.0	600	0.21	1300	6500	
F 31 4_527.8	527.8	5.3	600	0.37	1270	6500	2.7	600	0.19	1300	6500	
F 31 4_578.6	578.6	4.8	600	0.34	1290	6500	2.4	600	0.17	1300	6500	
F 31 4_619.9	619.9	4.5	600	0.32	1300	6500	2.3	600	0.16	1300	6500	
F 31 4_685.6	685.6	4.1	600	0.29	1300	6500	2.0	600	0.14	1300	6500	
F 31 4_762.3	762.3	3.7	600	0.26	1300	6500	1.8	600	0.13	1300	6500	
F 31 4_831.6	831.6	3.4	600	0.24	1300	6500	1.7	600	0.12	1300	6500	
F 31 4_938.2	938.2	3.0	600	0.21	1300	6500	1.5	600	0.10	1300	6500	
F 31 4_1042	1042	2.7	600	0.19	1300	6500	1.3	600	0.09	1300	6500	
F 31 4_1208	1208	2.3	600	0.16	1300	6500	1.2	600	0.08	1300	6500	
F 31 4_1368	1368	2.0	600	0.14	1300	6500	1.0	600	0.07	1300	6500	
F 31 4_1539	1539	1.8	600	0.13	1300	6500	0.91	600	0.06	1300	6500	

(—) Contact our technical service department advising radial load data (rotation direction, orientation, position)

Bonfiglioli Riduttori

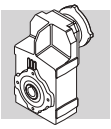

F 31 600 Nm

	i	n_1 = 900 min^{-1}					n_1 = 500 min^{-1}					
		n_2 min^{-1}	M_{n2} Nm	P_{n1} kW	R_{n1} N	R_{n2} N	n_2 min^{-1}	M_{n2} Nm	P_{n1} kW	R_{n1} N	R_{n2} N	
F 31 2_6.9	6.9	130	390	5.6	640	4120	72	390	3.1	2200	5350	429
F 31 2_8.2	8.2	109	390	4.7	990	4450	61	390	2.6	2200	5760	
F 31 2_9.0	9.0	100	390	4.3	1320	4640	55	390	2.4	2200	5980	
F 31 2_10.7	10.7	84	600	5.5	670	4280	47	600	3.1	2200	5710	
F 31 2_12.7	12.7	71	600	4.7	1020	4670	39	600	2.6	2200	6170	
F 31 2_13.9	13.9	65	600	4.3	1350	4880	36	600	2.4	2200	6440	
F 31 2_16.8	16.8	54	600	3.5	1640	5340	29.8	600	2.0	2200	6500	
F 31 2_18.5	18.5	49	600	3.2	1915	5580	27.0	600	1.8	2200	6500	
F 31 2_21.1	21.1	43	600	2.8	2040	5950	23.7	600	1.6	2200	6500	
F 31 2_23.4	23.4	38	600	2.5	2200	6230	21.4	600	1.4	2200	6500	
F 31 2_27.3	27.3	33	600	2.2	2200	6500	18.3	600	1.2	2200	6500	
F 31 2_30.1	30.1	29.9	600	2.0	2200	6500	16.6	600	1.1	2200	6500	
F 31 2_34.4	34.4	26.2	600	1.7	2200	6500	14.6	600	0.96	2200	6500	
F 31 2_37.7	37.7	23.9	600	1.6	2200	6500	13.3	600	0.88	2200	6500	
F 31 2_40.4	40.4	22.3	600	1.5	2200	6500	12.4	600	0.82	2200	6500	
F 31 2_44.6	44.6	20.2	600	1.3	2200	6500	11.2	600	0.74	2200	6500	
F 31 3_47.5	47.5	18.9	600	1.3	2200	6500	10.5	600	0.71	2200	6500	
F 31 3_52.1	52.1	17.3	600	1.2	2200	6500	9.6	600	0.65	2200	6500	
F 31 3_62.8	62.8	14.3	600	0.97	2200	6500	8.0	600	0.54	2200	6500	
F 31 3_69.1	69.1	13.0	600	0.88	2200	6500	7.2	600	0.49	2200	6500	
F 31 3_78.9	78.9	11.4	600	0.77	2200	6500	6.3	600	0.43	2200	6500	
F 31 3_87.4	87.4	10.3	600	0.70	2200	6500	5.7	600	0.39	2200	6500	
F 31 3_101.9	101.9	8.8	600	0.60	2200	6500	4.9	600	0.33	2200	6500	
F 31 3_112.5	112.5	8.0	600	0.54	2200	6500	4.4	600	0.30	2200	6500	
F 31 3_128.4	128.4	7.0	600	0.47	2200	6500	3.9	600	0.26	2200	6500	
F 31 3_140.7	140.7	6.4	600	0.43	2200	6500	3.6	600	0.24	2200	6500	
F 31 3_150.8	150.8	6.0	600	0.40	2200	6500	3.3	600	0.22	2200	6500	
F 31 3_166.8	166.8	5.4	600	0.36	2200	6500	3.0	600	0.20	2200	6500	
F 31 3_185.4	185.4	4.9	600	0.33	2200	6500	2.7	600	0.18	2200	6500	
F 31 3_202.3	202.3	4.4	600	0.30	2200	6500	2.5	600	0.17	2200	6500	
F 31 3_228.2	228.2	3.9	600	0.27	2200	6500	2.2	600	0.15	2200	6500	
F 31 3_253.6	253.6	3.5	600	0.24	2200	6500	2.0	600	0.13	2200	6500	
F 31 3_293.8	293.8	3.1	600	0.21	2200	6500	1.7	600	0.11	2200	6500	
F 31 3_332.8	332.8	2.7	600	0.18	2200	6500	1.5	600	0.10	2200	6500	
F 31 3_374.4	374.4	2.4	600	0.16	2200	6500	1.3	600	0.09	2200	6500	
F 31 4_418.9	418.9	2.1	600	0.15	1300	6500	1.2	600	0.08	1300	6500	
F 31 4_462.6	462.6	1.9	600	0.14	1300	6500	1.1	600	0.08	1300	6500	
F 31 4_527.8	527.8	1.7	600	0.12	1300	6500	0.95	600	0.07	1300	6500	
F 31 4_578.6	578.6	1.6	600	0.11	1300	6500	0.86	600	0.06	1300	6500	
F 31 4_619.9	619.9	1.5	600	0.10	1300	6500	0.81	600	0.06	1300	6500	
F 31 4_685.6	685.6	1.3	600	0.09	1300	6500	0.73	600	0.05	1300	6500	
F 31 4_762.3	762.3	1.2	600	0.08	1300	6500	0.66	600	0.05	1300	6500	
F 31 4_831.6	831.6	1.1	600	0.08	1300	6500	0.60	600	0.04	1300	6500	
F 31 4_938.2	938.2	0.96	600	0.07	1300	6500	0.53	600	0.04	1300	6500	
F 31 4_1042	1042	0.86	600	0.06	1300	6500	0.48	600	0.03	1300	6500	
F 31 4_1208	1208	0.75	600	0.05	1300	6500	0.41	600	0.03	1300	6500	
F 31 4_1368	1368	0.66	600	0.05	1300	6500	0.37	600	0.03	1300	6500	
F 31 4_1539	1539	0.58	600	0.04	1300	6500	0.32	600	0.02	1300	6500	

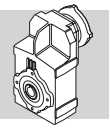

F 41 — 1100 Nm

	i	n_1 = 2800 min^{-1}					n_1 = 1400 min^{-1}					
		n_2 min^{-1}	M_{n2} Nm	P_{n1} kW	R_{n1} N	R_{n2} N	n_2 min^{-1}	M_{n2} Nm	P_{n1} kW	R_{n1} N	R_{n2} N	
F 41 2_6.7	6.7	416	460	21	—	3410	208	580	13.3	—	4290	431
F 41 2_9.1	9.1	306	515	17.4	—	3750	153	650	11.0	—	4730	
F 41 2_10.8	10.8	260	715	21	—	3310	130	900	12.9	—	4170	
F 41 2_14.6	14.6	191	805	17.0	—	3620	96	1015	10.7	—	4560	
F 41 2_17.1	17.1	164	835	15.1	—	3860	82	1055	9.5	—	4850	
F 41 2_18.9	18.9	148	860	14.0	410	4000	74	1085	8.9	500	5030	
F 41 2_24.1	24.1	116	875	11.2	650	4540	58	1100	7.0	840	5730	
F 41 2_30.1	30.1	93	875	9.0	980	5130	46	1100	5.6	1260	6470	
F 41 2_38.2	38.2	73	875	7.1	1260	5810	37	1100	4.4	1600	7330	
F 41 2_47.9	47.9	58	850	5.5	1680	6600	29.2	1070	3.4	2120	8320	
F 41 3_51.5	51.5	54	880	5.4	3030	6750	27.2	1085	3.3	3500	8500	
F 41 3_60.2	60.2	46	930	4.9	3030	7100	23.2	1100	2.9	3500	8500	
F 41 3_66.5	66.5	42	980	4.6	3030	7280	21.1	1100	2.6	3500	8500	
F 41 3_84.9	84.9	33	1065	4.0	3030	7890	16.5	1100	2.0	3500	8500	
F 41 3_106.0	106.0	26.4	1100	3.3	3040	8500	13.2	1100	1.6	3500	8500	
F 41 3_134.4	134.4	20.8	1100	2.6	3050	8500	10.4	1100	1.3	3500	8500	
F 41 3_168.7	168.7	16.6	1100	2.1	3070	8500	8.3	1100	1.0	3500	8500	
F 41 3_180.7	180.7	15.5	1100	1.9	3070	8500	7.7	1100	0.96	3500	8500	
F 41 3_198.9	198.9	14.1	1100	1.7	3080	8500	7.0	1100	0.87	3500	8500	
F 41 3_220.1	220.1	12.7	1100	1.6	3090	8500	6.4	1100	0.79	3500	8500	
F 41 3_240.1	240.1	11.7	1100	1.4	3090	8500	5.8	1100	0.72	3500	8500	
F 41 3_266.9	266.9	10.5	1100	1.3	3090	8500	5.2	1100	0.65	3500	8500	
F 41 3_296.6	296.6	9.4	1100	1.2	3090	8500	4.7	1100	0.58	3500	8500	
F 41 3_344.8	344.8	8.1	1100	1.0	3100	8500	4.1	1100	0.50	3500	8500	
F 41 4_433.7	433.7	6.5	1100	0.83	1480	8500	3.2	1100	0.41	1910	8500	
F 41 4_549.8	549.8	5.1	1100	0.65	1520	8500	2.5	1100	0.33	1940	8500	
F 41 4_690.1	690.1	4.1	1100	0.52	1540	8500	2.0	1100	0.26	1970	8500	
F 41 4_739.4	739.4	3.8	1100	0.48	1550	8500	1.9	1100	0.24	1980	8500	
F 41 4_813.8	813.8	3.4	1100	0.44	1560	8500	1.7	1100	0.22	1990	8500	
F 41 4_900.5	900.5	3.1	1100	0.40	1570	8500	1.6	1100	0.20	2000	8500	
F 41 4_982.4	982.4	2.9	1100	0.36	1570	8500	1.4	1100	0.18	2000	8500	
F 41 4_1092	1092	2.6	1100	0.33	1580	8500	1.3	1100	0.16	2010	8500	
F 41 4_1213	1213	2.3	1100	0.30	1590	8500	1.2	1100	0.15	2020	8500	
F 41 4_1411	1411	2.0	1100	0.25	1600	8500	1.0	1100	0.13	2020	8500	

(—) Contact our technical service department advising radial load data (rotation direction, orientation, position)

Bonfiglioli Riduttori

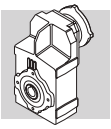

F 41 — 1100 Nm

	i	n_1 = 900 min^{-1}					n_1 = 500 min^{-1}					
		n_2 min^{-1}	M_{n2} Nm	P_{n1} kW	R_{n1} N	R_{n2} N	n_2 min^{-1}	M_{n2} Nm	P_{n1} kW	R_{n1} N	R_{n2} N	
F 41 2_6.7	6.7	134	670	9.9	—	4980	74	700	5.7	1760	6450	431
F 41 2_9.1	9.1	99	700	7.6	680	5660	55	700	4.2	2850	7410	
F 41 2_10.8	10.8	84	1025	9.4	480	4900	46	1100	5.6	1950	6480	
F 41 2_14.6	14.6	62	1100	7.5	860	5550	34	1100	4.1	3030	7590	
F 41 2_17.1	17.1	53	1100	6.4	1230	6060	29.2	1100	3.5	3400	8210	
F 41 2_18.9	18.9	48	1100	5.8	1760	6390	26.5	1100	3.2	3500	8500	
F 41 2_24.1	24.1	37	1100	4.5	2210	7260	20.7	1100	2.5	3500	8500	
F 41 2_30.1	30.1	29.9	1100	3.6	2630	8120	16.6	1100	2.0	3500	8500	
F 41 2_38.2	38.2	23.6	1100	2.9	2970	8500	13.1	1100	1.6	3500	8500	
F 41 2_47.9	47.9	18.8	1070	2.2	3490	8500	10.4	1070	1.2	3500	8500	
F 41 3_51.5	51.5	17.5	1100	2.2	3500	8500	9.7	1100	1.2	3500	8500	
F 41 3_60.2	60.2	14.9	1100	1.9	3500	8500	8.3	1100	1.0	3500	8500	
F 41 3_66.5	66.5	13.5	1100	1.7	3500	8500	7.5	1100	0.93	3500	8500	
F 41 3_84.9	84.9	10.6	1100	1.3	3500	8500	5.9	1100	0.73	3500	8500	
F 41 3_106.0	106.0	8.5	1100	1.1	3500	8500	4.7	1100	0.58	3500	8500	
F 41 3_134.4	134.4	6.7	1100	0.83	3500	8500	3.7	1100	0.46	3500	8500	
F 41 3_168.7	168.7	5.3	1100	0.66	3500	8500	3.0	1100	0.37	3500	8500	
F 41 3_180.7	180.7	5.0	1100	0.62	3500	8500	2.8	1100	0.34	3500	8500	
F 41 3_198.9	198.9	4.5	1100	0.56	3500	8500	2.5	1100	0.31	3500	8500	
F 41 3_220.1	220.1	4.1	1100	0.51	3500	8500	2.3	1100	0.28	3500	8500	
F 41 3_240.1	240.1	3.7	1100	0.46	3500	8500	2.1	1100	0.26	3500	8500	
F 41 3_266.9	266.9	3.4	1100	0.42	3500	8500	1.9	1100	0.23	3500	8500	
F 41 3_296.6	296.6	3.0	1100	0.38	3500	8500	1.7	1100	0.21	3500	8500	
F 41 3_344.8	344.8	2.6	1100	0.32	3500	8500	1.5	1100	0.18	3500	8500	
F 41 4_433.7	433.7	2.1	1100	0.27	2200	8500	1.2	1100	0.15	2200	8500	
F 41 4_549.8	549.8	1.6	1100	0.21	2200	8500	0.91	1100	0.12	2200	8500	
F 41 4_690.1	690.1	1.3	1100	0.17	2200	8500	0.72	1100	0.09	2200	8500	
F 41 4_739.4	739.4	1.2	1100	0.16	2200	8500	0.68	1100	0.09	2200	8500	
F 41 4_813.8	813.8	1.1	1100	0.14	2200	8500	0.61	1100	0.08	2200	8500	
F 41 4_900.5	900.5	1.0	1100	0.13	2200	8500	0.56	1100	0.07	2200	8500	
F 41 4_982.4	982.4	0.92	1100	0.12	2200	8500	0.51	1100	0.07	2200	8500	
F 41 4_1092	1092	0.82	1100	0.11	2200	8500	0.46	1100	0.06	2200	8500	
F 41 4_1213	1213	0.74	1100	0.09	2200	8500	0.41	1100	0.05	2200	8500	
F 41 4_1411	1411	0.64	1100	0.08	2200	8500	0.35	1100	0.05	2200	8500	

(—) Contact our technical service department advising radial load data (rotation direction, orientation, position)

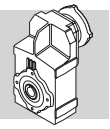

F 51 — 1800 Nm

	i	n_1 = 2800 min^{-1}					n_1 = 1400 min^{-1}					
		n_2 min^{-1}	M_{n2} Nm	P_{n1} kW	R_{n1} N	R_{n2} N	n_2 min^{-1}	M_{n2} Nm	P_{n1} kW	R_{n1} N	R_{n2} N	
F 51 2_7.2	7.2	389	775	33	990	4170	195	975	21	1440	5260	
F 51 2_9.1	9.1	309	875	30	890	4400	155	1100	18.8	1320	5550	
F 51 2_11.1	11.1	252	1055	29	1460	4530	126	1330	18.5	2010	5700	
F 51 2_14.0	14.0	200	1125	25	1580	4920	100	1420	15.7	2150	6200	
F 51 2_18.8	18.8	149	1225	20	1660	5480	74	1545	12.7	2240	6900	
F 51 2_23.8	23.8	118	1310	17.0	1710	5960	59	1650	10.7	2290	7520	
F 51 2_30.0	30.0	93	1350	13.9	1760	6610	47	1700	8.7	2330	8340	
F 51 2_37.1	37.1	75	1350	11.2	1910	7350	38	1700	7.1	2410	9260	
F 51 3_48.9	48.9	57	1505	9.7	2600	7800	28.6	1800	5.8	3310	10100	
F 51 3_65.8	65.8	43	1650	7.9	2610	8640	21.3	1800	4.3	3380	11600	
F 51 3_83.2	83.2	34	1770	6.7	2630	9380	16.8	1800	3.4	3440	12000	
F 51 3_105.1	105.1	26.6	1800	5.4	2650	10400	13.3	1800	2.7	3460	12000	
F 51 3_129.9	129.9	21.6	1800	4.4	2670	11600	10.8	1800	2.2	3490	12000	
F 51 3_165.6	165.6	16.9	1800	3.4	2700	12000	8.5	1800	1.7	3500	12000	
F 51 3_202.4	202.4	13.8	1800	2.8	2710	12000	6.9	1800	1.4	3500	12000	
F 51 3_216.9	216.9	12.9	1800	2.6	2710	12000	6.5	1800	1.3	3500	12000	437
F 51 3_239.8	239.8	11.7	1800	2.4	2730	12000	5.8	1800	1.2	3500	12000	
F 51 3_262.1	262.1	10.7	1800	2.2	2730	12000	5.3	1800	1.1	3500	12000	
F 51 3_285.9	285.9	9.8	1800	2.0	2730	12000	4.9	1800	0.99	3500	12000	
F 51 3_317.3	317.3	8.8	1800	1.8	2740	12000	4.4	1800	0.89	3500	12000	
F 51 3_352.5	352.5	7.9	1800	1.6	2740	12000	4.0	1800	0.80	3500	12000	
F 51 4_429.1	429.1	6.5	1800	1.4	1930	12000	3.3	1800	0.68	2200	12000	
F 51 4_530.5	530.5	5.3	1800	1.1	1970	12000	2.6	1800	0.55	2200	12000	
F 51 4_676.3	676.3	4.1	1800	0.87	2020	12000	2.1	1800	0.43	2200	12000	
F 51 4_826.4	826.4	3.4	1800	0.71	2040	12000	1.7	1800	0.35	2200	12000	
F 51 4_885.5	885.5	3.2	1800	0.66	2050	12000	1.6	1800	0.33	2200	12000	
F 51 4_979.4	979.4	2.9	1800	0.60	2060	12000	1.4	1800	0.30	2200	12000	
F 51 4_1070	1070	2.6	1800	0.55	2070	12000	1.3	1800	0.27	2200	12000	
F 51 4_1168	1168	2.4	1800	0.50	2080	12000	1.2	1800	0.25	2200	12000	
F 51 4_1296	1296	2.2	1800	0.45	2090	12000	1.1	1800	0.23	2200	12000	
F 51 4_1439	1439	1.9	1800	0.41	2100	12000	1.0	1800	0.20	2200	12000	

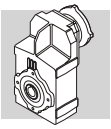

F 51 — 1800 Nm

	i	n_1 = 900 min^{-1}					n_1 = 500 min^{-1}					
		n_2 min^{-1}	M_{n2} Nm	P_{n1} kW	R_{n1} N	R_{n2} N	n_2 min^{-1}	M_{n2} Nm	P_{n1} kW	R_{n1} N	R_{n2} N	
F 51 2_7.2	7.2	125	1100	15.2	1940	6170	70	1100	8.4	3190	8140	
F 51 2_9.1	9.1	99	1100	12.1	2450	6900	55	1100	6.7	3440	9030	
F 51 2_11.1	11.1	81	1520	13.6	2450	6660	45	1700	8.4	3190	8480	
F 51 2_14.0	14.0	64	1620	11.5	2550	7250	36	1700	6.7	3440	9500	
F 51 2_18.8	18.8	48	1700	9.0	2690	8230	26.6	1700	5.0	3500	10900	
F 51 2_23.8	23.8	38	1700	7.1	2870	9250	21.0	1700	3.9	3500	12000	
F 51 2_30.0	30.0	30	1700	5.6	2960	10300	16.6	1700	3.1	3500	12000	
F 51 2_37.1	37.1	24.2	1700	4.5	3040	11400	13.5	1700	2.5	3500	12000	
F 51 3_48.9	48.9	18.4	1800	3.7	3500	12000	10.2	1800	2.1	3500	12000	
F 51 3_65.8	65.8	13.7	1800	2.8	3500	12000	7.6	1800	1.5	3500	12000	
F 51 3_83.2	83.2	10.8	1800	2.2	3500	12000	6.0	1800	1.2	3500	12000	
F 51 3_105.1	105.1	8.6	1800	1.7	3500	12000	4.8	1800	0.96	3500	12000	
F 51 3_129.9	129.9	6.9	1800	1.4	3500	12000	3.8	1800	0.78	3500	12000	
F 51 3_165.6	165.6	5.4	1800	1.1	3500	12000	3.0	1800	0.61	3500	12000	
F 51 3_202.4	202.4	4.4	1800	0.90	3500	12000	2.5	1800	0.50	3500	12000	
F 51 3_216.9	216.9	4.2	1800	0.84	3500	12000	2.3	1800	0.47	3500	12000	437
F 51 3_239.8	239.8	3.8	1800	0.76	3500	12000	2.1	1800	0.42	3500	12000	
F 51 3_262.1	262.1	3.4	1800	0.70	3500	12000	1.9	1800	0.39	3500	12000	
F 51 3_285.9	285.9	3.1	1800	0.64	3500	12000	1.7	1800	0.35	3500	12000	
F 51 3_317.3	317.3	2.8	1800	0.57	3500	12000	1.6	1800	0.32	3500	12000	
F 51 3_352.5	352.5	2.6	1800	0.52	3500	12000	1.4	1800	0.29	3500	12000	
F 51 4_429.1	429.1	2.1	1800	0.44	2200	12000	1.2	1800	0.24	2200	12000	
F 51 4_530.5	530.5	1.7	1800	0.36	2200	12000	0.94	1800	0.20	2200	12000	
F 51 4_676.3	676.3	1.3	1800	0.28	2200	12000	0.74	1800	0.15	2200	12000	
F 51 4_826.4	826.4	1.1	1800	0.23	2200	12000	0.61	1800	0.13	2200	12000	
F 51 4_885.5	885.5	1.0	1800	0.21	2200	12000	0.56	1800	0.12	2200	12000	
F 51 4_979.4	979.4	0.92	1800	0.19	2200	12000	0.51	1800	0.11	2200	12000	
F 51 4_1070	1070	0.84	1800	0.18	2200	12000	0.47	1800	0.10	2200	12000	
F 51 4_1168	1168	0.77	1800	0.16	2200	12000	0.43	1800	0.09	2200	12000	
F 51 4_1296	1296	0.69	1800	0.15	2200	12000	0.39	1800	0.08	2200	12000	
F 51 4_1439	1439	0.63	1800	0.13	2200	12000	0.35	1800	0.07	2200	12000	

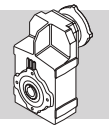

F 60 — 2900 Nm

	i	n_1 = 2800 min^{-1}					n_1 = 1400 min^{-1}					
		n_2 min^{-1}	M_{n2} Nm	P_{n1} kW	R_{n1} N	R_{n2} N	n_2 min^{-1}	M_{n2} Nm	P_{n1} kW	R_{n1} N	R_{n2} N	
F 60 3_9.0	9.0	311	920	32	—	13300	156	1160	20	—	16500	
F 60 3_9.7	9.7	289	1000	33	—	13600	144	1250	20	—	16700	
F 60 3_11.8	11.8	237	1030	28	—	14600	119	1300	17.4	—	17800	
F 60 3_12.7	12.7	220	1110	28	—	14700	110	1400	17.4	—	18000	
F 60 3_14.5	14.5	193	1110	24	—	15500	97	1400	15.3	—	19000	
F 60 3_15.7	15.7	178	1200	24	—	15600	89	1500	15.1	—	19200	
F 60 3_19.1	19.1	147	1200	19.9	—	16800	73	1500	12.4	—	20000	
F 60 3_20.7	20.7	135	1300	19.9	—	17000	68	1640	12.5	—	20000	
F 60 3_23.5	23.5	119	1260	17.0	—	17900	60	1590	10.7	—	20000	
F 60 3_25.4	25.4	110	1370	17.1	—	18100	55	1720	10.7	—	20000	
F 60 3_29.6	29.6	95	2750	29	820	15900	47	2900	15.5	2630	20000	
F 60 3_32.1	32.1	87	2800	28	1290	16200	44	2900	14.3	3260	20000	
F 60 3_38.8	38.8	72	2900	24	1260	17500	36	2900	11.8	3480	20000	
F 60 3_42.1	42.1	67	2900	22	1820	17900	33	2900	10.9	3720	20000	
F 60 3_47.8	47.8	59	2900	19.2	1770	19100	29.3	2900	9.6	3730	20000	
F 60 3_51.8	51.8	54	2900	17.7	2290	19500	27.0	2900	8.9	3830	20000	
F 60 3_63.0	63.0	44	2900	14.6	2310	20000	22.2	2900	7.3	3850	20000	
F 60 3_68.3	68.3	41	2900	13.4	2790	20000	20.5	2900	6.7	3940	20000	
F 60 3_77.6	77.6	36	2900	11.8	2620	20000	18.0	2900	5.9	3920	20000	
F 60 3_84.0	84.0	33	2900	10.9	2960	20000	16.7	2900	5.5	4010	20000	
F 60 3_98.2	98.2	28.5	2900	9.3	2910	20000	14.3	2900	4.7	3980	20000	
F 60 3_106.4	106.4	26.3	2900	8.6	3020	20000	13.2	2900	4.3	4070	20000	
F 60 3_120.5	120.5	23.2	2900	7.6	2970	20000	11.6	2900	3.8	4030	20000	
F 60 3_130.5	130.5	21.5	2900	7.0	3060	20000	10.7	2900	3.5	4110	20000	441
F 60 3_150.4	150.4	18.6	2900	6.1	3010	20000	9.3	2900	3.0	4060	20000	
F 60 3_162.9	162.9	17.2	2900	5.6	3090	20000	8.6	2900	2.8	4140	20000	
F 60 3_185.9	185.9	15.1	2900	4.9	3050	20000	7.5	2900	2.5	4100	20000	
F 60 3_201.4	201.4	13.9	2900	4.6	3130	20000	7.0	2900	2.3	4180	20000	
F 60 3_217.6	217.6	12.9	2900	4.2	3070	20000	6.4	2900	2.1	4120	20000	
F 60 3_235.8	235.8	11.9	2900	3.9	3140	20000	5.9	2900	1.9	4190	20000	
F 60 3_259.1	259.1	10.8	2900	3.5	3080	20000	5.4	2900	1.8	4130	20000	
F 60 3_280.7	280.7	10.0	2900	3.3	3150	20000	5.0	2900	1.6	4200	20000	
F 60 4_315.4	315.4	8.9	2900	3.0	3500	20000	4.4	2900	1.5	3500	20000	
F 60 4_341.7	341.7	8.2	2900	2.8	3500	20000	4.1	2900	1.4	3500	20000	
F 60 4_399.3	399.3	7.0	2900	2.4	3500	20000	3.5	2900	1.2	3500	20000	
F 60 4_432.6	432.6	6.5	2900	2.2	3500	20000	3.2	2900	1.1	3500	20000	
F 60 4_489.8	489.8	5.7	2900	1.9	3500	20000	2.9	2900	0.96	3500	20000	
F 60 4_530.7	530.7	5.3	2900	1.8	3500	20000	2.6	2900	0.89	3500	20000	
F 60 4_611.4	611.4	4.6	2900	1.5	3500	20000	2.3	2900	0.77	3500	20000	
F 60 4_662.4	662.4	4.2	2900	1.4	3500	20000	2.1	2900	0.71	3500	20000	
F 60 4_756.0	756.0	3.7	2900	1.2	3500	20000	1.9	2900	0.62	3500	20000	
F 60 4_819.0	819.0	3.4	2900	1.1	3500	20000	1.7	2900	0.57	3500	20000	
F 60 4_885.1	885.1	3.2	2900	1.1	3500	20000	1.6	2900	0.53	3500	20000	
F 60 4_958.9	958.9	2.9	2900	0.98	3500	20000	1.5	2900	0.49	3500	20000	
F 60 4_1054	1054	2.7	2900	0.89	3500	20000	1.3	2900	0.45	3500	20000	
F 60 4_1141	1141	2.5	2900	0.83	3500	20000	1.2	2900	0.41	3500	20000	

(—) Contact our technical service department advising radial load data (rotation direction, orientation, position)

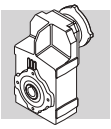

F 60 — 2900 Nm

	i	n_1 = 900 min^{-1}					n_1 = 500 min^{-1}					
		n_2 min^{-1}	M_{n2} Nm	P_{n1} kW	R_{n1} N	R_{n2} N	n_2 min^{-1}	M_{n2} Nm	P_{n1} kW	R_{n1} N	R_{n2} N	
F 60 3_9.0	9.0	100	1340	15.1	—	18800	56	1630	10.2	—	20000	
F 60 3_9.7	9.7	93	1460	15.3	—	19000	52	1780	10.4	—	20000	
F 60 3_11.8	11.8	76	1500	12.9	—	20000	42	1830	8.8	—	20000	
F 60 3_12.7	12.7	71	1620	13.0	—	20000	39	1900	8.4	600	20000	
F 60 3_14.5	14.5	62	1620	11.4	—	20000	34	1900	7.4	490	20000	
F 60 3_15.7	15.7	57	1750	11.3	—	20000	32	1900	6.8	1630	20000	
F 60 3_19.1	19.1	47	1750	9.3	—	20000	26.2	1900	5.6	1660	20000	
F 60 3_20.7	20.7	43	1900	9.3	—	20000	24.2	1900	5.2	2700	20000	
F 60 3_23.5	23.5	38	1840	8.0	—	20000	21.3	1900	4.6	2340	20000	
F 60 3_25.4	25.4	35	1900	7.6	620	20000	19.7	1900	4.2	3330	20000	
F 60 3_29.6	29.6	30	2900	10.0	4220	20000	16.9	2900	5.5	4700	20000	
F 60 3_32.1	32.1	28.0	2900	9.2	4350	20000	15.6	2900	5.1	4700	20000	
F 60 3_38.8	38.8	23.2	2900	7.6	4420	20000	12.9	2900	4.2	4700	20000	
F 60 3_42.1	42.1	21.4	2900	7.0	4530	20000	11.9	2900	3.9	4700	20000	
F 60 3_47.8	47.8	18.8	2900	6.2	4530	20000	10.5	2900	3.4	4700	20000	
F 60 3_51.8	51.8	17.4	2900	5.7	4640	20000	9.7	2900	3.2	4700	20000	
F 60 3_63.0	63.0	14.3	2900	4.7	4660	20000	7.9	2900	2.6	4700	20000	
F 60 3_68.3	68.3	13.2	2900	4.3	4700	20000	7.3	2900	2.4	4700	20000	
F 60 3_77.6	77.6	11.6	2900	3.8	4700	20000	6.4	2900	2.1	4700	20000	
F 60 3_84.0	84.0	10.7	2900	3.5	4700	20000	6.0	2900	1.9	4700	20000	
F 60 3_98.2	98.2	9.2	2900	3.0	4700	20000	5.1	2900	1.7	4700	20000	
F 60 3_106.4	106.4	8.5	2900	2.8	4700	20000	4.7	2900	1.5	4700	20000	
F 60 3_120.5	120.5	7.5	2900	2.4	4700	20000	4.1	2900	1.4	4700	20000	
F 60 3_130.5	130.5	6.9	2900	2.3	4700	20000	3.8	2900	1.3	4700	20000	441
F 60 3_150.4	150.4	6.0	2900	2.0	4700	20000	3.3	2900	1.1	4700	20000	
F 60 3_162.9	162.9	5.5	2900	1.8	4700	20000	3.1	2900	1.0	4700	20000	
F 60 3_185.9	185.9	4.8	2900	1.6	4700	20000	2.7	2900	0.88	4700	20000	
F 60 3_201.4	201.4	4.5	2900	1.5	4700	20000	2.5	2900	0.81	4700	20000	
F 60 3_217.6	217.6	4.1	2900	1.4	4700	20000	2.3	2900	0.75	4700	20000	
F 60 3_235.8	235.8	3.8	2900	1.3	4700	20000	2.1	2900	0.69	4700	20000	
F 60 3_259.1	259.1	3.5	2900	1.1	4700	20000	1.9	2900	0.63	4700	20000	
F 60 3_280.7	280.7	3.2	2900	1.1	4700	20000	1.8	2900	0.58	4700	20000	
F 60 4_315.4	315.4	2.9	2900	0.96	3500	20000	1.6	2900	0.53	3500	20000	
F 60 4_341.7	341.7	2.6	2900	0.89	3500	20000	1.5	2900	0.49	3500	20000	
F 60 4_399.3	399.3	2.3	2900	0.76	3500	20000	1.3	2900	0.42	3500	20000	
F 60 4_432.6	432.6	2.1	2900	0.70	3500	20000	1.2	2900	0.39	3500	20000	
F 60 4_489.8	489.8	1.8	2900	0.62	3500	20000	1.0	2900	0.34	3500	20000	
F 60 4_530.7	530.7	1.7	2900	0.57	3500	20000	0.94	2900	0.32	3500	20000	
F 60 4_611.4	611.4	1.5	2900	0.50	3500	20000	0.82	2900	0.28	3500	20000	
F 60 4_662.4	662.4	1.4	2900	0.46	3500	20000	0.75	2900	0.25	3500	20000	
F 60 4_756.0	756.0	1.2	2900	0.40	3500	20000	0.66	2900	0.22	3500	20000	
F 60 4_819.0	819.0	1.1	2900	0.37	3500	20000	0.61	2900	0.21	3500	20000	
F 60 4_885.1	885.1	1.0	2900	0.34	3500	20000	0.56	2900	0.19	3500	20000	
F 60 4_958.9	958.9	0.94	2900	0.32	3500	20000	0.52	2900	0.18	3500	20000	
F 60 4_1054	1054	0.85	2900	0.29	3500	20000	0.47	2900	0.16	3500	20000	
F 60 4_1141	1141	0.79	2900	0.27	3500	20000	0.44	2900	0.15	3500	20000	

(—) Contact our technical service department advising radial load data (rotation direction, orientation, position)

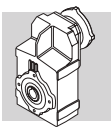

F 70 — 5000 Nm

	i	n_1 = 2800 min^{-1}					n_1 = 1400 min^{-1}					
		n_2 min^{-1}	M_{n2} Nm	P_{n1} kW	R_{n1} N	R_{n2} N	n_2 min^{-1}	M_{n2} Nm	P_{n1} kW	R_{n1} N	R_{n2} N	
F 70 3_10.0	10.0	280	2600	82	1410	14800	140	3200	51	1750	18200	445
F 70 3_10.9	10.9	257	2800	81	1510	14700	128	3450	50	1840	18100	
F 70 3_12.8	12.8	219	2900	72	860	15700	109	3600	44	880	19300	
F 70 3_13.9	13.9	201	3150	72	810	15600	101	3900	44	880	19100	
F 70 3_16.3	16.3	172	3250	63	570	16600	86	4000	39	710	20500	
F 70 3_17.7	17.7	158	3550	63	430	16400	79	4350	39	630	20200	
F 70 3_20.9	20.9	134	3450	52	690	18000	67	4000	30	2090	22700	
F 70 3_22.6	22.6	124	3750	52	640	17800	62	4350	30	2010	22500	
F 70 3_24.6	24.6	114	3550	46	560	19000	57	4000	26	2510	24200	
F 70 3_27.7	27.7	101	3750	43	5070	19600	51	4650	27	6410	24100	
F 70 3_30.0	30.0	93	4050	43	5080	19400	47	5000	26	6420	23900	
F 70 3_35.4	35.4	79	4150	37	5070	20900	40	5000	22	6440	25900	
F 70 3_38.4	38.4	73	4500	37	5060	20700	36	5000	21	6540	26500	
F 70 3_45.2	45.2	62	4600	32	5080	22200	31	5000	17.5	6590	28700	
F 70 3_49.0	49.0	57	4600	30	5170	22700	28.6	5000	16.1	6680	29300	
F 70 3_57.7	57.7	49	5000	27	5090	23800	24.3	5000	13.7	6680	31600	
F 70 3_62.5	62.5	45	5000	25	5170	24300	22.4	5000	12.7	6760	32300	
F 70 3_67.9	67.9	41	5000	23	5110	25500	20.6	5000	11.6	6710	33600	
F 70 3_73.6	73.6	38	5000	21	5190	26100	19.0	5000	10.7	6790	34400	
F 70 3_85.4	85.4	33	5000	18.5	5190	28000	16.4	5000	9.3	6780	35000	
F 70 3_92.5	92.5	30	5000	17.1	5260	28700	15.1	5000	8.5	6860	35000	
F 70 3_101.2	101.2	27.7	5000	15.6	5220	30000	13.8	5000	7.8	6820	35000	
F 70 3_109.6	109.6	25.5	5000	14.4	5290	30700	12.8	5000	7.2	6890	35000	
F 70 3_122.7	122.7	22.8	5000	12.9	5250	32300	11.4	5000	6.4	6850	35000	
F 70 3_133.0	133.0	21.1	5000	11.9	5320	33100	10.5	5000	5.9	6920	35000	
F 70 3_153.8	153.8	18.2	5000	10.3	5280	35000	9.1	5000	5.1	6880	35000	
F 70 3_166.7	166.7	16.8	5000	9.5	5350	35000	8.4	5000	4.7	6950	35000	
F 70 3_180.9	180.9	15.5	5000	8.7	5310	35000	7.7	5000	4.4	6910	35000	
F 70 3_196.0	196.0	14.3	5000	8.1	5370	35000	7.1	5000	4.0	6970	35000	
F 70 4_216.5	216.5	12.9	5000	7.5	2130	35000	6.5	5000	3.7	2860	35000	
F 70 4_234.6	234.6	11.9	5000	6.9	2130	35000	6.0	5000	3.5	2860	35000	
F 70 4_280.9	280.9	10.0	5000	5.8	2200	35000	5.0	5000	2.9	2940	35000	
F 70 4_304.3	304.3	9.2	5000	5.3	2200	35000	4.6	5000	2.7	2940	35000	
F 70 4_372.5	372.5	7.5	5000	4.4	2260	35000	3.8	5000	2.2	3000	35000	
F 70 4_403.5	403.5	6.9	5000	4.0	2260	35000	3.5	5000	2.0	3000	35000	
F 70 4_471.2	471.2	5.9	5000	3.4	2300	35000	3.0	5000	1.7	3040	35000	
F 70 4_510.4	510.4	5.5	5000	3.2	2300	35000	2.7	5000	1.6	3040	35000	
F 70 4_606.8	606.8	4.6	5000	2.7	2340	35000	2.3	5000	1.3	3070	35000	
F 70 4_657.4	657.4	4.3	5000	2.5	2340	35000	2.1	5000	1.2	3070	35000	
F 70 4_759.0	759.0	3.7	5000	2.1	2360	35000	1.8	5000	1.1	3090	35000	
F 70 4_822.2	822.2	3.4	5000	2.0	2360	35000	1.7	5000	1.0	3090	35000	
F 70 4_899.4	899.4	3.1	5000	1.8	2370	35000	1.6	5000	0.90	3110	35000	
F 70 4_974.4	974.4	2.9	5000	1.7	2370	35000	1.4	5000	0.83	3110	35000	
F 70 4_1091	1091	2.6	5000	1.5	2390	35000	1.3	5000	0.74	3120	35000	
F 70 4_1182	1182	2.4	5000	1.4	2390	35000	1.2	5000	0.69	3120	35000	
F 70 4_1368	1368	2.0	5000	1.2	2400	35000	1.0	5000	0.59	3130	35000	
F 70 4_1481	1481	1.9	5000	1.1	2400	35000	0.95	5000	0.55	3130	35000	
F 70 4_1585	1585	1.8	5000	1.0	2410	35000	0.88	5000	0.51	3140	35000	
F 70 4_1717	1717	1.6	5000	0.95	2410	35000	0.82	5000	0.47	3140	35000	
F 70 4_2019	2019	1.4	5000	0.80	2420	35000	0.69	5000	0.40	3150	35000	
F 70 4_2188	2188	1.3	5000	0.74	2420	35000	0.64	5000	0.37	3150	35000	

Bonfiglioli Riduttori

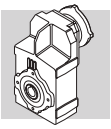

F 70 — 5000 Nm

	i	n_1 = 900 min^{-1}					n_1 = 500 min^{-1}					
		n_2 min^{-1}	M_{n2} Nm	P_{n1} kW	R_{n1} N	R_{n2} N	n_2 min^{-1}	M_{n2} Nm	P_{n1} kW	R_{n1} N	R_{n2} N	
F 70 3_10.0	10.0	90	3200	33	4870	21700	50	3200	18.1	7000	27000	445
F 70 3_10.9	10.9	83	3450	32	4970	21700	46	3450	17.9	7000	27200	
F 70 3_12.8	12.8	70	3850	31	2540	22500	39	3600	15.9	7000	28300	
F 70 3_13.9	13.9	65	4200	31	2380	22400	36	3900	15.8	7000	28300	
F 70 3_16.3	16.3	55	4000	25	3830	24500	31	4000	13.9	7000	30700	
F 70 3_17.7	17.7	51	4350	25	3750	24400	28.2	4350	13.9	7000	30800	
F 70 3_20.9	20.9	43	4000	19.5	5210	27000	23.9	4000	10.8	7000	33700	
F 70 3_22.6	22.6	40	4350	19.6	5130	26900	22.1	4350	10.9	7000	33800	
F 70 3_24.6	24.6	37	4000	16.5	5630	28700	20.3	4000	9.2	7000	35000	
F 70 3_27.7	27.7	32	5000	18.4	7000	28100	18.1	4650	9.5	7000	35000	
F 70 3_30.0	30.0	30	5000	16.9	7000	28800	16.7	5000	9.4	7000	35000	
F 70 3_35.4	35.4	25.4	5000	14.4	7000	31000	14.1	5000	8.0	7000	35000	
F 70 3_38.4	38.4	23.4	5000	13.2	7000	31700	13.0	5000	7.4	7000	35000	
F 70 3_45.2	45.2	19.9	5000	11.2	7000	34100	11.1	5000	6.2	7000	35000	
F 70 3_49.0	49.0	18.4	5000	10.4	7000	34900	10.2	5000	5.8	7000	35000	
F 70 3_57.7	57.7	15.6	5000	8.8	7000	35000	8.7	5000	4.9	7000	35000	
F 70 3_62.5	62.5	14.4	5000	8.1	7000	35000	8.0	5000	4.5	7000	35000	
F 70 3_67.9	67.9	13.3	5000	7.5	7000	35000	7.4	5000	4.2	7000	35000	
F 70 3_73.6	73.6	12.2	5000	6.9	7000	35000	6.8	5000	3.8	7000	35000	
F 70 3_85.4	85.4	10.5	5000	6.0	7000	35000	5.9	5000	3.3	7000	35000	
F 70 3_92.5	92.5	9.7	5000	5.5	7000	35000	5.4	5000	3.1	7000	35000	
F 70 3_101.2	101.2	8.9	5000	5.0	7000	35000	4.9	5000	2.8	7000	35000	
F 70 3_109.6	109.6	8.2	5000	4.6	7000	35000	4.6	5000	2.6	7000	35000	
F 70 3_122.7	122.7	7.3	5000	4.1	7000	35000	4.1	5000	2.3	7000	35000	
F 70 3_133.0	133.0	6.8	5000	3.8	7000	35000	3.8	5000	2.1	7000	35000	
F 70 3_153.8	153.8	5.9	5000	3.3	7000	35000	3.3	5000	1.8	7000	35000	
F 70 3_166.7	166.7	5.4	5000	3.0	7000	35000	3.0	5000	1.7	7000	35000	
F 70 3_180.9	180.9	5.0	5000	2.8	7000	35000	2.8	5000	1.6	7000	35000	
F 70 3_196.0	196.0	4.6	5000	2.6	7000	35000	2.6	5000	1.4	7000	35000	
F 70 4_216.5	216.5	4.2	5000	2.4	3430	35000	2.3	5000	1.3	3500	35000	
F 70 4_234.6	234.6	3.8	5000	2.2	3430	35000	2.1	5000	1.2	3500	35000	
F 70 4_280.9	280.9	3.2	5000	1.9	3500	35000	1.8	5000	1.0	3500	35000	
F 70 4_304.3	304.3	3.0	5000	1.7	3500	35000	1.6	5000	0.95	3500	35000	
F 70 4_372.5	372.5	2.4	5000	1.4	3500	35000	1.3	5000	0.78	3500	35000	
F 70 4_403.5	403.5	2.2	5000	1.3	3500	35000	1.2	5000	0.72	3500	35000	
F 70 4_471.2	471.2	1.9	5000	1.1	3500	35000	1.1	5000	0.62	3500	35000	
F 70 4_510.4	510.4	1.8	5000	1.0	3500	35000	0.98	5000	0.57	3500	35000	
F 70 4_606.8	606.8	1.5	5000	0.86	3500	35000	0.82	5000	0.48	3500	35000	
F 70 4_657.4	657.4	1.4	5000	0.79	3500	35000	0.76	5000	0.44	3500	35000	
F 70 4_759.0	759.0	1.2	5000	0.69	3500	35000	0.66	5000	0.38	3500	35000	
F 70 4_822.2	822.2	1.1	5000	0.63	3500	35000	0.61	5000	0.35	3500	35000	
F 70 4_899.4	899.4	1.0	5000	0.58	3500	35000	0.56	5000	0.32	3500	35000	
F 70 4_974.4	974.4	0.92	5000	0.54	3500	35000	0.51	5000	0.30	3500	35000	
F 70 4_1091	1091	0.82	5000	0.48	3500	35000	0.46	5000	0.27	3500	35000	
F 70 4_1182	1182	0.76	5000	0.44	3500	35000	0.42	5000	0.25	3500	35000	
F 70 4_1368	1368	0.66	5000	0.38	3500	35000	0.37	5000	0.21	3500	35000	
F 70 4_1481	1481	0.61	5000	0.35	3500	35000	0.34	5000	0.20	3500	35000	
F 70 4_1585	1585	0.57	5000	0.33	3500	35000	0.32	5000	0.18	3500	35000	
F 70 4_1717	1717	0.52	5000	0.30	3500	35000	0.29	5000	0.17	3500	35000	
F 70 4_2019	2019	0.45	5000	0.26	3500	35000	0.25	5000	0.14	3500	35000	
F 70 4_2188	2188	0.41	5000	0.24	3500	35000	0.23	5000	0.13	3500	35000	

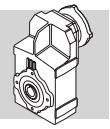

F 80 — 8000 Nm

	i	n_1 = 2800 min^{-1}					n_1 = 1400 min^{-1}					
		n_2 min^{-1}	M_{n2} Nm	P_{n1} kW	R_{n1} N	R_{n2} N	n_2 min^{-1}	M_{n2} Nm	P_{n1} kW	R_{n1} N	R_{n2} N	
F 80 3_10.3	10.3	272	3250	100	610	17200	136	4100	63	220	21800	
F 80 3_11.2	11.2	250	3520	99	620	17800	125	4440	63	230	21700	
F 80 3_12.9	12.9	217	3560	87	670	18900	109	4480	55	350	23100	
F 80 3_14.0	14.0	200	3850	87	700	18800	100	4860	55	310	23000	
F 80 3_16.2	16.2	173	3760	73	760	20300	86	4740	46	430	24800	
F 80 3_17.6	17.6	159	4000	72	730	20300	80	5140	46	410	24700	
F 80 3_20.3	20.3	138	4060	63	780	21700	69	5120	40	440	26500	
F 80 3_22.0	22.0	127	4400	63	780	21600	64	5540	40	470	26400	
F 80 3_25.2	25.2	111	4230	53	700	23300	56	5330	33	360	28500	
F 80 3_28.8	28.8	97	6550	72	4590	20500	49	8000	44	5890	25400	
F 80 3_31.3	31.3	89	7100	72	4590	20000	45	8000	40	6040	26000	
F 80 3_36.0	36.0	78	7250	64	4560	21500	39	8000	35	6110	28100	
F 80 3_39.0	39.0	72	6700	54	4890	23000	36	8000	32	6240	28800	
F 80 3_45.3	45.3	62	7900	55	4440	22700	31	8000	28	6240	31100	
F 80 3_49.1	49.1	57	8000	52	4750	23200	28.5	8000	26	6360	31900	
F 80 3_56.7	56.7	49	8000	45	4780	25200	24.7	8000	22	6390	34300	
F 80 3_61.5	61.5	46	8000	41	4890	25800	22.8	8000	21	6500	35100	
F 80 3_70.4	70.4	40	8000	36	4850	27800	19.9	8000	18.0	6460	37500	
F 80 3_76.3	76.3	37	8000	33	4950	28500	18.3	8000	16.6	6560	38400	
F 80 3_85.2	85.2	33	8000	30	4940	30300	16.4	8000	14.8	6550	40500	
F 80 3_92.3	92.3	30	8000	27	5040	31000	15.2	8000	13.7	6640	41500	
F 80 3_105.0	105.0	26.7	8000	24	5000	33200	13.3	8000	12.0	6610	44000	
F 80 3_113.8	113.8	24.6	8000	22	5090	34000	12.3	8000	11.1	6700	45000	
F 80 3_122.5	122.5	22.9	8000	21	5020	35400	11.4	8000	10.3	6630	45000	
F 80 3_132.7	132.7	21.1	8000	19.1	5110	36200	10.6	8000	9.5	6720	45000	
F 80 3_147.9	147.9	18.9	8000	17.1	5060	38200	9.5	8000	8.6	6660	45000	448
F 80 3_160.2	160.2	17.5	8000	15.8	5140	39100	8.7	8000	7.9	6750	45000	
F 80 3_184.6	184.6	15.2	8000	13.7	5090	41800	7.6	8000	6.9	6700	45000	
F 80 3_200.0	200.0	14.0	8000	12.7	5180	42800	7.0	8000	6.3	6780	45000	
F 80 4_218.5	218.5	12.8	8000	11.9	1020	45000	6.4	8000	5.9	2400	45000	
F 80 4_273.9	273.9	10.2	8000	9.5	1470	45000	5.1	8000	4.7	2680	45000	
F 80 4_296.7	296.7	9.4	8000	8.8	1470	45000	4.7	8000	4.4	2680	45000	
F 80 4_353.7	353.7	7.9	8000	7.3	1850	45000	4.0	8000	3.7	2770	45000	
F 80 4_383.2	383.2	7.3	8000	6.8	1850	45000	3.7	8000	3.4	2770	45000	
F 80 4_451.5	451.5	6.2	8000	5.8	2040	45000	3.1	8000	2.9	2820	45000	
F 80 4_489.1	489.1	5.7	8000	5.3	2040	45000	2.9	8000	2.7	2820	45000	
F 80 4_563.9	563.9	5.0	8000	4.6	2130	45000	2.5	8000	2.3	2860	45000	
F 80 4_610.9	610.9	4.6	8000	4.3	2130	45000	2.3	8000	2.1	2860	45000	
F 80 4_714.9	714.9	3.9	8000	3.6	2160	45000	2.0	8000	1.8	2890	45000	
F 80 4_774.4	774.4	3.6	8000	3.4	2160	45000	1.8	8000	1.7	2890	45000	
F 80 4_897.3	897.3	3.1	8000	2.9	2200	45000	1.6	8000	1.4	2930	45000	
F 80 4_972.0	972.0	2.9	8000	2.7	2200	45000	1.4	8000	1.3	2930	45000	
F 80 4_1058	1058	2.6	8000	2.5	2210	45000	1.3	8000	1.2	2950	45000	
F 80 4_1146	1146	2.4	8000	2.3	2210	45000	1.2	8000	1.1	2950	45000	
F 80 4_1277	1277	2.2	8000	2.0	2230	45000	1.1	8000	1.0	2960	45000	
F 80 4_1384	1384	2.0	8000	1.9	2230	45000	1.0	8000	0.94	2960	45000	
F 80 4_1578	1578	1.8	8000	1.6	2240	45000	0.89	8000	0.82	2970	45000	
F 80 4_1709	1709	1.6	8000	1.5	2240	45000	0.82	8000	0.76	2970	45000	
F 80 4_1834	1834	1.5	8000	1.4	2250	45000	0.76	8000	0.71	2980	45000	
F 80 4_1987	1987	1.4	8000	1.3	2250	45000	0.70	8000	0.65	2980	45000	

Bonfiglioli Riduttori

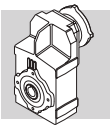

F 80 — 8000 Nm

	i	n_1 = 900 min^{-1}					n_1 = 500 min^{-1}					
		n_2 min^{-1}	M_{n2} Nm	P_{n1} kW	R_{n1} N	R_{n2} N	n_2 min^{-1}	M_{n2} Nm	P_{n1} kW	R_{n1} N	R_{n2} N	
F 80 3_10.3	10.3	87	4740	47	—	24700	49	5770	32	—	29300	
F 80 3_11.2	11.2	80	5140	47	—	24600	45	6250	32	—	29200	
F 80 3_12.9	12.9	70	5200	41	—	26200	39	6320	28	—	31100	
F 80 3_14.0	14.0	64	5620	41	—	26100	36	6800	27	—	31000	
F 80 3_16.2	16.2	56	5490	34	—	28200	31	6250	22	1540	34200	
F 80 3_17.6	17.6	51	5960	34	—	28100	28.4	6800	22	1410	30000	
F 80 3_20.3	20.3	44	5930	30	—	30100	24.6	6250	17.4	3710	37300	
F 80 3_22.0	22.0	41	6420	30	—	30000	22.7	6800	17.5	3590	37200	
F 80 3_25.2	25.2	36	6175	25	—	32400	19.8	6250	14.0	4660	40500	
F 80 3_28.8	28.8	31	8000	28	7000	31000	17.4	8000	15.7	7000	39600	
F 80 3_31.3	31.3	28.8	8000	26	7000	31700	16.0	8000	14.4	7000	40600	
F 80 3_36.0	36.0	25.0	8000	23	7000	34100	13.9	8000	12.6	7000	43300	
F 80 3_39.0	39.0	23.1	8000	21	7000	34900	12.8	8000	11.6	7000	44300	
F 80 3_45.3	45.3	19.9	8000	18.0	7000	37500	11.0	8000	10.0	7000	45000	
F 80 3_49.1	49.1	18.3	8000	16.6	7000	38400	10.2	8000	9.2	7000	45000	
F 80 3_56.7	56.7	15.9	8000	14.3	7000	41100	8.8	8000	8.0	7000	45000	
F 80 3_61.5	61.5	14.6	8000	13.2	7000	42000	8.1	8000	7.3	7000	45000	
F 80 3_70.4	70.4	12.8	8000	11.6	7000	44700	7.1	8000	6.4	7000	45000	
F 80 3_76.3	76.3	11.8	8000	10.7	7000	45000	6.6	8000	5.9	7000	45000	
F 80 3_85.2	85.2	10.6	8000	9.5	7000	45000	5.9	8000	5.3	7000	45000	
F 80 3_92.3	92.3	9.8	8000	8.8	7000	45000	5.4	8000	4.9	7000	45000	
F 80 3_105.0	105.0	8.6	8000	7.7	7000	45000	4.8	8000	4.3	7000	45000	
F 80 3_113.8	113.8	7.9	8000	7.1	7000	45000	4.4	8000	4.0	7000	45000	
F 80 3_122.5	122.5	7.3	8000	6.6	7000	45000	4.1	8000	3.7	7000	45000	
F 80 3_132.7	132.7	6.8	8000	6.1	7000	45000	3.8	8000	3.4	7000	45000	
F 80 3_147.9	147.9	6.1	8000	5.5	7000	45000	3.4	8000	3.1	7000	45000	448
F 80 3_160.2	160.2	5.6	8000	5.1	7000	45000	3.1	8000	2.8	7000	45000	
F 80 3_184.6	184.6	4.9	8000	4.4	7000	45000	2.7	8000	2.4	7000	45000	
F 80 3_200.0	200.0	4.5	8000	4.1	7000	45000	2.5	8000	2.3	7000	45000	
F 80 4_218.5	218.5	4.1	8000	3.8	3130	45000	2.3	8000	2.1	3500	45000	
F 80 4_273.9	273.9	3.3	8000	3.0	3240	45000	1.8	8000	1.7	3500	45000	
F 80 4_296.7	296.7	3.0	8000	2.8	3240	45000	1.7	8000	1.6	3500	45000	
F 80 4_353.7	353.7	2.5	8000	2.4	3330	45000	1.4	8000	1.3	3500	45000	
F 80 4_383.2	383.2	2.3	8000	2.2	3330	45000	1.3	8000	1.2	3500	45000	
F 80 4_451.5	451.5	2.0	8000	1.8	3380	45000	1.1	8000	1.0	3500	45000	
F 80 4_489.1	489.1	1.8	8000	1.7	3380	45000	1.0	8000	0.95	3500	45000	
F 80 4_563.9	563.9	1.6	8000	1.5	3420	45000	0.89	8000	0.82	3500	45000	
F 80 4_610.9	610.9	1.5	8000	1.4	3420	45000	0.82	8000	0.76	3500	45000	
F 80 4_714.9	714.9	1.3	8000	1.2	3460	45000	0.70	8000	0.65	3500	45000	
F 80 4_774.4	774.4	1.2	8000	1.1	3460	45000	0.65	8000	0.60	3500	45000	
F 80 4_897.3	897.3	1.0	8000	0.93	3490	45000	0.56	8000	0.52	3500	45000	
F 80 4_972.0	972.0	0.93	8000	0.86	3490	45000	0.51	8000	0.48	3500	45000	
F 80 4_1058	1058	0.85	8000	0.79	3500	45000	0.47	8000	0.44	3500	45000	
F 80 4_1146	1146	0.79	8000	0.73	3500	45000	0.44	8000	0.40	3500	45000	
F 80 4_1277	1277	0.70	8000	0.65	3500	45000	0.39	8000	0.36	3500	45000	
F 80 4_1384	1384	0.65	8000	0.60	3500	45000	0.36	8000	0.34	3500	45000	
F 80 4_1578	1578	0.57	8000	0.53	3500	45000	0.32	8000	0.29	3500	45000	
F 80 4_1709	1709	0.53	8000	0.49	3500	45000	0.29	8000	0.27	3500	45000	
F 80 4_1834	1834	0.49	8000	0.46	3500	45000	0.27	8000	0.25	3500	45000	
F 80 4_1987	1987	0.45	8000	0.42	3500	45000	0.25	8000	0.23	3500	45000	

(—) Contact our technical service department advising radial load data (rotation direction, orientation, position)

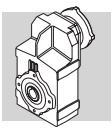

F 90 — 14000 Nm

	i	n_1 = 2800 min^{-1}					n_1 = 1400 min^{-1}					
		n_2 min^{-1}	M_{n2} Nm	P_{n1} kW	R_{n1} N	R_{n2} N	n_2 min^{-1}	M_{n2} Nm	P_{n1} kW	R_{n1} N	R_{n2} N	
F 90 3_10.3	10.3	272	6500	200	5480	23800	136	8000	123	8000	29300	451
F 90 3_11.1	11.1	252	7150	204	5280	23300	126	8800	125	7770	28700	
F 90 3_13.4	13.4	209	7550	178	4880	25000	104	9300	110	7280	30700	
F 90 3_14.5	14.5	193	8100	177	5000	24700	97	10000	109	7400	30300	
F 90 3_16.5	16.5	170	8400	161	4540	26000	85	10300	99	6960	32000	
F 90 3_17.9	17.9	156	8950	158	4560	25700	78	11000	97	7180	31700	
F 90 3_20.6	20.6	136	9200	141	3980	27400	68	11300	87	6260	33700	
F 90 3_22.3	22.3	126	9750	138	4280	27100	63	12000	85	6590	33400	
F 90 3_25.4	25.4	110	10050	125	3620	28700	55	12000	75	6310	36000	
F 90 3_28.6	28.6	98	9750	108	9800	30900	49	12000	66	12400	38000	
F 90 3_31.0	31.0	90	10550	108	9800	30300	45	13000	66	12400	37300	
F 90 3_37.4	37.4	75	10950	93	9820	32800	37	13500	57	12400	40400	
F 90 3_40.5	40.5	69	11900	93	9820	32100	35	14000	55	12500	40600	
F 90 3_46.1	46.1	61	12050	83	9840	34300	30	14000	48	12600	43600	
F 90 3_49.9	49.9	56	13050	83	9840	33500	28.1	14000	44	12700	44700	
F 90 3_57.3	57.3	49	13050	72	9810	36300	24.4	14000	39	12700	48100	
F 90 3_62.1	62.1	45	14000	71	9830	35600	22.5	14000	36	12800	49300	
F 90 3_70.8	70.8	40	14000	63	9830	38500	19.8	14000	31	12800	52700	
F 90 3_76.7	76.7	37	14000	58	9960	39500	18.3	14000	29	13000	54000	
F 90 3_88.4	88.4	32	14000	50	9930	42800	15.8	14000	25	12900	55000	
F 90 3_95.8	95.8	29.2	14000	46	10100	43800	14.6	14000	23	13100	55000	
F 90 3_103.3	103.3	27.1	14000	43	9960	45900	13.6	14000	21	13000	55000	
F 90 3_111.9	111.9	25.0	14000	40	10100	47100	12.5	14000	19.8	13100	55000	
F 90 3_126.8	126.8	22.1	14000	35	10000	50300	11.0	14000	17.5	13000	55000	
F 90 3_137.3	137.3	20.4	14000	32	10100	51500	10.2	14000	16.1	13100	55000	
F 90 3_150.3	150.3	18.6	14000	29	10100	54000	9.3	14000	14.7	13100	55000	
F 90 3_162.8	162.8	17.2	14000	27	10200	55000	8.6	14000	13.6	13200	55000	
F 90 3_179.2	179.2	15.6	14000	25	10200	55000	7.8	14000	12.4	13100	55000	
F 90 3_194.2	194.2	14.4	14000	23	10200	55000	7.2	14000	11.4	13200	55000	
F 90 4_213.6	213.6	13.1	14000	21	—	55000	6.6	14000	10.6	—	55000	
F 90 4_231.4	231.4	12.1	14000	19.6	—	55000	6.1	14000	9.8	—	55000	
F 90 4_268.7	268.7	10.4	14000	16.9	—	55000	5.2	14000	8.5	420	55000	
F 90 4_291.1	291.1	9.6	14000	15.6	—	55000	4.8	14000	7.8	420	55000	
F 90 4_361.8	361.8	7.7	14000	12.6	—	55000	3.9	14000	6.3	990	55000	
F 90 4_392.0	392.0	7.1	14000	11.6	—	55000	3.6	14000	5.8	990	55000	
F 90 4_457.5	457.5	6.1	14000	9.9	—	55000	3.1	14000	5.0	1390	55000	
F 90 4_495.6	495.6	5.6	14000	9.2	—	55000	2.8	14000	4.6	1390	55000	
F 90 4_577.5	577.5	4.8	14000	7.9	—	55000	2.4	14000	3.9	1600	55000	
F 90 4_625.6	625.6	4.5	14000	7.3	—	55000	2.2	14000	3.6	1600	55000	
F 90 4_714.0	714.0	3.9	14000	6.4	—	55000	2.0	14000	3.2	1800	55000	
F 90 4_773.4	773.4	3.6	14000	5.9	—	55000	1.8	14000	2.9	1800	55000	
F 90 4_910.2	910.2	3.1	14000	5.0	—	55000	1.5	14000	2.5	2020	55000	
F 90 4_986.0	986.0	2.8	14000	4.6	—	55000	1.4	14000	2.3	2020	55000	
F 90 4_1112	1112	2.5	14000	4.1	—	55000	1.3	14000	2.0	2110	55000	
F 90 4_1205	1205	2.3	14000	3.8	—	55000	1.2	14000	1.9	2110	55000	
F 90 4_1318	1318	2.1	14000	3.4	—	55000	1.1	14000	1.7	2220	55000	
F 90 4_1428	1428	2.0	14000	3.2	—	55000	0.98	14000	1.6	2220	55000	
F 90 4_1571	1571	1.8	14000	2.9	—	55000	0.89	14000	1.4	2260	55000	
F 90 4_1702	1702	1.6	14000	2.7	—	55000	0.82	14000	1.3	2260	55000	
F 90 4_1937	1937	1.4	14000	2.3	—	55000	0.72	14000	1.2	2300	55000	
F 90 4_2099	2099	1.3	14000	2.2	—	55000	0.67	14000	1.1	2300	55000	

(—) Contact our technical service department advising radial load data (rotation direction, orientation, position)

Bonfiglioli Riduttori

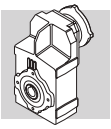

F 90 — 14000 Nm

	i	n_1 = 900 min^{-1}					n_1 = 500 min^{-1}					
		n_2 min^{-1}	M_{n2} Nm	P_{n1} kW	R_{n1} N	R_{n2} N	n_2 min^{-1}	M_{n2} Nm	P_{n1} kW	R_{n1} N	R_{n2} N	
F 90 3_10.3	10.3	87	9150	90	10000	33400	49	9600	53	15000	41900	451
F 90 3_11.1	11.1	81	10050	92	9780	32700	45	10400	53	15000	41600	
F 90 3_13.4	13.4	67	10600	80	9270	35100	37	12500	53	12700	42100	
F 90 3_14.5	14.5	62	11400	80	9390	34600	34	13550	53	12700	41400	
F 90 3_16.5	16.5	55	11750	72	8890	36600	30	12300	42	14600	46400	
F 90 3_17.9	17.9	50	12550	71	9140	36200	27.9	13150	41	14800	46200	
F 90 3_20.6	20.6	44	12200	60	9100	39700	24.3	12200	33	15000	51000	
F 90 3_22.3	22.3	40	13200	60	9120	39000	22.4	13200	33	15000	50700	
F 90 3_25.4	25.4	35	12000	48	10400	43800	19.7	12000	27	15000	55000	
F 90 3_28.6	28.6	31	13700	49	14400	43400	17.5	14000	28	15000	55000	
F 90 3_31.0	31.0	29.0	14000	46	14500	44000	16.1	14000	26	15000	55000	
F 90 3_37.4	37.4	24.1	14000	38	14700	48400	13.4	14000	21	15000	55000	
F 90 3_40.5	40.5	22.2	14000	35	14800	49600	12.3	14000	19.5	15000	55000	
F 90 3_46.1	46.1	19.5	14000	31	14900	53000	10.8	14000	17.2	15000	55000	
F 90 3_49.9	49.9	18.0	14000	29	15000	54200	10.0	14000	15.8	15000	55000	
F 90 3_57.3	57.3	15.7	14000	25	15000	55000	8.7	14000	13.8	15000	55000	
F 90 3_62.1	62.1	14.5	14000	23	15000	55000	8.1	14000	12.7	15000	55000	
F 90 3_70.8	70.8	12.7	14000	20	15000	55000	7.1	14000	11.2	15000	55000	
F 90 3_76.7	76.7	11.7	14000	18.6	15000	55000	6.5	14000	10.3	15000	55000	
F 90 3_88.4	88.4	10.2	14000	16.1	15000	55000	5.7	14000	8.9	15000	55000	
F 90 3_95.8	95.8	9.4	14000	14.9	15000	55000	5.2	14000	8.3	15000	55000	
F 90 3_103.3	103.3	8.7	14000	13.8	15000	55000	4.8	14000	7.7	15000	55000	
F 90 3_111.9	111.9	8.0	14000	12.7	15000	55000	4.5	14000	7.1	15000	55000	
F 90 3_126.8	126.8	7.1	14000	11.2	15000	55000	3.9	14000	6.2	15000	55000	
F 90 3_137.3	137.3	6.6	14000	10.4	15000	55000	3.6	14000	5.8	15000	55000	
F 90 3_150.3	150.3	6.0	14000	9.5	15000	55000	3.3	14000	5.3	15000	55000	
F 90 3_162.8	162.8	5.5	14000	8.7	15000	55000	3.1	14000	4.9	15000	55000	
F 90 3_179.2	179.2	5.0	14000	7.9	15000	55000	2.8	14000	4.4	15000	55000	
F 90 3_194.2	194.2	4.6	14000	7.3	15000	55000	2.6	14000	4.1	15000	55000	
F 90 4_213.6	213.6	4.2	14000	6.8	810	55000	2.3	14000	3.8	2350	55000	
F 90 4_231.4	231.4	3.9	14000	6.3	810	55000	2.2	14000	3.5	2350	55000	
F 90 4_268.7	268.7	3.3	14000	5.4	1390	55000	1.9	14000	3.0	2920	55000	
F 90 4_291.1	291.1	3.1	14000	5.0	1390	55000	1.7	14000	2.8	2920	55000	
F 90 4_361.8	361.8	2.5	14000	4.0	1960	55000	1.4	14000	2.2	3390	55000	
F 90 4_392.0	392.0	2.3	14000	3.7	1960	55000	1.3	14000	2.1	3390	55000	
F 90 4_457.5	457.5	2.0	14000	3.2	2360	55000	1.1	14000	1.8	3490	55000	
F 90 4_495.6	495.6	1.8	14000	2.9	2360	55000	1.0	14000	1.6	3490	55000	
F 90 4_577.5	577.5	1.6	14000	2.5	2570	55000	0.87	14000	1.4	3500	55000	
F 90 4_625.6	625.6	1.4	14000	2.3	2570	55000	0.80	14000	1.3	3500	55000	
F 90 4_714.0	714.0	1.3	14000	2.0	2770	55000	0.70	14000	1.1	3500	55000	
F 90 4_773.4	773.4	1.2	14000	1.9	2770	55000	0.65	14000	1.0	3500	55000	
F 90 4_910.2	910.2	0.99	14000	1.6	2840	55000	0.55	14000	0.89	3500	55000	
F 90 4_986.0	986.0	0.91	14000	1.5	2840	55000	0.51	14000	0.82	3500	55000	
F 90 4_1112	1112	0.81	14000	1.3	2860	55000	0.45	14000	0.73	3500	55000	
F 90 4_1205	1205	0.75	14000	1.2	2860	55000	0.41	14000	0.67	3500	55000	
F 90 4_1318	1318	0.68	14000	1.1	2890	55000	0.38	14000	0.62	3500	55000	
F 90 4_1428	1428	0.63	14000	1.0	2890	55000	0.35	14000	0.57	3500	55000	
F 90 4_1571	1571	0.57	14000	0.93	2900	55000	0.32	14000	0.52	3500	55000	
F 90 4_1702	1702	0.53	14000	0.86	2900	55000	0.29	14000	0.48	3500	55000	
F 90 4_1937	1937	0.46	14000	0.75	2910	55000	0.26	14000	0.42	3500	55000	
F 90 4_2099	2099	0.43	14000	0.70	2910	55000	0.24	14000	0.39	3500	55000	

61 MOTOR AVAILABILITY

Please be aware that motor-gearbox combinations resulting from the following charts are purely based on geometrical compatibility.

When selecting a gearmotor, refer to procedure specified at paragraph 12 and observe particularly the condition S ≥ f_S.

(D 56)

		IEC_ BN (IM B5)											
		BN										IEC	
P_{n1}(#) [kW]	2p	0.37	0.75	1.5	2.2	4	4	9.2	18.5	22	30	45	55
	4p	0.25	0.55	1.1	1.85	3	4	9.2	15	22	30	47	55
	6p	0.12	0.37	0.75	1.1	1.85	2.2	5.5	11	15	18.5	30	37
		P63	P71	P80	P90	P100	P112	P132	P160	P180	P200	P225	P250
F 10 2	i =	7.4_127.1		7.4_91.5		7.4_91.5							
F 20 2	i =	8.7_132.2 ⛔ (14.8_18.1)		6.4_114.3		6.4_114.3							
F 20 3	i =	156.3_545.3		156.3_545.3		156.3_545.3							
F 25 2	i =	9.4_44.4 ⛔ (10.6_13.0)		6.9_44.4		6.9_44.4							
F 25 3	i =	50.8_333.1		45.6_288.1		45.6_288.1							
F 25 4	i =	393.9_1374		393.9_1374		393.9_1374							
F 31 2	i =	18.5_44.6		6.9_44.6		6.9_44.6		6.9_37.7					
F 31 3	i =	69.1_374.4		47.5_374.4		47.5_374.4		47.5_140.7					
F 31 4	i =	418.9_1539		418.9_1539		418.9_1539							
F 41 2	i =	24.1_47.9		6.7_47.9		6.7_47.9		6.7_47.9					
F 41 3	i =	84.9_344.8		51.5_344.8		51.5_344.8		51.5_168.7					
F 41 4	i =	433.7_1411		433.7_1411		433.7_1411							
F 51 2	i =	30.0_37.1		7.2_37.1		7.2_37.1		7.2_37.1	7.2_37.1	7.2_37.1			
F 51 3	i =	105.1_352.5		48.9_352.5		48.9_352.5		48.9_202.4	48.9_202.4	48.9_202.4			
F 51 4	i =	429.1_1439		429.1_1439		429.1_1439							
F 60 3	i =	98.2_280.7		11.8_280.7 ⛔ (29.6_32.1)		11.8_280.7 ⛔ (29.6_32.1)		9.0_201.4	9.0_201.4	9.0_201.4			
F 60 4	i =	315.4_1141		315.4_1141		315.4_1141							
F 70 3	i =			85.4_196.0		85.4_196.0		16.3_196.0 ⛔ (27.7_38.4)	10.0_196.0	10.0_196.0	10.0_49.0 ⛔ (20.9_24.6)		
F 70 4	i =	372.5_2188		216.5_2188		216.5_2188		216.5_822.2					
F 80 3	i =			105.0_200.0		105.0_200.0		20.3_200.0 ⛔ (28.8_49.1)	12.9_200.0 ⛔ (28.8_31.3)	10.3_200.0	10.3_132.7	10.3_132.7	
F 80 4	i =	451.5_1987		218.5_1987		218.5_1987		218.5_972.0					
F 90 3	i =			126.8_194.2		126.8_194.2		25.4_194.2 ⛔ (28.6_62.1)	20.6_194.2 ⛔ (28.6_49.9)	10.3_194.2	10.3_162.8	10.3_162.8	10.3_162.8
F 90 4	i =	577.5_2099		213.6_2099		213.6_2099		213.6_1205	213.6_1205	213.6_1205			

(#) P_{n1} = maximum installable power on input P_

Bonfiglioli Riduttori

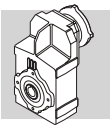

(D 57)

		M05	M1	M2	M3	M4	M5
F 10 2		7.4_127.1	7.4_71.1	7.4_91.5	7.4_91.5		
F 20 2		8.7_132.2 ⛔ (14.8_18.1)	8.7_90.4 ⛔ (14.8_18.1)	6.4_114.3	6.4_114.3		
F 20 3		156.3_545.3	156.3_545.3	156.3_545.3	156.3_545.3		
F 25 2		9.4_44.4 ⛔ (10.6_13.0)	9.4_44.4 ⛔ (10.6_13.0)	6.9_44.4	6.9_44.4		
F 25 3		50.8_333.1	50.8_227.8	45.6_288.1	45.6_288.1		
F 25 4		393.9_1374	393.9_1374	393.9_1374	393.9_1374		
F 31 2			18.5_44.6	6.9_44.6	6.9_44.6	6.9_37.7	
F 31 3			69.1_293.8	47.5_374.4	47.5_374.4	47.5_140.7	
F 31 4		418.9_1539	418.9_1539	418.9_1539	418.9_1539		
F 41 2			24.1_47.9	6.7_47.9	6.7_47.9	6.7_47.9	
F 41 3			84.9_344.8	51.5_344.8	51.5_344.8	51.5_168.7	
F 41 4	**i =**	433.7_1411	433.7_1411	433.7_1411	433.7_1411		
F 51 2			30.0_37.1	7.2_37.1	7.2_37.1	7.2_37.1	7.2_37.1
F 51 3			105.1_352.5	48.9_352.5	48.9_352.5	48.9_202.4	48.9_202.4
F 51 4			429.1_1439	429.1_1439	429.1_1439		
F 60 3				11.8_280.7 ⛔ (29.6_32.1)	11.8_280.7 ⛔ (29.6_32.1)	9_201.4	9_201.4
F 60 4			315.4_1141	315.4_1141	315.4_1141		
F 70 3				85.4_196.0	85.4_196.0	16.3_196.0 ⛔ (27.7_38.4)	16.3_196.0 ⛔ (27.7_38.4)
F 70 4			372.5_2188	216.5_2188	216.5_2188	216.5_822.2	
F 80 3					105.0_200.0	20.3_200.0 ⛔ (28.8_49.1)	20.3_200.0 ⛔ (28.8_49.1)
F 80 4			451.5_1987	218.5_1987	218.5_1987	218.5_972.0	
F 90 3					126.8_194.2	25.4_194.2 ⛔ (28.6_62.1)	25.4_194.2 ⛔ (28.6_62.1)
F 90 4				213.6_2099	213.6_2099	213.6_1205	

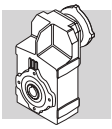

Motor adapters matching the most popular brands of servomotors are available for units size F 10 … F 60. Dimensions of servomotor inputs are provided within the drawing section for each frame size.
The code **SK** applies for inputs featuring a conventional keyway, while through the specification of the **SC** code the input shaft will feature a clamping device instead.

(D 58)

		SERVO INPUT							
		SK60A	SK60B	SK80A	SK80B	SK80C	SK95A	SK95B	SK95C
		SC60A	SC60B	SC80A	SC80B	SC80C	SC95A	SC95B	SC95C
F 10 2	i =	7.4_127.1	7.4_71.1	7.4_71.1		7.4_91.5	7.4_71.1	7.4_91.5	7.4_91.5
F 20 2		8.7_132.2 ⛔ (14.8_18.1)	8.7_90.4 ⛔ (14.8_18.1)	8.7_90.4 ⛔ (14.8_18.1)		6.4_114.3	8.7_90.4 ⛔ (14.8_18.1)	6.4_114.3	6.4_114.3
F 20 3		156.3_545.3	156.3_545.3	156.3_545.3		156.3_545.3	156.3_545.3	156.3_545.3	156.3_545.3
F 25 2		9.4_44.4 ⛔ (10.6_13.0)	9.4_44.4 ⛔ (10.6_13.0)	9.4_44.4 ⛔ (10.6_13.0)		6.9_44.4	9.4_44.4 ⛔ (10.6_13.0)	6.9_44.4	6.9_44.4
F 25 3		45.6_333.1	45.6_227.8	45.6_227.8		45.6_288.1	45.6_227.8	45.6_288.1	45.6_288.1
F 25 4		393.9_1374	393.9_1374	393.9_1374		393.9_1374	393.9_1374	393.9_1374	393.9_1374
F 31 2		18.5_44.6	18.5_44.6	18.5_44.6		6.9_44.6	18.5_44.6	6.9_44.6	6.9_44.6
F 31 3		69.1_374.4	69.1_293.8	69.1_293.8		47.5_374.4	69.1_293.8	47.5_374.4	47.5_374.4
F 31 4		418.9_1539	418.9_1539	418.9_1539		418.9_1539	418.9_1539	418.9_1539	418.9_1539
F 41 2					24.1_47.9	6.7_47.9	24.1_47.9	6.7_47.9	6.7_47.9
F 41 3					84.9_344.8	51.5_344.8	84.9_344.8	51.5_344.8	51.5_344.8
F 41 4		433.7_1411	433.7_1411	433.7_1411		433.7_1411	433.7_1411	433.7_1411	433.7_1411
F 51 2					30.0_37.1	7.2_37.1	30.0_37.1	7.2_37.1	7.2_37.1
F 51 3					105.1_352.5	48.9_352.5	105.1_352.5	48.9_352.5	48.9_352.5
F 51 4						429.1_1439	429.1_1439	429.1_1439	429.1_1439
F 60 3						11.8_280.7 ⛔ (29.6_32.1)	106.4_280.7	11.8_280.7 ⛔ (29.6_32.1)	11.8_280.7 ⛔ (29.6_32.1)
F 60 4					315.4_1141	315.4_1141	315.4_1141	315.4_1141	315.4_1141

(D 59)

		SERVO INPUT					
		SK110A	SK110B	SK130A	SK130B	SK180A	SK180B
		SC110A	SC110B	SC130A	SC130B	SC180A	SC180B
F 10 2	i =	7.4_91.5	7.4_91.5				
F 20 2		6.4_114.3	6.4_114.3				
F 20 3		156.3_545.3	156.3_545.3				
F 25 2		6.9_44.4	6.9_44.4				
F 25 3		45.6_288.1	45.6_288.1				
F 25 4		393.9_1374	393.9_1374				
F 31 2		6.9_44.6	6.9_44.6	6.9_44.6			
F 31 3		47.5_374.4	47.5_374.4	47.5_374.4			
F 31 4		418.9_1539	418.9_1539				
F 41 2		6.7_47.9	6.7_47.9	6.7_47.9	6.7_47.9	6.7_47.9	6.7_47.9
F 41 3		51.5_344.8	51.5_344.8	51.5_344.8	51.5_168.7	51.5_168.7	51.5_168.7
F 41 4		433.7_1411	433.7_1411				
F 51 2		7.2_37.1	7.2_37.1	7.2_37.1	7.2_37.1	7.2_37.1	7.2_37.1
F 51 3		48.9_352.5	48.9_352.5	48.9_352.5	48.9_202.4	48.9_202.4	48.9_202.4
F 51 4		429.1_1439	429.1_1439	429.1_1439			
F 60 3		11.8_280.7 ⛔ (29.6_32.1)	11.8_280.7 ⛔ (29.6_32.1)	11.8_280.7 ⛔ (29.6_32.1)	9.0_201.4	9.0_201.4	9.0_201.4
F 60 4		315.4_1141	315.4_1141	315.4_1141			

The following charts indicate moment of inertia values Jr [kgm²] referred to the gear unit high speed shaft. A key to the symbols used follows:

Values under this icon refer to compact gear units, without motor. To obtain the overall moment of inertia for the gearmotor just add the value of the inertia for the specific compact motor, given in the relevant rating chart.

IEC

Values under this symbol refer to gearboxes with IEC motor adaptor (IEC size...).

This symbol refers to gearbox values.

SERVO

Values under this symbol refer to gear unit with servomotor input adapter.

F 10

	i	J (•10-4) [kgm2]							
			IEC						
			63	71	80	90	100	112	
F 10 2_7.4	7.4	1.0	1.8	1.8	3.8	3.7	4.9	4.9	1.7
F 10 2_8.6	8.6	0.77	1.5	1.5	3.6	3.5	4.7	4.7	1.5
F 10 2_9.8	9.8	0.64	1.4	1.4	3.4	3.3	4.5	4.5	1.3
F 10 2_11.5	11.5	0.48	1.2	1.2	3.3	3.2	4.4	4.4	1.2
F 10 2_13.0	13.0	0.38	1.1	1.1	3.2	3.1	4.3	4.3	1.1
F 10 2_14.6	14.6	0.61	1.4	1.4	3.4	3.3	4.5	4.5	1.3
F 10 2_17.0	17.0	0.48	1.3	1.2	3.3	3.2	4.4	4.4	1.2
F 10 2_19.3	19.3	0.41	1.2	1.2	3.2	3.1	4.3	4.3	1.1
F 10 2_22.8	22.8	0.32	1.1	1.1	3.1	3.0	4.2	4.2	1.0
F 10 2_25.8	25.8	0.25	1.0	1.0	3.1	2.9	4.1	4.1	0.93
F 10 2_29.6	29.6	0.19	1.0	0.95	3.0	2.9	4.1	4.1	0.87
F 10 2_33.0	33.0	0.16	0.93	0.92	3.0	2.8	4.1	4.1	0.84
F 10 2_35.3	35.3	0.14	0.92	0.90	3.0	2.8	4.0	4.0	0.83
F 10 2_39.6	39.6	0.12	0.90	0.88	2.9	2.8	4.0	4.0	0.80
F 10 2_44.7	44.7	0.10	0.88	0.86	2.9	2.8	4.0	4.0	0.79
F 10 2_48.7	48.7	0.09	0.86	0.85	2.9	2.8	4.0	4.0	0.77
F 10 2_56.7	56.7	0.07	0.84	0.83	2.9	2.7	4.0	4.0	0.75
F 10 2_63.0	63.0	0.06	0.83	0.82	2.9	2.7	3.9	3.9	0.74
F 10 2_71.1	71.1	0.05	0.82	0.81	2.8	2.7	3.9	3.9	0.73
F 10 2_81.3	81.3	0.04	0.78	0.77	2.8	2.7	3.9	3.9	0.67
F 10 2_91.5	91.5	0.03	0.78	0.76	2.8	2.7	3.9	3.9	0.66
F 10 2_106.0	106.0	0.03	0.77	0.76	—	—	—	—	0.66
F 10 2_127.1	127.1	0.02	0.76	0.75	—	—	—	—	0.65

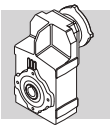

F 10

	i	J (•10-4) [kgm2]									
		SERVO									
		60A		60B 80A		95A		80C 95B 110A		95C 110B	
		SK	SC	SK	SC	SK	SC	SK	SC	SK	SC
F 10 2_7.4	7.4	1.3	1.5	1.3	1.7	3.8	4.3	3.8	4.3	3.7	4.7
F 10 2_8.6	8.6	1.0	1.3	1.1	1.5	3.6	4.0	3.6	4.1	3.5	4.5
F 10 2_9.8	9.8	0.91	1.2	0.93	1.4	3.5	3.9	3.4	3.9	3.3	4.3
F 10 2_11.5	11.5	0.75	1.0	0.77	1.2	3.3	3.7	3.3	3.8	3.2	4.2
F 10 2_13.0	13.0	0.65	0.91	0.67	1.1	3.2	3.6	3.2	3.7	3.1	4.1
F 10 2_14.6	14.6	0.88	1.1	0.91	1.3	3.4	3.9	3.4	3.9	3.3	4.3
F 10 2_17.0	17.0	0.75	1.0	0.77	1.2	3.3	3.7	3.3	3.8	3.2	4.2
F 10 2_19.3	19.3	0.68	0.94	0.70	1.1	3.2	3.7	3.2	3.7	3.1	4.1
F 10 2_22.8	22.8	0.59	0.85	0.61	1.0	3.1	3.6	3.1	3.6	3.0	4.0
F 10 2_25.8	25.8	0.52	0.78	0.54	0.98	3.1	3.5	3.1	3.6	2.9	3.9
F 10 2_29.6	29.6	0.46	0.72	0.48	0.92	3.0	3.4	3.0	3.5	2.9	3.9
F 10 2_33.0	33.0	0.43	0.69	0.45	0.89	3.0	3.4	3.0	3.5	2.8	3.8
F 10 2_35.3	35.3	0.41	0.67	0.43	0.87	3.0	3.4	3.0	3.5	2.8	3.8
F 10 2_39.6	39.6	0.39	0.65	0.41	0.85	2.9	3.3	2.9	3.4	2.8	3.8
F 10 2_44.7	44.7	0.37	0.63	0.39	0.83	2.9	3.4	2.9	3.4	2.8	3.8
F 10 2_48.7	48.7	0.36	0.62	0.38	0.82	2.9	3.3	2.9	3.4	2.8	3.8
F 10 2_56.7	56.7	0.34	0.60	0.36	0.80	2.9	3.3	2.9	3.4	2.7	3.7
F 10 2_63.0	63.0	0.33	0.59	0.35	0.79	2.9	3.3	2.9	3.4	2.7	3.7
F 10 2_71.1	71.1	0.32	0.58	0.34	0.78	2.9	3.3	2.8	3.3	2.7	3.7
F 10 2_81.3	81.3	0.31	0.57	—	—	—	—	2.8	3.3	2.7	3.7
F 10 2_91.5	91.5	0.30	0.56	—	—	—	—	2.8	3.3	2.7	3.7
F 10 2_106.0	106.0	0.30	0.56	—	—	—	—	—	—	—	—
F 10 2_127.1	127.1	0.29	0.55	—	—	—	—	—	—	—	—

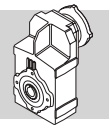

F 20

	i	J (•10-4) [kgm2]							
			IEC						
			63	71	80	90	100	112	
F 20 2_6.4	6.4	2.2	—	—	5.0	4.8	6.0	6.0	3.9
F 20 2_7.8	7.8	1.5	—	—	4.3	4.2	5.4	5.4	3.3
F 20 2_8.7	8.7	1.3	2.0	2.0	4.1	3.9	5.2	5.2	3.0
F 20 2_10.0	10.0	1.0	1.8	1.7	3.8	3.7	4.9	4.9	2.7
F 20 2_11.2	11.2	0.88	1.6	1.6	3.6	3.5	4.7	4.7	2.6
F 20 2_14.8	14.8	1.2	—	—	4.0	3.9	5.1	5.1	2.9
F 20 2_18.1	18.1	0.90	—	—	3.7	3.5	4.7	4.7	2.6
F 20 2_20.2	20.2	0.78	1.5	1.5	3.5	3.4	4.6	4.6	2.5
F 20 2_23.1	23.1	0.64	1.4	1.3	3.4	3.3	4.5	4.5	2.4
F 20 2_25.9	25.9	0.57	1.3	1.3	3.3	3.2	4.4	4.4	2.3
F 20 2_30.4	30.4	0.41	1.1	1.1	3.2	3.0	4.3	4.3	2.1
F 20 2_33.1	33.1	0.36	1.1	1.1	3.1	3.0	4.2	4.2	2.1
F 20 2_37.9	37.9	0.30	1.0	1.0	3.1	2.9	4.1	4.1	2.0
F 20 2_41.8	41.8	0.27	1.0	1.0	3.0	2.9	4.1	4.1	2.0
F 20 2_44.8	44.8	0.24	1.0	1.0	3.0	2.9	4.1	4.1	2.0
F 20 2_50.7	50.7	0.21	0.93	0.92	3.0	2.8	4.1	4.1	1.9
F 20 2_56.7	56.7	0.18	0.91	0.90	2.9	2.8	4.0	4.0	1.9
F 20 2_61.9	61.9	0.16	0.89	0.88	2.9	2.8	4.0	4.0	1.9
F 20 2_69.1	69.1	0.14	0.87	0.86	2.9	2.8	4.0	4.0	1.8
F 20 2_76.8	76.8	0.12	0.86	0.85	2.9	2.8	4.0	4.0	1.8
F 20 2_90.4	90.4	0.10	0.84	0.82	2.9	2.7	3.9	3.9	1.8
F 20 2_101.6	101.6	0.09	0.80	0.79	2.8	2.7	3.9	3.9	1.8
F 20 2_114.3	114.3	0.08	0.79	0.77	2.8	2.7	3.9	3.9	1.8
F 20 2_132.2	132.2	0.03	0.78	0.77	—	—	—	—	1.8
F 20 3_156.3	156.3	0.04	0.81	0.80	2.8	2.7	3.9	3.9	0.72
F 20 3_172.6	172.6	0.04	0.81	0.80	2.8	2.7	3.9	3.9	0.72
F 20 3_184.9	184.9	0.04	0.81	0.80	2.8	2.7	3.9	3.9	0.72
F 20 3_209.3	209.3	0.03	0.81	0.79	2.8	2.7	3.9	3.9	0.72
F 20 3_234.0	234.0	0.03	0.81	0.79	2.8	2.7	3.9	3.9	0.71
F 20 3_255.3	255.3	0.03	0.80	0.79	2.8	2.7	3.9	3.9	0.71
F 20 3_285.2	285.2	0.03	0.80	0.79	2.8	2.7	3.9	3.9	0.71
F 20 3_316.9	316.9	0.03	0.80	0.79	2.8	2.7	3.9	3.9	0.71
F 20 3_372.9	372.9	0.03	0.80	0.79	2.8	2.7	3.9	3.9	0.71
F 20 3_419.3	419.3	0.03	0.80	0.79	2.8	2.7	3.9	3.9	0.66
F 20 3_471.7	471.7	0.03	0.80	0.79	2.8	2.7	3.9	3.9	0.66
F 20 3_545.3	545.3	0.03	0.80	0.79	2.8	2.7	3.9	3.9	0.66

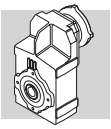

F 20

	i	J (•10-4) [kgm2]									
		SERVO									
		60A		60B 80A		95A		80C 95B 110A		95C 110B	
		SK	SC	SK	SC	SK	SC	SK	SC	SK	SC
F 20 2_6.4	6.4	—	—	—	—	—	—	5.0	5.5	4.8	5.8
F 20 2_7.8	7.8	—	—	—	—	—	—	4.3	4.8	4.2	5.2
F 20 2_8.7	8.7	1.6	1.8	1.6	2.0	4.1	4.6	4.1	4.6	3.9	4.9
F 20 2_10.0	10.0	1.3	1.5	1.3	1.7	3.8	4.3	3.8	4.3	3.7	4.7
F 20 2_11.2	11.2	1.2	1.4	1.2	1.6	3.7	4.1	3.6	4.1	3.5	4.5
F 20 2_14.8	14.8	—	—	—	—	—	—	4.0	4.5	3.9	4.9
F 20 2_18.1	18.1	—	—	—	—	—	—	3.7	4.2	3.5	4.5
F 20 2_20.2	20.2	1.1	1.3	1.1	1.5	3.6	4.0	3.5	4.0	3.4	4.4
F 20 2_23.1	23.1	0.91	1.2	0.93	1.4	3.5	3.9	3.4	3.9	3.3	4.3
F 20 2_25.9	25.9	0.84	1.1	0.86	1.3	3.4	3.8	3.3	3.8	3.2	4.2
F 20 2_30.4	30.4	0.68	0.94	0.70	1.1	3.2	3.7	3.2	3.7	3.0	4.0
F 20 2_33.1	33.1	0.63	0.89	0.65	1.1	3.2	3.6	3.1	3.6	3.0	4.0
F 20 2_37.9	37.9	0.47	0.83	0.59	1.0	3.1	3.6	3.1	3.6	2.9	3.9
F 20 2_41.8	41.8	0.44	0.80	0.56	1.0	3.1	3.5	3.0	3.5	2.9	3.9
F 20 2_44.8	44.8	0.41	0.77	0.53	0.97	3.1	3.5	3.0	3.5	2.9	3.9
F 20 2_50.7	50.7	0.48	0.74	0.50	0.94	3.0	3.5	3.0	3.5	2.8	3.8
F 20 2_56.7	56.7	0.45	0.71	0.47	0.91	3.0	3.4	2.9	3.4	2.8	3.8
F 20 2_61.9	61.9	0.43	0.69	0.45	0.89	3.0	3.4	2.9	3.4	2.8	3.8
F 20 2_69.1	69.1	0.41	0.67	0.43	0.87	3.0	3.4	2.9	3.4	2.8	3.8
F 20 2_76.8	76.8	0.39	0.65	0.41	0.85	2.9	3.4	2.9	3.4	2.8	3.8
F 20 2_90.4	90.4	0.37	0.63	0.39	0.83	2.9	3.4	2.9	3.4	2.7	3.7
F 20 2_101.6	101.6	0.36	0.62	—	—	—	—	2.8	3.3	2.7	3.7
F 20 2_114.3	114.3	0.35	0.61	—	—	—	—	2.8	3.3	2.7	3.7
F 20 2_132.2	132.2	0.30	0.56	—	—	—	—	—	—	—	—
F 20 3_156.3	156.3	0.31	0.57	0.33	0.77	2.9	3.3	2.8	3.3	2.7	3.7
F 20 3_172.6	172.6	0.31	0.57	0.33	0.77	2.9	3.3	2.8	3.3	2.7	3.7
F 20 3_184.9	184.9	0.31	0.57	0.33	0.77	2.9	3.3	2.8	3.3	2.7	3.7
F 20 3_209.3	209.3	0.30	0.56	0.32	0.76	2.9	3.3	2.8	3.3	2.7	3.7
F 20 3_234.0	234.0	0.30	0.56	0.32	0.76	2.9	3.3	2.8	3.3	2.7	3.7
F 20 3_255.3	255.3	0.30	0.56	0.32	0.76	2.9	3.3	2.8	3.3	2.7	3.7
F 20 3_285.2	285.2	0.30	0.56	0.32	0.76	2.9	3.3	2.8	3.3	2.7	3.7
F 20 3_316.9	316.9	0.30	0.56	0.32	0.76	2.9	3.3	2.8	3.3	2.7	3.7
F 20 3_372.9	372.9	0.30	0.56	0.32	0.76	2.9	3.3	2.8	3.3	2.7	3.7
F 20 3_419.3	419.3	0.30	0.56	0.32	0.76	2.9	3.3	2.8	3.3	2.7	3.7
F 20 3_471.7	471.7	0.30	0.56	0.32	0.76	2.9	3.3	2.8	3.3	2.7	3.7
F 20 3_545.3	545.3	0.30	0.56	0.32	0.76	2.9	3.3	2.8	3.3	2.7	3.7

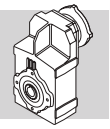

F 25

	i	J (•10-4) [kgm2]							
			IEC						
			63	71	80	90	100	112	
F 25 2_6.9	6.9	2.7	—	—	5.4	5.3	6.5	6.5	4.4
F 25 2_8.4	8.4	1.9	—	—	4.6	4.5	5.7	5.7	3.6
F 25 2_9.4	9.4	1.6	2.3	2.3	4.3	4.2	5.4	5.4	3.3
F 25 2_10.6	10.6	1.9	—	—	4.6	4.5	5.7	5.7	3.6
F 25 2_13.0	13.0	1.3	—	—	4.1	4.0	5.2	5.2	3.0
F 25 2_14.5	14.5	1.1	1.8	1.8	3.9	3.8	5.0	5.0	2.8
F 25 2_16.6	16.6	0.90	1.6	1.6	3.7	3.5	4.7	4.7	2.6
F 25 2_18.6	18.6	0.77	1.5	1.5	3.5	3.4	4.6	4.6	2.5
F 25 2_21.8	21.8	0.57	1.3	1.3	3.3	3.2	4.4	4.4	2.3
F 25 2_23.8	23.8	0.48	1.2	1.2	3.2	3.1	4.3	4.3	2.2
F 25 2_27.2	27.2	0.40	1.1	1.1	3.2	3.0	4.2	4.2	2.1
F 25 2_30.0	30.0	0.35	1.1	1.1	3.1	3.0	4.2	4.2	2.1
F 25 2_32.2	32.2	0.31	1.0	1.0	3.1	2.9	4.2	4.2	2.0
F 25 2_36.4	36.4	0.26	1.0	1.0	3.0	2.9	4.1	4.1	2.0
F 25 2_40.7	40.7	0.22	1.0	0.94	3.0	2.9	4.1	4.1	1.9
F 25 2_44.4	44.4	0.20	0.93	0.92	3.0	2.8	4.0	4.0	1.9
F 25 3_45.6	45.6	0.79	—	—	3.6	3.4	4.6	4.6	2.5
F 25 3_50.8	50.8	0.70	1.4	1.4	3.5	3.3	4.5	4.5	2.4
F 25 3_58.3	58.3	0.58	1.3	1.3	3.3	3.2	4.4	4.4	2.3
F 25 3_65.3	65.3	0.52	1.2	1.2	3.3	3.1	4.4	4.4	2.2
F 25 3_76.6	76.6	0.38	1.1	1.1	3.1	3.0	4.2	4.2	2.1
F 25 3_83.4	83.4	0.32	1.0	1.0	3.1	3.0	4.2	4.2	2.0
F 25 3_95.5	95.5	0.28	1.0	1.0	3.0	2.9	4.1	4.1	2.0
F 25 3_105.4	105.4	0.25	1.0	1.0	3.0	2.9	4.1	4.1	2.0
F 25 3_113.0	113.0	0.23	0.95	0.94	3.0	2.9	4.1	4.1	1.9
F 25 3_127.8	127.8	0.20	0.92	0.91	3.0	2.8	4.0	4.0	1.9
F 25 3_143.0	143.0	0.17	0.90	0.89	2.9	2.8	4.0	4.0	1.9
F 25 3_155.9	155.9	0.15	0.88	0.87	2.9	2.8	4.0	4.0	1.9
F 25 3_174.2	174.2	0.13	0.87	0.86	2.9	2.8	4.0	4.0	1.8
F 25 3_193.6	193.6	0.12	0.85	0.84	2.9	2.7	4.0	4.0	1.8
F 25 3_227.8	227.8	0.10	0.83	0.82	2.9	2.7	3.9	3.9	1.8
F 25 3_256.1	256.1	0.09	0.79	0.78	2.8	2.7	3.9	3.9	1.8
F 25 3_288.1	288.1	0.08	0.78	0.77	2.8	2.7	3.9	3.9	1.8
F 25 3_333.1	333.1	0.03	0.78	0.76	—	—	—	—	1.8
F 25 4_393.9	393.9	0.02	0.80	0.78	2.8	2.7	3.9	3.9	0.70
F 25 4_434.9	434.9	0.02	0.79	0.78	2.8	2.7	3.9	3.9	0.70
F 25 4_466.0	466.0	0.02	0.79	0.78	2.8	2.7	3.9	3.9	0.70
F 25 4_527.3	527.3	0.02	0.79	0.78	2.8	2.7	3.9	3.9	0.70
F 25 4_589.7	589.7	0.02	0.79	0.78	2.8	2.7	3.9	3.9	0.70
F 25 4_643.3	643.3	0.02	0.79	0.78	2.8	2.7	3.9	3.9	0.70
F 25 4_718.7	718.7	0.02	0.79	0.78	2.8	2.7	3.9	3.9	0.70
F 25 4_798.5	798.5	0.01	0.79	0.77	2.8	2.7	3.9	3.9	0.70
F 25 4_939.8	939.8	0.01	0.79	0.77	2.8	2.7	3.9	3.9	0.69
F 25 4_1057	1057	0.01	0.79	0.77	2.8	2.7	3.9	3.9	0.64
F 25 4_1189	1189	0.01	0.78	0.77	2.8	2.7	3.9	3.9	0.64
F 25 4_1374	1374	0.01	0.78	0.77	2.8	2.7	3.9	3.9	0.64

Bonfiglioli Riduttori

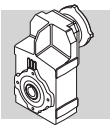

F 25

	i	J (•10-4) [kgm2]									
		SERVO									
		60A		60B 80A		95A		80C 95B 110A		95C 110B	
		SK	SC	SK	SC	SK	SC	SK	SC	SK	SC
F 25 2_6.9	6.9	—	—	—	—	—	—	5.4	5.9	5.3	6.3
F 25 2_8.4	8.4	—	—	—	—	—	—	4.6	5.1	4.5	5.5
F 25 2_9.4	9.4	1.9	2.1	1.9	2.3	4.4	4.9	4.3	4.8	4.2	5.2
F 25 2_10.6	10.6	—	—	—	—	—	—	4.6	5.1	4.5	5.5
F 25 2_13.0	13.0	—	—	—	—	—	—	4.1	4.6	4.0	5.0
F 25 2_14.5	14.5	1.4	1.6	1.4	1.8	3.9	4.4	3.9	4.4	3.8	4.8
F 25 2_16.6	16.6	1.2	1.4	1.2	1.6	3.7	4.2	3.7	4.2	3.5	4.5
F 25 2_18.6	18.6	1.0	1.3	1.1	1.5	3.6	4.0	3.5	4.0	3.4	4.4
F 25 2_21.8	21.8	0.84	1.1	0.86	1.3	3.4	3.8	3.3	3.8	3.2	4.2
F 25 2_23.8	23.8	0.75	1.0	0.77	1.2	3.3	3.7	3.2	3.7	3.1	4.1
F 25 2_27.2	27.2	0.67	0.93	0.69	1.1	3.2	3.7	3.2	3.7	3.0	4.0
F 25 2_30.0	30.0	0.62	0.88	0.64	1.1	3.2	3.6	3.1	3.6	3.0	4.0
F 25 2_32.2	32.2	0.58	0.84	1.4	1.8	3.1	3.6	3.1	3.6	2.9	3.9
F 25 2_36.4	36.4	0.53	0.79	0.55	0.99	3.1	3.5	3.0	3.5	2.9	3.9
F 25 2_40.7	40.7	0.49	0.75	0.51	0.95	3.0	3.5	3.0	3.5	2.9	3.9
F 25 2_44.4	44.4	0.47	0.73	0.49	0.93	3.0	3.5	3.0	3.5	2.8	3.8
F 25 3_45.6	45.6	1.1	1.3	1.1	1.5	3.6	4.0	3.6	4.1	3.4	4.4
F 25 3_50.8	50.8	0.97	1.2	0.99	1.4	3.5	4.0	3.5	4.0	3.3	4.3
F 25 3_58.3	58.3	0.85	1.1	0.87	1.3	3.4	3.8	3.3	3.8	3.2	4.2
F 25 3_65.3	65.3	0.79	1.1	0.84	1.2	3.3	3.8	3.3	3.8	3.1	4.1
F 25 3_76.6	76.6	0.65	0.91	0.67	1.1	3.2	3.6	3.1	3.6	3.0	4.0
F 25 3_83.4	83.4	0.59	0.85	0.61	1.0	3.1	3.6	3.1	3.6	3.0	4.0
F 25 3_95.5	95.5	0.55	0.81	0.57	1.0	3.1	3.5	3.0	3.5	2.9	3.9
F 25 3_105.4	105.4	0.52	0.78	0.54	0.98	3.1	3.5	3.0	3.5	2.9	3.9
F 25 3_113.0	113.0	0.50	0.76	0.52	0.96	3.1	3.5	3.0	3.5	2.9	3.9
F 25 3_127.8	127.8	0.47	0.73	0.49	0.93	3.0	3.5	3.0	3.5	2.8	3.8
F 25 3_143.0	143.0	0.44	0.70	0.46	0.90	3.0	3.4	2.9	3.4	2.8	3.8
F 25 3_155.9	155.9	0.42	0.68	0.44	0.88	3.0	3.4	2.9	3.4	2.8	3.8
F 25 3_174.2	174.2	0.40	0.66	0.42	0.86	3.0	3.4	2.9	3.4	2.8	3.8
F 25 3_193.6	193.6	0.39	0.65	0.41	0.85	2.9	3.4	2.9	3.4	2.7	3.7
F 25 3_227.8	227.8	0.37	0.63	0.39	0.83	2.9	3.4	2.9	3.4	2.7	3.7
F 25 3_256.1	256.1	0.36	0.62	—	—	—	—	2.8	3.3	2.7	3.7
F 25 3_288.1	288.1	0.35	0.61	—	—	—	—	2.8	3.3	2.7	3.7
F 25 3_333.1	333.1	0.30	0.56	—	—	—	—	—	—	—	—
F 25 4_393.9	393.9	0.29	0.55	0.31	0.75	2.8	3.3	2.8	3.3	2.7	3.7
F 25 4_434.9	434.9	0.29	0.55	0.31	0.75	2.8	3.3	2.8	3.3	2.7	3.7
F 25 4_466.0	466.0	0.29	0.55	0.31	0.75	2.8	3.3	2.8	3.3	2.7	3.7
F 25 4_527.3	527.3	0.29	0.55	0.31	0.75	2.8	3.3	2.8	3.3	2.7	3.7
F 25 4_589.7	589.7	0.29	0.55	0.31	0.75	2.8	3.3	2.8	3.3	2.7	3.7
F 25 4_643.3	643.3	0.29	0.55	0.31	0.75	2.8	3.3	2.8	3.3	2.7	3.7
F 25 4_718.7	718.7	0.29	0.55	0.31	0.75	2.8	3.3	2.8	3.3	2.7	3.7
F 25 4_798.5	798.5	0.28	0.54	0.30	0.74	2.8	3.3	2.8	3.3	2.7	3.7
F 25 4_939.8	939.8	0.28	0.54	0.30	0.74	2.8	3.3	2.8	3.3	2.7	3.7
F 25 4_1057	1057	0.28	0.54	0.30	0.74	2.8	3.3	2.8	3.3	2.7	3.7
F 25 4_1189	1189	0.28	0.54	0.30	0.74	2.8	3.3	2.8	3.3	2.7	3.7
F 25 4_1374	1374	0.28	0.54	0.30	0.74	2.8	3.3	2.8	3.3	2.7	3.7

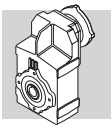

F 31

	i	J (•10-4) [kgm2]								
			63	71	80	90	100	112	132	
F 31 2_6.9	6.9	5.0	—	—	7.8	7.6	8.9	8.9	22	7.1
F 31 2_8.2	8.2	3.7	—	—	6.5	6.3	7.5	7.5	20	5.8
F 31 2_9.0	9.0	3.2	—	—	6.0	5.8	7.0	7.0	20	5.3
F 31 2_10.7	10.7	3.5	—	—	6.3	6.2	7.4	7.4	20	5.6
F 31 2_12.7	12.7	2.6	—	—	5.4	5.3	6.5	6.5	19	4.7
F 31 2_13.9	13.9	2.3	—	—	5.1	4.9	6.2	6.2	19	4.4
F 31 2_16.8	16.8	1.8	—	—	4.6	4.4	5.6	5.6	18	3.9
F 31 2_18.5	18.5	1.5	2.2	2.2	4.2	4.1	5.3	5.3	18	3.5
F 31 2_21.1	21.1	1.1	1.8	1.8	3.9	3.7	5.0	5.0	18	3.2
F 31 2_23.4	23.4	1.0	1.7	1.7	3.7	3.6	4.8	4.8	18	3.0
F 31 2_27.3	27.3	0.78	1.5	1.5	3.5	3.4	4.6	4.6	17	2.8
F 31 2_30.1	30.1	0.65	1.4	1.4	3.4	3.3	4.5	4.5	17	2.7
F 31 2_34.4	34.4	0.53	1.3	1.2	3.3	3.2	4.4	4.4	17	2.6
F 31 2_37.7	37.7	0.47	1.2	1.2	3.2	3.1	4.3	4.3	17	2.5
F 31 2_40.4	40.4	0.42	1.1	1.1	3.2	3.0	4.3	4.3	—	2.5
F 31 2_44.6	44.6	0.37	1.1	1.1	3.1	3.0	4.2	4.2	—	2.4
F 31 3_47.5	47.5	1.6	—	—	4.3	4.2	5.4	5.4	18	3.6
F 31 3_52.1	52.1	1.4	—	—	4.2	4.0	5.3	5.3	18	3.5
F 31 3_62.8	62.8	1.2	—	—	3.9	3.8	5.0	5.0	18	3.2
F 31 3_69.1	69.1	1.0	1.7	1.7	3.7	3.6	4.8	4.8	18	3.0
F 31 3_78.9	78.9	0.72	1.4	1.4	3.5	3.4	4.6	4.6	17	2.8
F 31 3_87.4	87.4	0.66	1.4	1.4	3.4	3.3	4.5	4.5	17	2.7
F 31 3_101.9	101.9	0.54	1.3	1.2	3.3	3.2	4.4	4.4	17	2.6
F 31 3_112.5	112.5	0.46	1.2	1.2	3.2	3.1	4.3	4.3	17	2.5
F 31 3_128.4	128.4	0.38	1.1	1.1	3.1	3.0	4.2	4.2	17	2.4
F 31 3_140.7	140.7	0.35	1.1	1.1	3.1	3.0	4.2	4.2	17	2.4
F 31 3_150.8	150.8	0.31	1.0	1.0	3.1	2.9	4.2	4.2	—	2.4
F 31 3_166.8	166.8	0.28	1.0	1.0	3.0	2.9	4.1	4.1	—	2.3
F 31 3_185.4	185.4	0.24	1.0	1.0	3.0	2.9	4.1	4.1	—	2.3
F 31 3_202.3	202.3	0.21	0.94	0.93	3.0	2.8	4.1	4.1	—	2.3
F 31 3_228.2	228.2	0.18	0.92	0.90	2.9	2.8	4.0	4.0	—	2.2
F 31 3_253.6	253.6	0.16	0.89	0.88	2.9	2.8	4.0	4.0	—	2.2
F 31 3_293.8	293.8	0.13	0.86	0.85	2.9	2.8	4.0	4.0	—	2.2
F 31 3_332.8	332.8	0.11	0.82	0.81	2.9	2.7	4.0	4.0	—	2.2
F 31 3_374.4	374.4	0.10	0.81	0.79	2.9	2.7	3.9	3.9	—	2.2
F 31 4_418.9	418.9	0.09	0.86	0.85	2.9	2.8	3.9	3.9	—	0.77
F 31 4_462.6	462.6	0.08	0.86	0.84	2.9	2.7	3.9	3.9	—	0.77
F 31 4_527.8	527.8	0.08	0.85	0.84	2.9	2.7	3.9	3.9	—	0.76
F 31 4_578.6	578.6	0.08	0.85	0.84	2.9	2.7	3.9	3.9	—	0.76
F 31 4_619.9	619.9	0.07	0.85	0.83	2.9	2.7	3.9	3.9	—	0.76
F 31 4_685.6	685.6	0.07	0.85	0.83	2.9	2.7	3.9	3.9	—	0.76
F 31 4_762.3	762.3	0.07	0.84	0.83	2.9	2.7	3.9	3.9	—	0.75
F 31 4_831.6	831.6	0.07	0.84	0.83	2.9	2.7	3.9	3.9	—	0.75
F 31 4_938.2	938.2	0.07	0.84	0.83	2.9	2.7	3.9	3.9	—	0.75
F 31 4_1042	1042	0.07	0.84	0.83	2.9	2.7	3.9	3.9	—	0.75
F 31 4_1208	1208	0.06	0.84	0.82	2.9	2.7	3.9	3.9	—	0.75
F 31 4_1368	1368	0.06	0.84	0.82	2.9	2.7	3.9	3.9	—	0.75
F 31 4_1539	1539	0.06	0.84	0.82	2.9	2.7	3.9	3.9	—	0.75

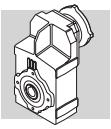

F 31

	i	J (•10-4) [kgm2]											
		SERVO											
		60A		60B 80A		95A		80C 95B 110A		95C 110B		130A	
		SK	SC	SK	SC	SK	SC	SK	SC	SK	SC	SK	SC
F 31 2_6.9	6.9	—	—	—	—	—	—	7.8	8.3	7.6	8.6	7.6	8.6
F 31 2_8.2	8.2	—	—	—	—	—	—	6.5	7.0	6.3	7.3	6.3	7.3
F 31 2_9.0	9.0	—	—	—	—	—	—	6.0	6.5	5.8	6.8	5.8	6.8
F 31 2_10.7	10.7	—	—	—	—	—	—	6.3	6.8	6.2	7.2	6.2	7.2
F 31 2_12.7	12.7	—	—	—	—	—	—	5.4	5.9	5.3	6.3	5.3	6.3
F 31 2_13.9	13.9	—	—	—	—	—	—	5.1	5.6	4.9	5.9	4.9	5.9
F 31 2_16.8	16.8	—	—	—	—	—	—	4.6	5.1	4.4	5.4	4.4	5.4
F 31 2_18.5	18.5	1.8	2.0	1.8	2.2	4.3	4.8	4.2	4.7	4.1	5.1	4.1	5.1
F 31 2_21.1	21.1	1.4	1.6	1.4	1.8	3.9	4.3	3.9	4.4	3.7	4.7	3.7	4.7
F 31 2_23.4	23.4	1.3	1.5	1.3	1.7	3.8	4.3	3.7	4.2	3.6	4.6	3.6	4.6
F 31 2_27.3	27.3	1.1	1.3	1.1	1.5	3.6	4.0	3.5	4.0	3.4	4.4	3.4	4.4
F 31 2_30.1	30.1	0.92	1.2	0.94	1.4	3.5	3.9	3.4	3.9	3.3	4.3	3.3	4.3
F 31 2_34.4	34.4	0.80	1.1	0.82	1.3	3.4	3.8	3.3	3.8	3.2	4.2	3.2	4.2
F 31 2_37.7	37.7	0.74	1.0	0.76	1.2	3.3	3.7	3.2	3.7	3.1	4.1	3.1	4.1
F 31 2_40.4	40.4	0.69	0.95	0.71	1.1	3.2	3.7	3.2	3.7	3.0	4.0	3.0	4.0
F 31 2_44.6	44.6	0.64	0.90	0.66	1.1	3.2	3.6	3.1	3.6	3.0	4.0	3.0	4.0
F 31 3_47.5	47.5	—	—	—	—	—	—	4.3	4.8	4.2	5.2	4.2	5.2
F 31 3_52.1	52.1	—	—	—	—	—	—	4.2	4.7	4.0	5.0	4.0	5.0
F 31 3_62.8	62.8	—	—	—	—	—	—	3.9	4.4	3.8	4.8	3.8	4.8
F 31 3_69.1	69.1	1.3	1.5	1.3	1.7	3.8	4.3	3.7	4.2	3.6	4.6	3.6	4.6
F 31 3_78.9	78.9	0.99	1.3	1.0	1.4	3.5	4.0	3.5	4.0	3.4	4.4	3.4	4.4
F 31 3_87.4	87.4	0.93	1.2	0.95	1.4	3.5	3.9	3.4	3.9	3.3	4.3	3.3	4.3
F 31 3_101.9	101.9	0.81	1.1	0.83	1.3	3.4	3.8	3.3	3.8	3.2	4.2	3.2	4.2
F 31 3_112.5	112.5	0.73	0.99	0.75	1.2	3.3	3.7	3.2	3.7	3.1	4.1	3.1	4.1
F 31 3_128.4	128.4	0.65	0.91	0.67	1.1	3.2	3.6	3.1	3.6	3.0	4.0	3.0	4.0
F 31 3_140.7	140.7	0.62	0.88	0.64	1.1	3.2	3.6	3.1	3.6	3.0	4.0	3.0	4.0
F 31 3_150.8	150.8	0.58	0.84	0.60	1.0	3.1	3.6	3.1	3.6	2.9	3.9	2.9	3.9
F 31 3_166.8	166.8	0.55	0.81	0.57	1.0	3.1	3.5	3.0	3.5	2.9	3.9	2.9	3.9
F 31 3_185.4	185.4	0.51	0.77	0.53	0.97	3.1	3.5	3.0	3.5	2.9	3.9	2.9	3.9
F 31 3_202.3	202.3	0.48	0.74	0.50	0.93	3.0	3.5	3.0	3.5	2.8	3.8	2.8	3.8
F 31 3_228.2	228.2	0.45	0.71	0.47	0.91	3.0	3.4	2.9	3.4	2.8	3.8	2.8	3.8
F 31 3_253.6	253.6	0.43	0.69	0.45	0.89	3.0	3.4	2.9	3.4	2.8	3.8	2.8	3.8
F 31 3_293.8	293.8	0.40	0.66	0.42	0.86	3.0	3.4	2.9	3.4	2.8	3.8	2.8	3.8
F 31 3_332.8	332.8	0.38	0.64	—	—	—	—	2.9	3.4	2.7	3.7	2.7	3.7
F 31 3_374.4	374.4	0.37	0.63	—	—	—	—	2.9	3.4	2.7	3.7	2.7	3.7
F 31 4_418.9	418.9	0.36	0.62	0.38	0.82	2.9	3.3	2.9	3.4	2.8	3.8	—	—
F 31 4_462.6	462.6	0.35	0.61	0.37	0.81	2.9	3.3	2.9	3.4	2.7	3.7	—	—
F 31 4_527.8	527.8	0.35	0.61	0.37	0.81	2.9	3.3	2.9	3.4	2.7	3.7	—	—
F 31 4_578.6	578.6	0.35	0.61	0.37	0.81	2.9	3.3	2.9	3.4	2.7	3.7	—	—
F 31 4_619.9	619.9	0.34	0.60	0.36	0.80	2.9	3.3	2.9	3.4	2.7	3.7	—	—
F 31 4_685.6	685.6	0.34	0.60	0.36	0.80	2.9	3.3	2.9	3.4	2.7	3.7	—	—
F 31 4_762.3	762.3	0.34	0.60	0.36	0.80	2.9	3.3	2.9	3.4	2.7	3.7	—	—
F 31 4_831.6	831.6	0.34	0.60	0.36	0.80	2.9	3.3	2.9	3.4	2.7	3.7	—	—
F 31 4_938.2	938.2	0.34	0.60	0.36	0.80	2.9	3.3	2.9	3.4	2.7	3.7	—	—
F 31 4_1042	1042	0.34	0.60	0.36	0.80	2.9	3.3	2.9	3.4	2.7	3.7	—	—
F 31 4_1208	1208	0.33	0.59	0.35	0.79	2.9	3.3	2.9	3.4	2.7	3.7	—	—
F 31 4_1368	1368	0.33	0.59	0.35	0.79	2.9	3.3	2.9	3.4	2.7	3.7	—	—
F 31 4_1539	1539	0.83	0.59	0.35	0.79	2.9	3.3	2.9	3.4	2.7	3.7	—	—

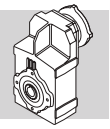

F 41

	i	J (•10-4) [kgm2]								
			63	71	80	90	100	112	132	
F 41 2_6.7	6.7	12	—	—	15	15	18	18	29	21
F 41 2_9.1	9.1	7.2	—	—	10	9.8	13	13	24	16
F 41 2_10.8	10.8	8.0	—	—	11	11	13	13	25	17
F 41 2_14.6	14.6	5.0	—	—	7.7	7.6	10	10	21	14
F 41 2_17.1	17.1	3.5	—	—	6.3	6.2	8.9	8.9	20	12
F 41 2_18.9	18.9	3.1	—	—	5.8	5.7	8.5	8.5	20	12
F 41 2_24.1	24.1	2.1	2.8	2.8	4.9	4.8	7.5	7.5	19	11
F 41 2_30.1	30.1	1.5	2.2	2.2	4.3	4.2	6.9	6.9	18	10
F 41 2_38.2	38.2	0.95	1.7	1.7	3.7	3.6	6.3	6.3	17	9.7
F 41 2_47.9	47.9	0.67	1.4	1.4	3.4	3.3	6.0	6.0	17	9.5
F 41 3_51.5	51.5	3.0	—	—	5.7	5.6	8.4	8.4	19	12
F 41 3_60.2	60.2	2.1	—	—	4.9	4.7	7.5	7.5	19	11
F 41 3_66.5	66.5	1.9	—	—	4.7	4.5	7.3	7.3	18	11
F 41 3_84.9	84.9	1.4	2.1	2.1	4.2	4.0	6.8	6.8	18	10
F 41 3_106.0	106.0	1.1	1.8	1.7	3.8	3.7	6.4	6.4	18	9.8
F 41 3_134.4	134.4	0.66	1.4	1.4	3.4	3.3	6.0	6.0	17	9.4
F 41 3_168.7	168.7	0.49	1.2	1.2	3.2	3.1	5.9	5.9	17	9.3
F 41 3_180.7	180.7	0.43	1.1	1.1	3.2	3.1	5.8	5.8	—	9.2
F 41 3_198.9	198.9	0.39	1.1	1.1	3.1	3.0	5.8	5.8	—	9.2
F 41 3_220.1	220.1	0.36	1.1	1.1	3.1	3.0	5.7	5.7	—	9.1
F 41 3_240.1	240.1	0.31	1.0	1.0	3.1	2.9	5.7	5.7	—	9.1
F 41 3_266.9	266.9	0.28	1.0	1.0	3.0	2.9	5.7	5.7	—	9.1
F 41 3_296.6	296.6	0.23	1.0	1.0	3.0	2.9	5.6	5.6	—	9.0
F 41 3_344.8	344.8	0.19	0.92	0.91	2.9	2.8	5.6	5.6	—	9.0
F 41 4_433.7	433.7	0.21	0.94	0.93	3.0	2.8	4.1	4.1	—	1.9
F 41 4_549.8	549.8	0.19	0.92	0.90	2.9	2.8	4.0	4.0	—	1.9
F 41 4_690.1	690.1	0.18	0.91	0.89	2.9	2.8	4.0	4.0	—	1.9
F 41 4_739.4	739.4	0.17	0.90	0.89	2.9	2.8	4.0	4.0	—	1.9
F 41 4_813.8	813.8	0.17	0.90	0.89	2.9	2.8	4.0	4.0	—	1.9
F 41 4_900.5	900.5	0.17	0.90	0.89	2.9	2.8	4.0	4.0	—	1.9
F 41 4_982.4	982.4	0.17	0.90	0.88	2.9	2.8	4.0	4.0	—	1.9
F 41 4_1092	1092	0.16	0.89	0.88	2.9	2.8	4.0	4.0	—	1.9
F 41 4_1213	1213	0.16	0.89	0.88	2.9	2.8	4.0	4.0	—	1.9
F 41 4_1411	1411	0.16	0.89	0.88	2.9	2.8	4.0	4.0	—	1.9

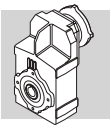

F 41

	i	J (•10-4) [kgm2]																	
		SERVO																	
		60A		60B 80A		80B		95A		80C 95B 110A		95C 110B		130A		130B 180A		180B	
		SK	SC	SK	SC	SK	SC	SK	SC	SK	SC	SK	SC	SK	SC	SK	SC	SK	SC
F 41 2_6.7	6.7	—	—	—	—	—	—	—	—	15	16	15	16	15	16	29	31	29	34
F 41 2_9.1	9.1	—	—	—	—	—	—	—	—	10	11	9.8	11	9.8	11	24	27	24	29
F 41 2_10.8	10.8	—	—	—	—	—	—	—	—	11	12	11	12	11	12	25	27	25	30
F 41 2_14.6	14.6	—	—	—	—	—	—	—	—	7.7	8.2	7.6	8.6	7.6	8.6	22	24	21	26
F 41 2_17.1	17.1	—	—	—	—	—	—	—	—	6.3	6.8	6.2	7.2	6.2	7.2	20	23	20	25
F 41 2_18.9	18.9	—	—	—	—	—	—	—	—	5.8	6.3	5.7	6.7	5.7	6.7	20	23	20	25
F 41 2_24.1	24.1	—	—	—	—	4.9	5.4	4.9	5.4	4.9	5.4	4.8	5.8	4.8	5.8	19	22	19	24
F 41 2_30.1	30.1	—	—	—	—	4.3	4.8	4.3	4.8	4.3	4.8	4.2	5.2	4.2	5.2	18	21	18	23
F 41 2_38.2	38.2	—	—	—	—	3.8	4.2	3.8	4.2	3.7	4.2	3.6	4.6	3.6	4.6	18	20	17	22
F 41 2_47.9	47.9	—	—	—	—	3.5	3.9	3.5	3.9	3.4	3.9	3.3	4.3	3.3	4.3	18	20	17	22
F 41 3_51.5	51.5	—	—	—	—	—	—	—	—	5.7	6.2	5.6	6.6	5.6	6.6	20	22	19	24
F 41 3_60.2	60.2	—	—	—	—	—	—	—	—	4.9	5.4	4.7	5.7	4.7	5.7	19	22	19	24
F 41 3_66.5	66.5	—	—	—	—	—	—	—	—	4.7	5.2	4.5	5.5	4.5	5.5	19	21	18	23
F 41 3_84.9	84.9	—	—	—	—	4.2	4.7	4.2	4.7	4.2	4.7	4.0	5.0	4.0	5.0	18	21	18	23
F 41 3_106.0	106.0	—	—	—	—	3.9	4.4	3.9	4.4	3.8	4.3	3.7	4.7	3.7	4.7	18	21	18	23
F 41 3_134.4	134.4	—	—	—	—	3.5	3.9	3.5	3.9	3.4	3.9	3.3	4.3	3.3	4.3	18	20	17	22
F 41 3_168.7	168.7	—	—	—	—	3.3	3.7	3.3	3.7	3.2	3.7	3.1	4.1	3.1	4.1	17	20	17	22
F 41 3_180.7	180.7	—	—	—	—	3.3	3.7	3.3	3.7	3.2	3.7	3.1	4.1	3.1	4.1	—	—	—	—
F 41 3_198.9	198.9	—	—	—	—	3.2	3.6	3.2	3.6	3.1	3.6	3.0	4.0	3.0	4.0	—	—	—	—
F 41 3_220.1	220.1	—	—	—	—	3.2	3.6	3.2	3.6	3.1	3.6	3.0	4.0	3.0	4.0	—	—	—	—
F 41 3_240.1	240.1	—	—	—	—	3.1	3.6	3.1	3.6	3.1	3.6	2.9	3.9	2.9	3.9	—	—	—	—
F 41 3_266.9	266.9	—	—	—	—	3.1	3.5	3.1	3.5	3.0	3.5	2.9	3.9	2.9	3.9	—	—	—	—
F 41 3_296.6	296.6	—	—	—	—	3.1	3.5	3.1	3.5	3.0	3.5	2.9	3.9	2.9	3.9	—	—	—	—
F 41 3_344.8	344.8	—	—	—	—	3.0	3.4	3.0	3.4	2.9	3.4	2.8	3.8	2.8	3.8	—	—	—	—
F 41 4_433.7	433.7	0.48	0.74	0.50	0.94	—	—	3.0	3.5	3.0	3.5	2.8	3.8	—	—	—	—	—	—
F 41 4_549.8	549.8	0.46	0.72	0.48	0.92	—	—	3.0	3.4	2.9	3.4	2.8	3.8	—	—	—	—	—	—
F 41 4_690.1	690.1	0.45	0.71	0.47	0.91	—	—	3.0	3.4	2.9	3.4	2.8	3.8	—	—	—	—	—	—
F 41 4_739.4	739.4	0.44	0.70	0.46	0.90	—	—	3.0	3.4	2.9	3.4	2.8	3.8	—	—	—	—	—	—
F 41 4_813.8	813.8	0.44	0.70	0.46	0.90	—	—	3.0	3.4	2.9	3.4	2.8	3.8	—	—	—	—	—	—
F 41 4_900.5	900.5	0.44	0.70	0.46	0.90	—	—	3.0	3.4	2.9	3.4	2.8	3.8	—	—	—	—	—	—
F 41 4_982.4	982.4	0.44	0.70	0.46	0.90	—	—	3.0	3.4	2.9	3.4	2.8	3.8	—	—	—	—	—	—
F 41 4_1092	1092	0.43	0.69	0.45	0.89	—	—	3.0	3.4	2.9	3.4	2.8	3.8	—	—	—	—	—	—
F 41 4_1213	1213	0.43	0.69	0.45	0.89	—	—	3.0	3.4	2.9	3.4	2.8	3.8	—	—	—	—	—	—
F 41 4_1411	1411	0.43	0.69	0.45	0.89	—	—	3.0	3.4	2.9	3.4	2.8	3.8	—	—	—	—	—	—

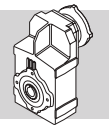

F 51

	i	J (•10-4) [kgm2]										
			63	71	80	90	100	112	132	160	180	
F 51 2_7.2	7.2	25	—	—	28	28	30	30	42	101	103	34
F 51 2_9.1	9.1	17	—	—	20	19	22	22	33	92	94	26
F 51 2_11.1	11.1	16	—	—	19	19	22	22	33	92	94	25
F 51 2_14.0	14.0	11	—	—	14	14	17	17	28	87	89	20
F 51 2_18.8	18.8	7.0	—	—	9.8	9.6	12	12	24	83	85	16
F 51 2_23.8	23.8	4.5	—	—	7.3	7.2	9.9	9.9	21	80	82	13
F 51 2_30.0	30.0	3.1	3.8	3.8	5.9	5.8	8.5	8.5	20	79	81	12
F 51 2_37.1	37.1	2.2	3.0	3.0	5.0	4.9	7.6	7.6	19	78	80	11
F 51 3_48.9	48.9	6.2	—	—	8.9	8.8	12	12	23	82	84	15
F 51 3_65.8	65.8	4.2	—	—	6.9	6.8	9.6	9.6	21	80	82	13
F 51 3_83.2	83.2	2.7	—	—	5.5	5.4	8.1	8.1	19	78	80	12
F 51 3_105.1	105.1	2.0	2.7	2.7	4.8	4.6	7.4	7.4	19	78	80	11
F 51 3_129.9	129.9	1.5	2.2	2.2	4.3	4.1	6.9	6.9	18	77	79	10
F 51 3_165.6	165.6	0.95	1.7	1.7	3.7	3.6	6.3	6.3	17	76	78	9.7
F 51 3_202.4	202.4	0.72	1.4	1.4	3.5	3.3	6.1	6.1	17	76	78	9.5
F 51 3_216.9	216.9	0.64	1.4	1.3	3.4	3.3	6.0	6.0	—	—	—	9.4
F 51 3_239.8	239.8	0.60	1.3	1.3	3.4	3.2	6.0	6.0	—	—	—	9.4
F 51 3_262.1	262.1	0.53	1.3	1.3	3.3	3.2	5.9	5.9	—	—	—	9.3
F 51 3_285.9	285.9	0.46	1.2	1.2	3.2	3.1	5.8	5.8	—	—	—	9.2
F 51 3_317.3	317.3	0.39	1.1	1.1	3.2	3.0	5.8	5.8	—	—	—	9.2
F 51 3_352.5	352.5	0.28	1.1	1.1	3.1	3.0	5.7	5.7	—	—	—	9.1
F 51 4_429.1	429.1	0.36	1.1	1.1	3.1	3.0	5.7	5.7	—	—	—	2.4
F 51 4_530.5	530.5	0.33	1.1	1.0	3.1	3.0	5.7	5.7	—	—	—	2.4
F 51 4_676.3	676.3	0.30	1.0	1.0	3.1	2.9	5.7	5.7	—	—	—	2.4
F 51 4_826.4	826.4	0.28	1.0	1.0	3.0	2.9	5.7	5.7	—	—	—	2.3
F 51 4_885.5	885.5	0.28	1.0	1.0	3.0	2.9	5.7	5.7	—	—	—	2.3
F 51 4_979.4	979.4	0.28	1.0	1.0	3.0	2.9	5.7	5.7	—	—	—	2.3
F 51 4_1070	1070	0.27	1.0	1.0	3.0	2.9	5.6	5.6	—	—	—	2.3
F 51 4_1168	1168	0.27	1.0	1.0	3.0	2.9	5.6	5.6	—	—	—	2.3
F 51 4_1296	1296	0.26	1.0	1.0	3.0	2.9	5.6	5.6	—	—	—	2.3
F 51 4_1439	1439	0.26	1.0	1.0	3.0	2.9	5.6	5.6	—	—	—	2.3

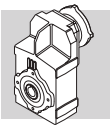

F 51

	i	J (•10-4) [kgm2]											
		SERVO											
		80B		95A		80C 95B 110A		95C 110B 130A		130B 180A		180B	
		SK	SC	SK	SC	SK	SC	SK	SC	SK	SC	SK	SC
F 51 2_7.2	7.2	—	—	—	—	28	29	28	23	42	44	42	47
F 51 2_9.1	9.1	—	—	—	—	20	21	19	20	34	36	33	38
F 51 2_11.1	11.1	—	—	—	—	19	20	19	20	33	35	33	38
F 51 2_14.0	14.0	—	—	—	—	14	15	14	15	28	30	28	33
F 51 2_18.8	18.8	—	—	—	—	9.8	10	9.6	11	24	26	24	29
F 51 2_23.8	23.8	—	—	—	—	7.3	7.8	7.2	8.2	21	24	21	26
F 51 2_30.0	30.0	5.9	6.4	5.9	6.4	5.9	6.4	5.8	6.8	20	23	20	25
F 51 2_37.1	37.1	5.0	5.5	5.0	5.5	5.0	5.5	4.9	5.9	19	22	19	24
F 51 3_48.9	48.9	—	—	—	—	8.9	9.4	8.8	9.8	23	26	23	28
F 51 3_65.8	65.8	—	—	—	—	6.9	7.4	6.8	7.8	21	24	21	26
F 51 3_83.2	83.2	—	—	—	—	5.5	6.0	5.4	6.4	20	22	19	24
F 51 3_105.1	105.1	4.8	5.3	4.8	5.3	4.8	5.3	4.6	5.6	19	21	19	24
F 51 3_129.9	129.9	4.3	4.8	4.3	4.8	4.3	4.8	4.1	5.1	18	21	18	23
F 51 3_165.6	165.6	3.8	4.2	3.8	4.2	3.7	4.2	3.6	4.6	18	20	17	22
F 51 3_202.4	202.4	3.5	4.0	3.5	4.0	3.5	4.0	3.3	4.3	18	20	17	22
F 51 3_216.9	216.9	3.5	3.9	3.5	3.9	3.4	3.9	3.3	4.3	—	—	—	—
F 51 3_239.8	239.8	3.4	3.9	3.4	3.9	3.4	3.9	3.2	4.2	—	—	—	—
F 51 3_262.1	262.1	3.4	3.8	3.4	3.8	3.3	3.8	3.2	4.2	—	—	—	—
F 51 3_285.9	285.9	3.3	3.7	3.3	3.7	3.2	3.7	3.1	4.1	—	—	—	—
F 51 3_317.3	317.3	3.2	3.6	3.2	3.6	3.2	3.7	3.0	4.0	—	—	—	—
F 51 3_352.5	352.5	3.1	3.5	3.1	3.5	3.1	3.6	3.0	4.0	—	—	—	—
F 51 4_429.1	429.1	—	—	3.2	3.6	3.1	3.6	3.0	4.0	—	—	—	—
F 51 4_530.5	530.5	—	—	3.2	3.6	3.1	3.6	3.0	4.0	—	—	—	—
F 51 4_676.3	676.3	—	—	3.1	3.6	3.1	3.6	2.9	3.9	—	—	—	—
F 51 4_826.4	826.4	—	—	3.1	3.5	3.0	3.5	2.9	3.9	—	—	—	—
F 51 4_885.5	885.5	—	—	3.1	3.5	3.0	3.5	2.9	3.9	—	—	—	—
F 51 4_979.4	979.4	—	—	3.1	3.5	3.0	3.5	2.9	3.9	—	—	—	—
F 51 4_1070	1070	—	—	3.1	3.5	3.0	3.5	2.9	3.9	—	—	—	—
F 51 4_1168	1168	—	—	3.1	3.5	3.0	3.5	2.9	3.9	—	—	—	—
F 51 4_1296	1296	—	—	3.1	3.5	3.0	3.5	2.9	3.9	—	—	—	—
F 51 4_1439	1439	—	—	3.1	3.5	3.0	3.5	2.9	3.9	—	—	—	—

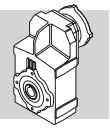

F 60

	i	J (•10-4) [kgm2]										
			63	71	80	90	100	112	132	160	180	
F 60 3_9.0	9.0	40	—	—	—	—	—	—	59	118	116	61
F 60 3_9.7	9.7	38	—	—	—	—	—	—	57	116	114	59
F 60 3_11.8	11.8	25	—	—	28	28	29	29	44	103	101	46
F 60 3_12.7	12.7	24	—	—	27	27	28	28	43	102	100	45
F 60 3_14.5	14.5	18	—	—	21	20	22	22	37	96	94	39
F 60 3_15.7	15.7	17	—	—	20	20	21	21	36	95	93	38
F 60 3_19.1	19.1	10	—	—	13	13	14	14	29	89	86	31
F 60 3_20.7	20.7	9.9	—	—	13	13	14	14	29	88	86	31
F 60 3_23.5	23.5	7.3	—	—	10	10	11	11	26	86	83	28
F 60 3_25.4	25.4	7.1	—	—	9.9	9.9	11	11	26	85	83	28
F 60 3_29.6	29.6	15	—	—	—	—	—	—	34	93	91	36
F 60 3_32.1	32.1	15	—	—	—	—	—	—	34	93	91	36
F 60 3_38.8	38.8	11	—	—	14	13	15	15	30	89	87	32
F 60 3_42.1	42.1	11	—	—	13	13	15	15	29	89	87	31
F 60 3_47.8	47.8	8.2	—	—	11	11	12	12	27	86	84	29
F 60 3_51.8	51.8	8.1	—	—	11	11	12	12	27	86	84	29
F 60 3_63.0	63.0	4.9	—	—	7.7	7.6	8.9	8.9	24	83	81	26
F 60 3_68.3	68.3	4.8	—	—	7.7	7.6	8.9	8.9	24	83	81	26
F 60 3_77.6	77.6	3.7	—	—	6.6	6.5	7.8	7.8	23	82	80	25
F 60 3_84.0	84.0	3.7	—	—	6.5	6.5	7.8	7.8	23	82	80	25
F 60 3_98.2	98.2	2.7	4.2	4.2	5.6	5.5	6.8	6.8	22	81	79	24
F 60 3_106.4	106.4	2.7	4.2	4.2	5.5	5.4	6.8	6.8	22	81	79	24
F 60 3_120.5	120.5	1.8	3.2	3.2	4.6	4.6	5.9	5.9	21	80	78	23
F 60 3_130.5	130.5	1.8	3.2	3.2	4.6	4.6	5.8	5.8	21	80	78	23
F 60 3_150.4	150.4	1.3	2.7	2.7	4.1	4.1	5.4	5.4	20	80	77	22
F 60 3_162.9	162.9	1.3	2.7	2.7	4.1	4.1	5.4	5.4	20	80	77	22
F 60 3_185.9	185.9	0.90	2.4	2.4	3.8	3.7	5.0	5.0	20	79	77	22
F 60 3_201.4	201.4	0.90	2.4	2.4	3.8	3.7	5.0	5.0	20	79	77	22
F 60 3_217.6	217.6	0.70	2.2	2.2	3.6	3.5	4.8	4.8	—	—	—	22
F 60 3_235.8	235.8	0.70	2.2	2.2	3.6	3.5	4.8	4.8	—	—	—	22
F 60 3_259.1	259.1	0.50	2.0	2.0	3.4	3.3	4.6	4.6	—	—	—	22
F 60 3_280.7	280.7	0.50	2.0	2.0	3.4	3.3	4.6	4.6	—	—	—	22

For the values of the moment of inertia of 4-stage gearboxes, please contact our Technical Service department.

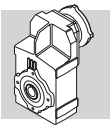

F 60

	i	J (•10-4) [kgm2]									
		SERVO									
		95A		80C 95B 110A		95C 110B 130A		130B 180A		180B	
		SK	SC	SK	SC	SK	SC	SK	SC	SK	SC
F 60 3_9.0	9.0	—	—	—	—	—	—	57	59	59	64
F 60 3_9.7	9.7	—	—	—	—	—	—	55	57	57	62
F 60 3_11.8	11.8	—	—	28	29	28	29	42	44	44	49
F 60 3_12.7	12.7	—	—	27	28	27	28	41	43	43	48
F 60 3_14.5	14.5	—	—	21	22	20	21	35	37	37	42
F 60 3_15.7	15.7	—	—	20	21	20	21	34	36	36	41
F 60 3_19.1	19.1	—	—	13	14	13	14	27	29	29	34
F 60 3_20.7	20.7	—	—	13	14	13	14	27	29	29	34
F 60 3_23.5	23.5	—	—	10	11	10	11	24	27	26	31
F 60 3_25.4	25.4	—	—	9.9	10	9.9	11	24	27	26	31
F 60 3_29.6	29.6	—	—	—	—	—	—	32	34	34	39
F 60 3_32.1	32.1	—	—	—	—	—	—	32	34	34	39
F 60 3_38.8	38.8	—	—	14	15	13	14	28	30	30	35
F 60 3_42.1	42.1	—	—	13	14	13	14	28	30	29	34
F 60 3_47.8	47.8	—	—	11	12	11	12	25	28	27	32
F 60 3_51.8	51.8	—	—	11	12	11	12	25	28	27	32
F 60 3_63.0	63.0	—	—	7.7	8.2	7.6	8.6	22	24	24	29
F 60 3_68.3	68.3	—	—	7.7	8.2	7.6	8.6	22	24	24	29
F 60 3_77.6	77.6	—	—	6.6	7.1	6.5	7.5	21	23	23	28
F 60 3_84.0	84.0	—	—	6.5	7.0	6.5	7.5	21	23	23	28
F 60 3_98.2	98.2	—	—	5.6	6.1	5.5	6.5	20	22	22	27
F 60 3_106.4	106.4	5.5	6.0	5.5	6.0	5.4	6.4	20	22	22	27
F 60 3_120.5	120.5	2.2	2.7	4.6	5.1	4.6	5.6	19	21	21	26
F 60 3_130.5	130.5	2.2	2.7	4.6	5.1	4.6	5.6	19	21	21	26
F 60 3_150.4	150.4	4.1	4.6	4.1	4.6	4.1	5.1	18	21	20	25
F 60 3_162.9	162.9	4.1	4.6	4.1	4.6	4.1	5.1	18	21	20	25
F 60 3_185.9	185.9	3.7	4.2	3.8	4.3	3.7	4.7	18	20	20	25
F 60 3_201.4	201.4	3.7	4.2	3.8	4.3	3.7	4.7	18	20	20	25
F 60 3_217.6	217.6	3.5	4.0	3.6	4.1	3.5	4.5	—	—	—	—
F 60 3_235.8	235.8	3.5	4.0	3.6	4.1	3.5	4.5	—	—	—	—
F 60 3_259.1	259.1	3.3	3.8	3.4	3.9	3.3	4.3	—	—	—	—
F 60 3_280.7	280.7	3.3	3.8	3.4	3.9	3.3	4.3	—	—	—	—

For the values of the moment of inertia of 4-stage gearboxes, please contact our Technical Service department.

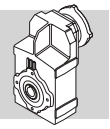

F 70

	i	J (•10-4) [kgm2]									
			80	90	100	112	132	160	180	200	
F 70 3_10.0	10.0	—	—	—	—	—	—	169	167	176	133
F 70 3_10.9	10.9	—	—	—	—	—	—	166	163	173	129
F 70 3_12.8	12.8	—	—	—	—	—	—	139	137	146	102
F 70 3_13.9	13.9	—	—	—	—	—	—	137	135	144	100
F 70 3_16.3	16.3	39	—	—	—	—	58	117	115	124	80
F 70 3_17.7	17.7	37	—	—	—	—	56	116	113	123	79
F 70 3_20.9	20.9	26	—	—	—	—	45	105	102	—	68
F 70 3_22.6	22.6	26	—	—	—	—	44	104	102	—	67
F 70 3_24.6	24.6	21	—	—	—	—	40	99	97	—	62
F 70 3_27.7	27.7	—	—	—	—	—	—	128	126	135	73
F 70 3_30.0	30.0	—	—	—	—	—	—	127	125	134	73
F 70 3_35.4	35.4	—	—	—	—	—	—	114	112	121	77
F 70 3_38.4	38.4	—	—	—	—	—	—	114	111	121	77
F 70 3_45.2	45.2	23	—	—	—	—	42	101	99	108	65
F 70 3_49.0	49.0	23	—	—	—	—	42	101	99	108	65
F 70 3_57.7	57.7	17	—	—	—	—	36	95	93	—	58
F 70 3_62.5	62.5	17	—	—	—	—	36	95	93	—	58
F 70 3_67.9	67.9	14	—	—	—	—	33	92	90	—	55
F 70 3_73.6	73.6	14	—	—	—	—	33	92	90	—	55
F 70 3_85.4	85.4	9.0	11	11	13	13	28	87	85	—	50
F 70 3_92.5	92.5	9.0	11	11	13	13	28	87	85	—	50
F 70 3_101.2	101.2	6.3	8.9	8.8	10	10	25	85	82	—	47
F 70 3_109.6	109.6	6.3	8.9	8.8	10	10	25	85	82	—	47
F 70 3_122.7	122.7	5.1	7.9	7.8	9.1	9.1	24	83	81	—	46
F 70 3_133.0	133.0	5.1	7.9	7.8	9.1	9.1	24	83	81	—	46
F 70 3_153.8	153.8	3.2	6.0	6.0	7.3	7.3	22	81	79	—	44
F 70 3_166.7	166.7	3.2	6.0	6.0	7.3	7.3	22	81	79	—	44
F 70 3_180.9	180.9	2.3	5.1	5.1	6.3	6.3	21	81	78	—	43
F 70 3_196.0	196.0	2.3	5.1	5.0	6.3	6.3	21	81	78	—	43

For the values of the moment of inertia of 4-stage gearboxes, please contact our Technical Service department.

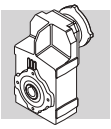

F 80

	i	J (•10-4) [kgm2]										
			80	90	100	112	132	160	180	200	225	
F 80 3_10.3	10.3	—	—	—	—	—	—	—	286	300	578	252
F 80 3_11.2	11.2	—	—	—	—	—	—	—	277	291	569	244
F 80 3_12.9	12.9	—	—	—	—	—	—	217	218	231	509	184
F 80 3_14.0	14.0	—	—	—	—	—	—	212	212	226	504	178
F 80 3_16.2	16.2	—	—	—	—	—	—	173	171	180	464	136
F 80 3_17.6	17.6	—	—	—	—	—	—	170	167	177	461	133
F 80 3_20.3	20.3	60	—	—	—	—	79	139	136	146	431	102
F 80 3_22.0	22.0	58	—	—	—	—	77	136	134	143	429	100
F 80 3_25.2	25.2	43	—	—	—	—	62	121	119	150	413	84
F 80 3_28.8	28.8	—	—	—	—	—	—	—	189	203	480	155
F 80 3_31.3	31.3	—	—	—	—	—	—	—	188	201	479	154
F 80 3_36.0	36.0	—	—	—	—	—	—	155	155	169	447	121
F 80 3_39.0	39.0	—	—	—	—	—	—	154	154	168	446	121
F 80 3_45.3	45.3	—	—	—	—	—	—	133	132	141	425	97
F 80 3_49.1	49.1	—	—	—	—	—	—	133	131	140	425	97
F 80 3_56.7	56.7	35	—	—	—	—	54	113	111	120	406	77
F 80 3_61.5	61.5	35	—	—	—	—	54	113	111	120	406	76
F 80 3_70.4	70.4	27	—	—	—	—	46	105	103	133	397	68
F 80 3_76.3	76.3	27	—	—	—	—	45	105	103	133	396	68
F 80 3_85.2	85.2	20	—	—	—	—	39	99	96	126	389	62
F 80 3_92.3	92.3	20	—	—	—	—	39	99	96	126	389	61
F 80 3_105.0	105.0	14	16	16	17	17	32	92	90	119	383	55
F 80 3_113.8	113.8	14	16	16	17	17	32	92	90	119	382	55
F 80 3_122.5	122.5	13	15	15	17	17	32	91	89	118	381	54
F 80 3_132.7	132.7	13	15	15	16	16	31	91	89	118	381	54
F 80 3_147.9	147.9	8.5	11	11	13	13	27	87	85	114	377	50
F 80 3_160.2	160.2	8.5	11	11	13	13	27	87	84	—	—	50
F 80 3_184.6	184.6	5.1	7.9	7.8	9.1	9.1	24	83	81	—	—	46
F 80 3_200.0	200.0	5.0	7.9	7.8	9.1	9.1	24	83	81	—	—	46

For the values of the moment of inertia of 4-stage gearboxes, please contact our Technical Service department.

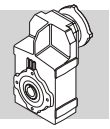

F 90

	i	J (•10-4) [kgm2]											
			80	90	100	112	132	160	180	200	225	250	
F 90 3_10.3	10.3	—	—	—	—	—	—	—	549	559	843	870	850
F 90 3_11.1	11.1	—	—	—	—	—	—	—	529	539	823	850	830
F 90 3_13.4	13.4	—	—	—	—	—	—	—	373	383	667	694	674
F 90 3_14.5	14.5	—	—	—	—	—	—	—	361	371	655	682	662
F 90 3_16.5	16.5	—	—	—	—	—	—	—	286	296	580	607	587
F 90 3_17.9	17.9	—	—	—	—	—	—	—	278	288	572	599	579
F 90 3_20.6	20.6	—	—	—	—	—	—	224	222	232	516	542	513
F 90 3_22.3	22.3	—	—	—	—	—	—	220	217	227	511	537	508
F 90 3_25.4	25.4	103	—	—	—	—	122	181	179	188	474	500	471
F 90 3_28.6	28.6	—	—	—	—	—	—	—	291	301	585	613	593
F 90 3_31.0	31.0	—	—	—	—	—	—	—	289	299	583	610	590
F 90 3_37.4	37.4	—	—	—	—	—	—	—	222	232	516	543	523
F 90 3_40.5	40.5	—	—	—	—	—	—	—	220	230	514	541	521
F 90 3_46.1	46.1	—	—	—	—	—	—	—	186	196	480	507	487
F 90 3_49.9	49.9	—	—	—	—	—	—	—	185	195	479	506	486
F 90 3_57.3	57.3	—	—	—	—	—	—	161	158	168	452	479	450
F 90 3_62.1	62.1	—	—	—	—	—	—	160	158	167	451	478	449
F 90 3_70.8	70.8	61	—	—	—	—	80	139	137	146	432	458	429
F 90 3_76.7	76.7	60	—	—	—	—	79	139	136	146	431	458	429
F 90 3_88.4	88.4	44	—	—	—	—	63	123	120	151	414	441	412
F 90 3_95.8	95.8	44	—	—	—	—	63	122	120	151	414	441	412
F 90 3_103.3	103.3	41	—	—	—	—	59	119	117	146	410	436	408
F 90 3_111.9	111.9	40	—	—	—	—	59	119	116	146	409	436	407
F 90 3_126.8	126.8	26	29	29	30	30	45	105	102	132	395	422	393
F 90 3_137.3	137.3	26	29	29	30	30	45	104	102	132	395	422	393
F 90 3_150.3	150.3	21	24	24	25	25	40	100	97	127	390	417	388
F 90 3_162.8	162.8	21	24	24	25	25	40	100	97	127	390	417	388
F 90 3_179.2	179.2	14	16	16	18	18	33	92	90	—	—	—	381
F 90 3_194.2	194.2	14	16	16	17	17	33	92	90	—	—	—	381

For the values of the moment of inertia of 4-stage gearboxes, please contact our Technical Service department.

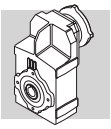

63 EXACT RATIOS

i_N	F 10	F 20	F 25	F 31	F 41	F 51	F 60	F 70	F 80	F 90
6.3		6.41210								
7.1	7.40443		6.86957	6.94907	6.72727	7.19408				
8.0		7.83478	8.39375	8.22917						
9.0	8.58204	8.73227	9.35526	9.01630	9.13580	9.05114	8.96000			
10.0	9.76974	10.03069	10.62451	10.74747			9.70667	10.01538	10.33846	10.26577
11.2	11.53759	11.23370			10.77273	11.11005	11.75320	10.85000	11.20000	11.12125
12.5	13.02632		12.98182	12.72727		13.97796	12.73263	12.81731	12.90240	13.41346
14.0	14.64777	14.79842	14.46890	13.94466	14.62963		14.47385	13.88542	13.97760	14.53125
16.0	16.97738		16.62032	16.80000	17.11667		15.68000	16.34455	16.24615	16.52538
18.0		18.08182	18.61364	18.48804	18.89130	18.82155	19.06872	17.70660	17.60000	17.90250
20.0	19.32692	20.15311	21.81818	21.11230			20.65778	20.86538	20.33231	20.56731
22.4	22.82418	23.14973	23.75758	23.38636		23.79447	23.46381	22.60417	22.02667	22.28125
25.0	25.76923	25.92614	27.20455	27.27273	24.11579		25.41913	24.55695	25.22585	25.38622
28.0	29.63462	30.38961	30.03636	30.12121	30.11875	30.03828	29.61538	27.69231	28.84615	28.61169
31.5	32.98462	33.09091	32.18182	34.36364			32.08333	30.00000	31.25000	30.99600
35.5	35.34066	37.89205	36.41958	37.67273	38.18333	37.13636	38.84771	35.43956	36.00000	37.38462
40.0	39.64497	41.83636	40.72727	40.36364			42.08502	38.39286	39.00000	40.50000
45.0	44.66667	44.82468	45.56607	44.64336	47.92667		47.84024	45.19231	45.32967	46.05785
50.0	48.72727	50.72727	50.78571	47.54630	51.49270	48.89965	51.82692	48.95833	49.10714	49.89600
56.0	56.69231	56.72727	58.33718	52.09420	60.24646		63.02761	57.69231	56.73077	57.32308
63.0	62.99145	61.88430	65.33371	62.76111	66.49275	65.84416	68.27991	62.50000	61.45833	62.10000
71.0	71.12308	69.13636	76.58163	69.06725			77.55467	73.55769	70.38462	70.75385
80.0	81.31624	76.81818	83.38889	78.87092	84.88166	83.24111	84.01756	85.38462	76.25000	76.65000
90.0	91.48077	90.40909	95.48772	87.36632			98.19838	92.50000	92.30769	88.39385
100.0	106.02198	101.63636	105.42738	101.88492	106.01061	105.08407	106.38158	101.18343	105.00000	103.33491
112.2		114.34091	112.95791	112.52623			120.45488	109.61538	113.75000	111.94615
125.5	127.12821	132.19481	127.83242	128.37500	134.39596	129.91558	130.49279	122.72727	122.48521	126.77538
140.0		156.30469	142.95238	140.73704			150.35503	132.95455	132.69231	150.30533
160.0		172.57500	155.94805	166.77778	168.69010	165.62338	162.88462	166.66667	160.22727	162.83077
180.0		184.90179	174.22321	185.43056	180.73939	202.39481	185.89349	180.94406	184.61538	179.21958
200.0		209.25000	193.58135	202.28788	198.92028	216.85158	201.38462	196.02273	200.00000	194.15455
225.0		234.00000	227.83036	228.22222	220.13131	239.84416	217.64679	216.52422	218.49174	213.59178
250.0		255.27273	256.12302	253.58025	240.14325	262.11039	259.08284	234.56790	273.89277	231.39109
280.0		285.18750	288.13839	293.83611	266.93818	285.93861	280.67308	280.93645	296.71717	268.72770
315.0		316.87500	333.13010	332.82407	296.59798	317.26753	315.38899	304.34783	353.67893	291.12168
355.0		372.93750		374.42708	344.79515	352.51948	341.67140	372.46964	383.15217	361.84615
400.0		419.25000	393.88686	418.86023		429.09330	399.34008	403.50877	451.49061	392.00000
450.0		471.65625	434.88795	462.60785	433.67975		432.61842	471.15385	489.11483	457.45099
500.0			465.95137	527.76389			489.84985	510.41667	563.87675	495.57191
560.0		545.30357	527.30872	578.58560	549.80165	530.48864	530.67067	606.83761	610.86648	577.48888
630.0			589.67857	619.91314	690.09587	676.29545	611.44379	657.40741	714.86014	625.61296
710.0			643.28571	685.64198	739.38843	826.44545	755.96686	758.97436	774.43182	713.95030
800.0			718.67076	762.32562	813.76478	885.47727	818.96410	822.22222	897.27273	773.44615
900.0			798.52307	831.62795	900.53719	979.36364	885.09695	899.40828	972.04545	910.18225
1000.0			939.80022	938.24691	982.40421	1070.28409	958.85503	974.35897	1058.06885	986.03077
1125.0			1056.50744	1042.49657	1092.01983	1167.58264	1053.60355	1090.90909	1146.24126	1112.25941
1250.0			1188.57087	1207.99290	1213.35537	1295.50909	1141.40385	1181.81818	1277.33630	1204.94769
1400.0			1374.16167	1368.27675	1410.52562	1439.45455		1367.52137	1383.78099	1427.90059
1600.0				1539.31134				1584.61538	1577.62238	1571.37386
1800.0								1716.66667	1709.09091	1702.32168
2000.0								2019.23077	1833.98601	1937.26864
2250.0								2187.50000	1986.81818	2098.70769

2x 3x 4x

F 10...M

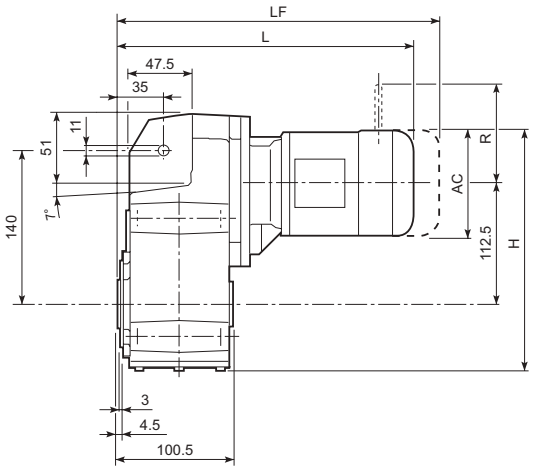

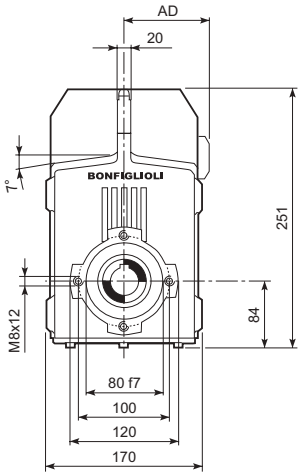

								M...FD M...FA		M...FD		M...FA	
			AC	H	L	AD		LF		R	AD	R	AD
F 10 2	**S05**	**M05**	121	220.5	311.5	95	12	377.5	13	96	122	116	95
F 10 2	**S1**	**M1**	138	265.5	340.5	108	14	401.5	17	103	135	124	108
F 10 2	**S2**	**M2S**	156	274.5	369.5	119	18	439.5	21	129	146	134	119
F 10 2	**S3**	**M3S**	195	294	412.5	142	22	508.5	30	160	158	160	142
F 10 2	**S3**	**M3L**	195	294	444.5	142	24	535.5	31	160	158	160	142

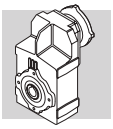

F 10...P(IEC)

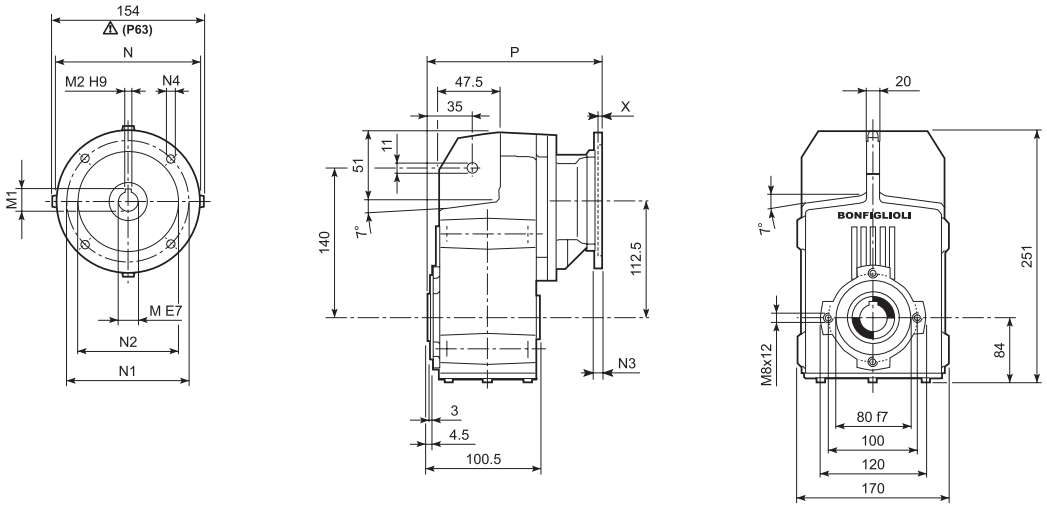

		M	M1	M2	N	N1	N2	N3	N4	X	P	
F 10 2	**P63**	11	12.8	4	140	115	95	—	M8x19	4	185.5	8
F 10 2	**P71**	14	16.3	5	160	130	110	—	M8x16	4.5	185.5	8
F 10 2	**P80**	19	21.8	6	200	165	130	—	M10x14.5	4	205	9
F 10 2	**P90**	24	27.3	8	200	165	130	—	M10x14.5	4	205	9
F 10 2	**P100**	28	31.3	8	250	215	180	—	M12x16	4.5	215	13
F 10 2	**P112**	28	31.3	8	250	215	180	—	M12x16	4.5	215	13

F 10...HS

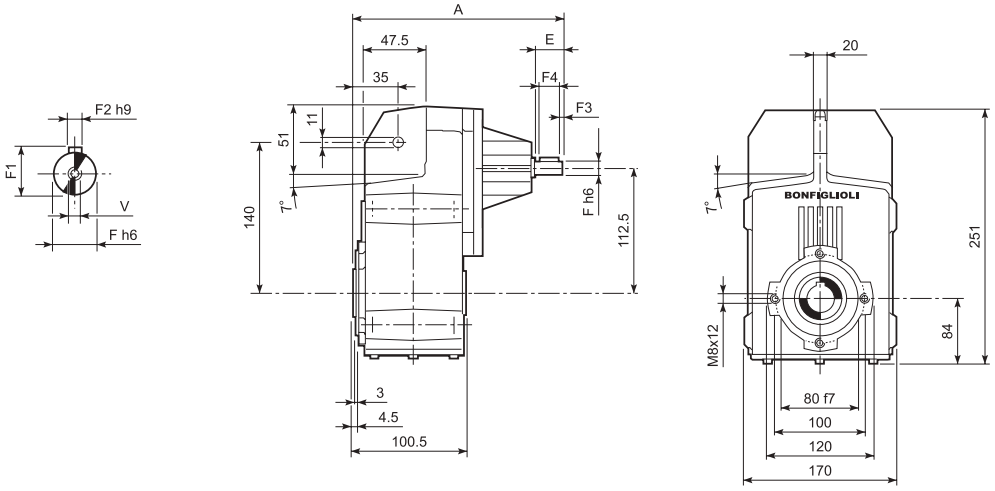

		A	E	F	F1	F2	F3	F4	V	
F 10 2	**HS**	192	40	16	18	5	2.5	35	M6x16	7.5

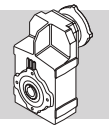

F 10...SK / SC

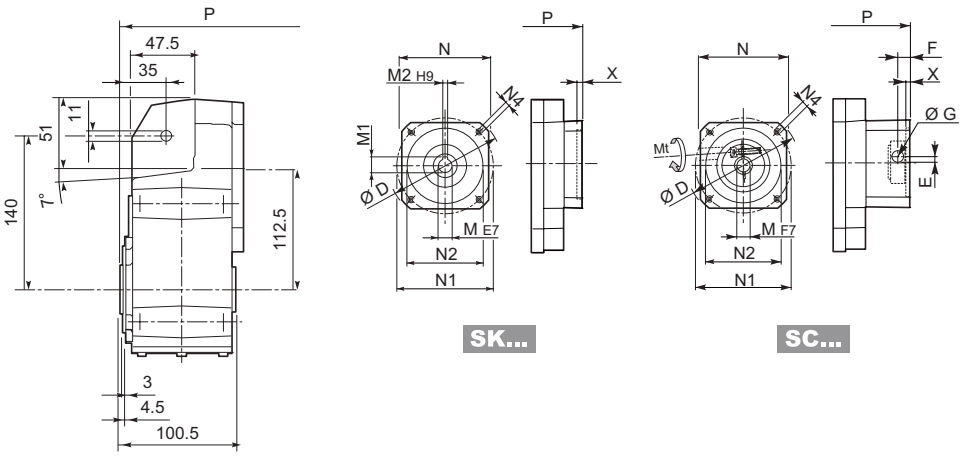

		D	M	M1	M2	N	N1	N2	N4	X	P	
F 10 2	**SK 60A**	102	11	12.8	4	82	75	60	M5x10	3.5	157	8
F 10 2	**SK 60B**	102	14	16.3	5	82	75	60	M5x10	4	164	8
F 10 2	**SK 80A**	115	14	16.3	5	90	100	80	M6x12	4	164	8
F 10 2	**SK 80C**	120	19	21.8	6	96	100	80	M6x12	4	205	9
F 10 2	**SK 95A**	130	14	16.3	5	102	115	95	M8x12	4	205	9
F 10 2	**SK 95B**	130	19	21.8	6	102	115	95	M8x12	4	205	9
F 10 2	**SK 95C**	130	24	27.3	8	102	115	95	M8x12	4	205	9
F 10 2	**SK 110A**	150	19	21.8	6	120	130	110	M8x12	5	205	9
F 10 2	**SK 110B**	150	24	27.3	8	120	130	110	M8x12	5	205	9

			Mt [Nm]	D	E	F	G	M	N	N1	N2	N4	X	P	
F 10 2	**SC 60A**	M6	15	102	7	12.5	12.5	11	82	75	60	M5x10	4	184	8
F 10 2	**SC 60B**	M6	15	102	7	12.5	12.5	14	82	75	60	M5x10	4	184	9
F 10 2	**SC 80A**	M6	15	115	6	12.5	12.5	14	90	100	80	M6x12	4	184	9
F 10 2	**SC 80C**	M6	15	120	15.5	14.5	17.75	19	96	100	80	M6x12	4	228.5	10
F 10 2	**SC 95A**	M6	15	130	16.5	15	17.75	14	102	115	95	M8x16	4	228.5	10
F 10 2	**SC 95B**	M6	15	130	16.5	15	17.75	19	102	115	95	M8x16	4	228.5	10
F 10 2	**SC 95C**	M6	15	130	16.5	15	17.75	24	102	115	95	M8x16	4	228.5	10
F 10 2	**SC 110A**	M6	15	150	16.5	16	17.75	19	120	130	110	M8x16	5	228.5	11
F 10 2	**SC 110B**	M6	15	150	16.5	16	17.75	24	120	130	110	M8x16	5	228.5	11

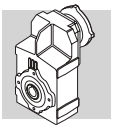

F 10

F 10...H

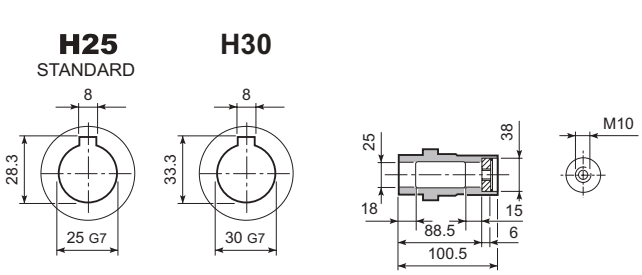

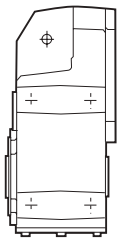

F 10...S

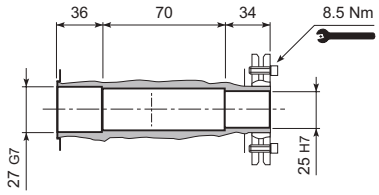

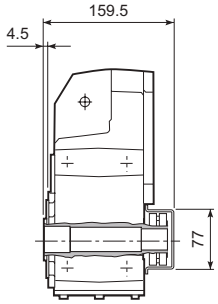

F 10...R

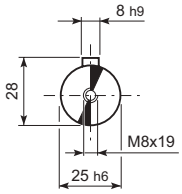

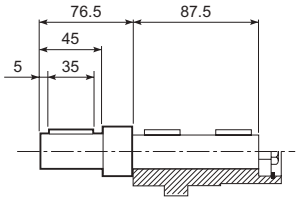

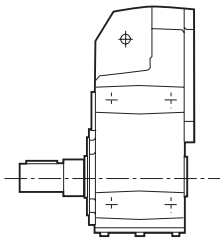

F 10...QF

	Ø
QF25	25
QF30	30

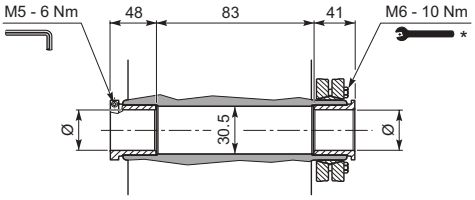

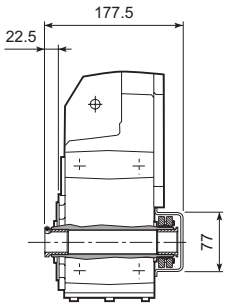

F 10...F...

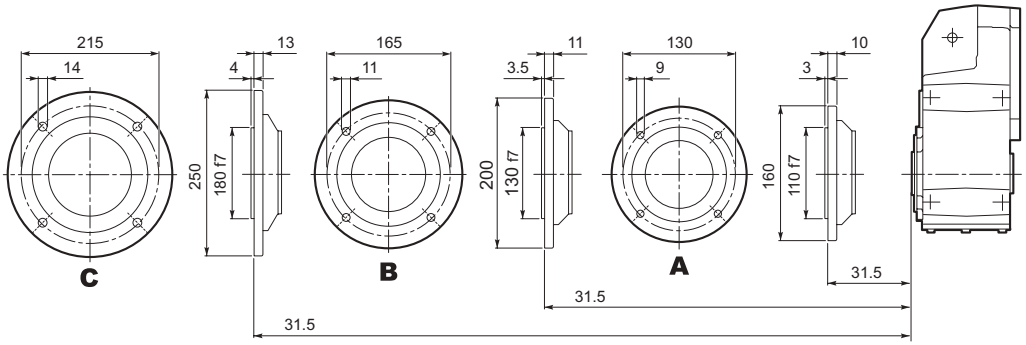

* Follow the MOUNTING INSTRUCTIONS supplied with the gearbox.

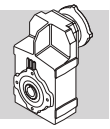

F 20...M

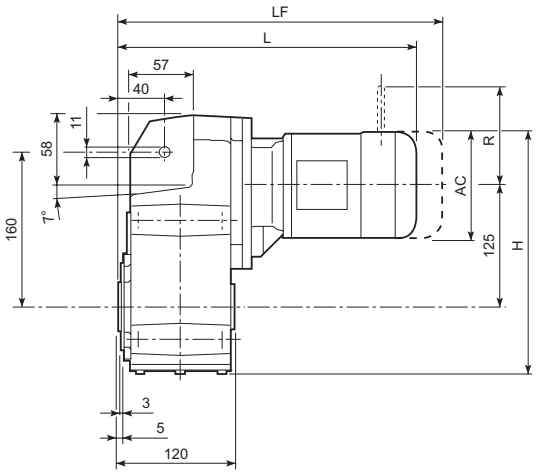

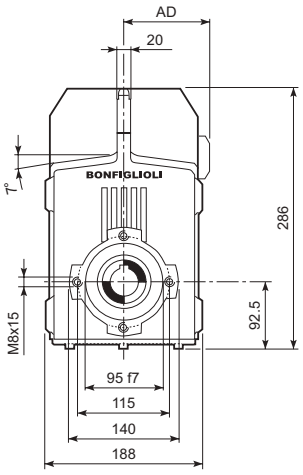

								M...FD M...FA		M...FD		M...FA	
			AC	H	L	AD		LF		R	AD	R	AD
F 20 2	**S05**	**M05**	121	278.2	323.5	95	15	389.5	17	96	122	116	95
F 20 2	**S1**	**M1**	138	286.7	352.5	108	17	413.5	20	103	135	124	108
F 20 2	**S2**	**M2S**	156	295.7	381.5	119	21	451.5	25	129	146	134	119
F 20 2	**S3**	**M3S**	195	315.2	424.5	142	26	520.5	33	160	158	160	142
F 20 2	**S3**	**M3L**	195	315.2	456.5	142	31	547.5	38	160	158	160	142
F 20 3	**S05**	**M05**	121	278.2	379	95	17	445	18	96	122	116	95
F 20 3	**S1**	**M1**	138	286.7	408	108	19	469	21	103	135	124	108
F 20 3	**S2**	**M2S**	156	295.7	437	119	22	507	26	129	146	134	119
F 20 3	**S3**	**M3S**	195	315.2	480	142	27	576	34	160	158	160	142
F 20 3	**S3**	**M3L**	195	315.2	512	142	32	603	39	160	158	160	142

Bonfiglioli Riduttori

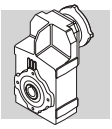

F 20...P(IEC)

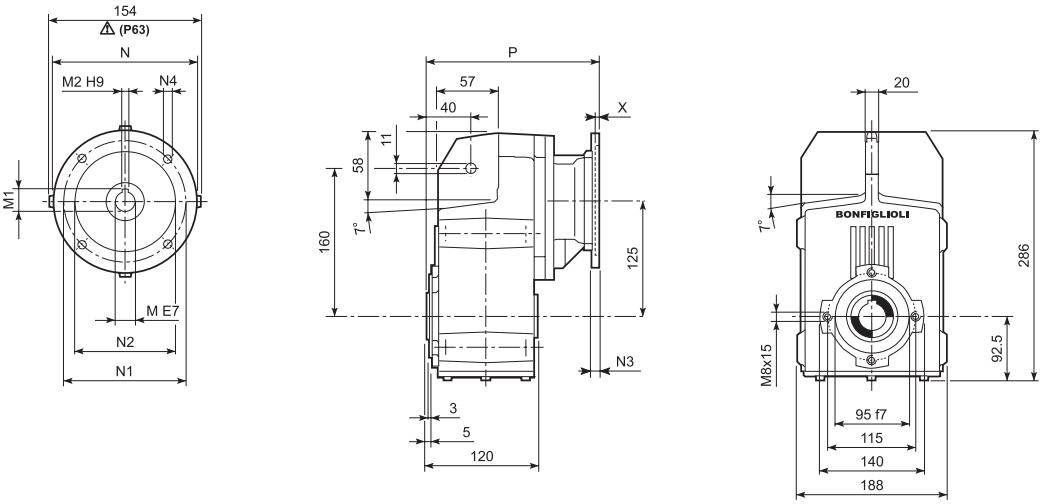

		M	M1	M2	N	N1	N2	N3	N4	X	P	
F 20 2	**P63**	11	12.8	4	140	115	95	—	M8x19	4	197.5	12
F 20 2	**P71**	14	16.3	5	160	130	110	—	M8x16	4.5	197.5	12
F 20 2	**P80**	19	21.8	6	200	165	130	—	M10x14.5	4	217	13
F 20 2	**P90**	24	27.3	8	200	165	130	—	M10x14.5	4	217	12
F 20 2	**P100**	28	31.3	8	250	215	180	—	M12x16	4.5	227	16
F 20 2	**P112**	28	31.3	8	250	215	180	—	M12x16	4.5	227	16
F 20 3	**P63**	11	12.8	4	140	115	95	—	M8x19	4	253	13
F 20 3	**P71**	14	16.3	5	160	130	110	—	M8x16	4.5	253	13
F 20 3	**P80**	19	21.8	6	200	165	130	—	M10x14.5	4	272.5	14
F 20 3	**P90**	24	27.3	8	200	165	130	—	M10x14.5	4	272.5	14
F 20 3	**P100**	28	31.3	8	250	215	180	—	M12x16	4.5	282.5	18
F 20 3	**P112**	28	31.3	8	250	215	180	—	M12x16	4.5	282.5	18

F 20...HS

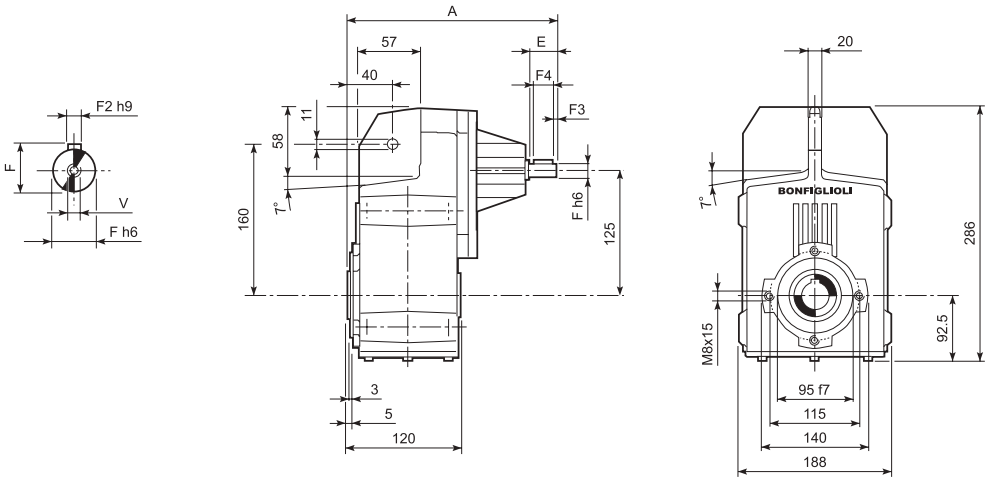

		A	E	F	F1	F2	F3	F4	V	
F 20 2	**HS**	247.5	40	19	21.5	6	2.5	35	M6x16	11.5
F 20 3		260	40	16	18	5	2.5	35	M6x16	12.4

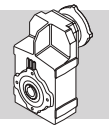

F 20...SK / SC

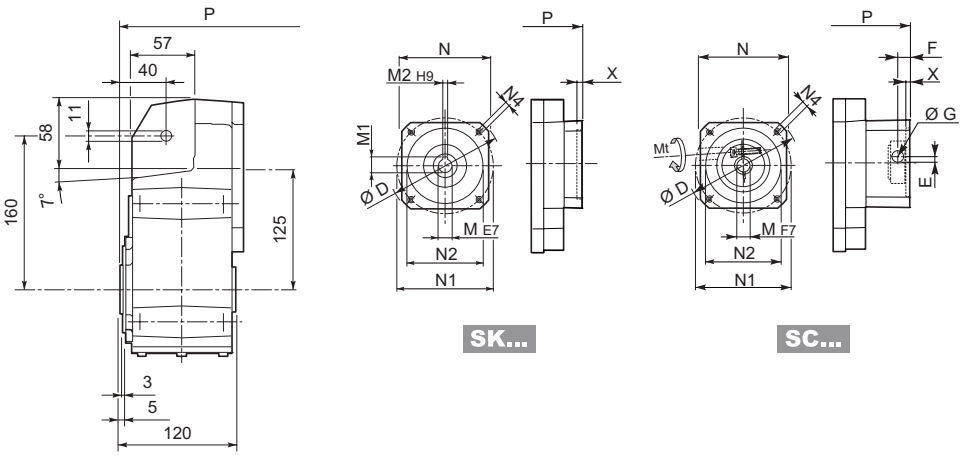

											2x		3x	
		D	M	M1	M2	N	N1	N2	N4	X	P		P	
F 20 2/3	**SK 60A**	102	11	12.8	4	82	75	60	M5x10	3.5	169	11	224.5	12
F 20 2/3	**SK 60B**	102	14	16.3	5	82	75	60	M5x10	4	176	12	231.5	13
F 20 2/3	**SK 80A**	115	14	16.3	5	90	100	80	M6x12	4	217	12	231.5	13
F 20 2/3	**SK 80C**	120	19	21.8	6	96	100	80	M6x12	4	217	13	272.5	14
F 20 2/3	**SK 95A**	130	14	16.3	5	102	115	95	M8x12	4	217	13	272.5	14
F 20 2/3	**SK 95B**	130	19	21.8	6	102	115	95	M8x12	4	217	13	272.5	14
F 20 2/3	**SK 95C**	130	24	27.3	8	102	115	95	M8x12	4	217	13	272.5	14
F 20 2/3	**SK 110A**	150	19	21.8	6	120	130	110	M8x12	5	217	13	272.5	14
F 20 2/3	**SK 110B**	150	24	27.3	8	120	130	110	M8x12	5	217	13	272.5	14

														2x		3x	
			Mt [Nm]	D	E	F	G	M	N	N1	N2	N4	X	P		P	
F 20 2/3	**SC 60A**	M6	15	102	7	12.5	12.5	11	82	75	60	M5x10	4	196	12	251.5	13
F 20 2/3	**SC 60B**	M6	15	102	7	12.5	12.5	14	82	75	60	M5x10	4	196	13	251.5	14
F 20 2/3	**SC 80A**	M6	15	115	6	12.5	12.5	14	90	100	80	M6x12	4	196	13	251.5	14
F 20 2/3	**SC 80C**	M6	15	120	15.5	14.5	17.75	19	96	100	80	M6x12	4	240.5	14	296	15
F 20 2/3	**SC 95A**	M6	15	130	16.5	15	17.75	14	102	115	95	M8x16	4	240.5	14	296	15
F 20 2/3	**SC 95B**	M6	15	130	16.5	15	17.75	19	102	115	95	M8x16	4	240.5	14	296	15
F 20 2/3	**SC 95C**	M6	15	130	16.5	15	17.75	24	102	115	95	M8x16	4	240.5	14	296	15
F 20 2/3	**SC 110A**	M6	15	150	16.5	16	17.75	19	120	130	110	M8x16	5	240.5	15	296	16
F 20 2/3	**SC 110B**	M6	15	150	16.5	16	17.75	24	120	130	110	M8x16	5	240.5	15	296	16

Bonfiglioli Riduttori

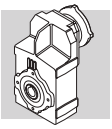

F 20

F 20...H

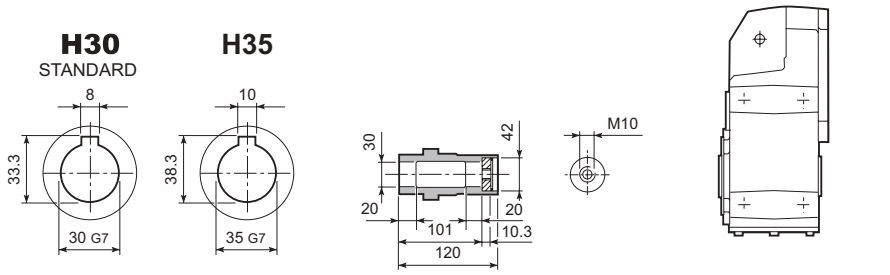

F 20...S

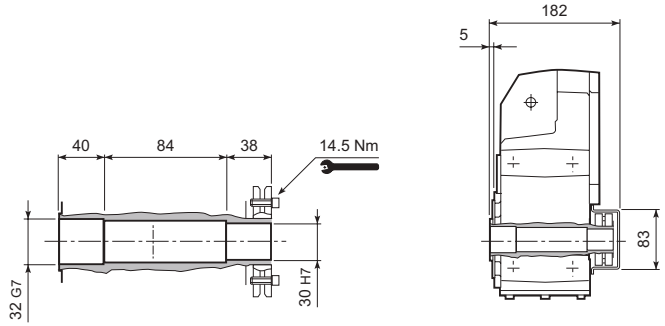

F 20...R

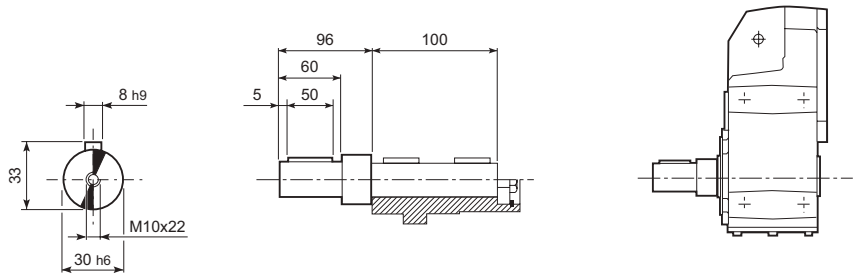

F 20...QF

	Ø
QF25	25
QF30	30

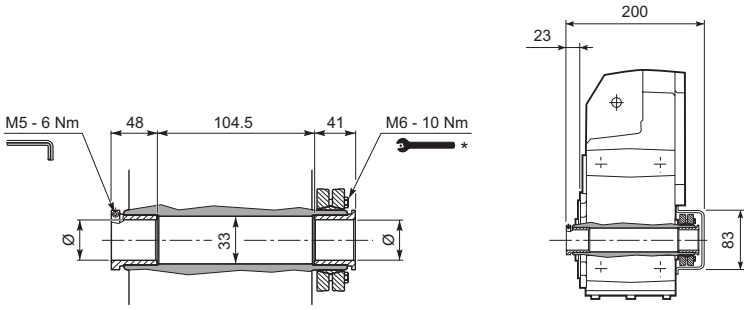

F 20...F...

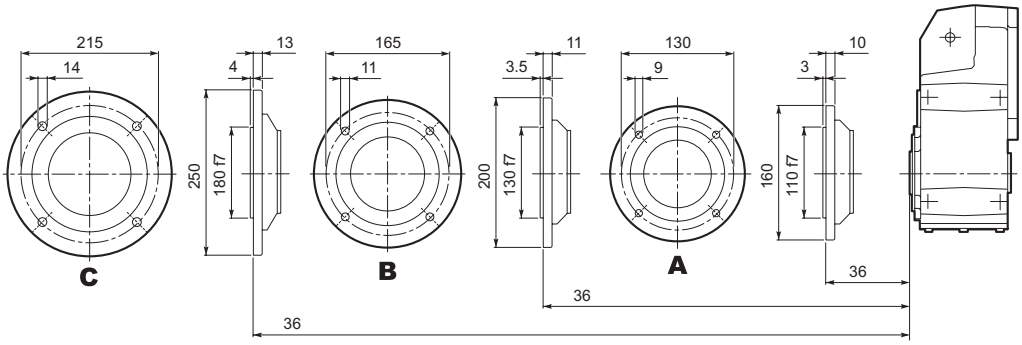

* Follow the MOUNTING INSTRUCTIONS supplied with the gearbox.

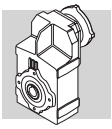

F 25...M

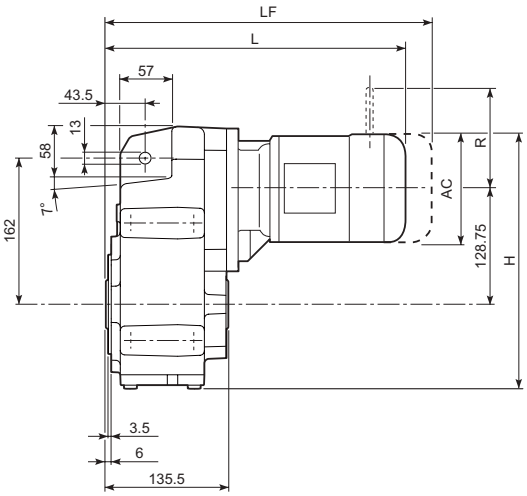

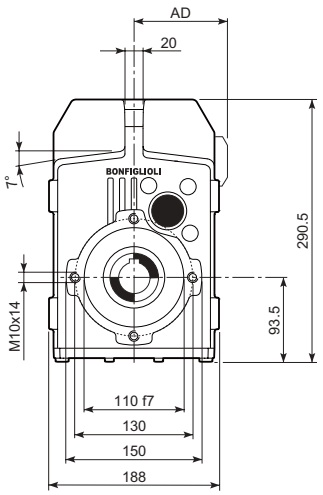

								M...FD M...FA		M...FD		M...FA	
			AC	H	L	AD		LF		R	AD	R	AD
F 25 2/3	**S05**	**M05**	121	283	339	95	15	405	17	96	122	116	95
F 25 2/3	**S1**	**M1**	138	291.5	368	108	17	429	20	103	135	124	108
F 25 2/3	**S2**	**M2S**	156	300.5	397	119	21	467	25	129	146	134	119
F 25 2/3	**S3**	**M3S**	195	320	440	142	26	536	33	160	158	160	142
F 25 2/3	**S3**	**M3L**	195	320	472	142	31	563	38	160	158	160	142
F 25 4	**S05**	**M05**	121	283	394.5	95	17	460.5	18	96	122	116	95
F 25 4	**S1**	**M1**	138	291.5	423.5	108	19	484.5	21	103	135	124	108
F 25 4	**S2**	**M2S**	156	300.5	452.5	119	22	522.5	26	129	146	134	119
F 25 4	**S3**	**M3S**	195	320	495.5	142	27	591.5	34	160	158	160	142
F 25 4	**S3**	**M3L**	195	320	527.5	142	32	618.5	39	160	158	160	142

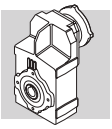

F 25...P(IEC)

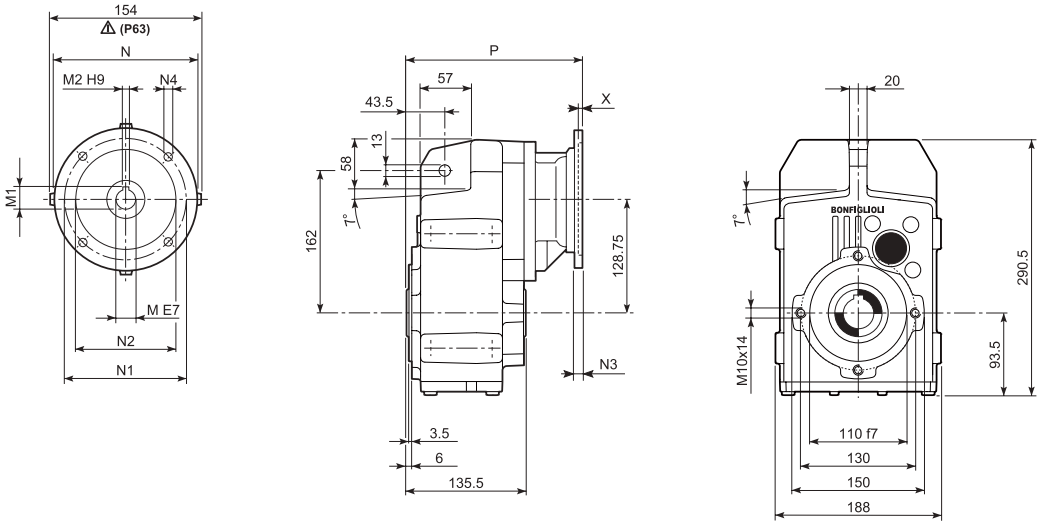

		M	M1	M2	N	N1	N2	N3	N4	X	P	
F 25 2/3	**P63**	11	12.8	4	140	115	95	—	M8x19	4	213	12
F 25 2/3	**P71**	14	16.3	5	160	130	110	—	M8x16	4.5	213	12
F 25 2/3	**P80**	19	21.8	6	200	165	130	—	M10x14.5	4	232.5	13
F 25 2/3	**P90**	24	27.3	8	200	165	130	—	M10x14.5	4	232.5	13
F 25 2/3	**P100**	28	31.3	8	250	215	180	—	M12x16	4.5	242.5	16
F 25 2/3	**P112**	28	31.3	8	250	215	180	—	M12x16	4.5	242.5	16
F 25 4	**P63**	11	12.8	4	140	115	95	—	M8x19	4	268.5	13
F 25 4	**P71**	14	16.3	5	160	130	110	—	M8x16	4.5	268.5	13
F 25 4	**P80**	19	21.8	6	200	165	130	—	M10x14.5	4	288	14
F 25 4	**P90**	24	27.3	8	200	165	130	—	M10x14.5	4	288	14
F 25 4	**P100**	28	31.3	8	250	215	180	—	M12x16	4.5	298	18
F 25 4	**P112**	28	31.3	8	250	215	180	—	M12x16	4.5	298	18

F 25...HS

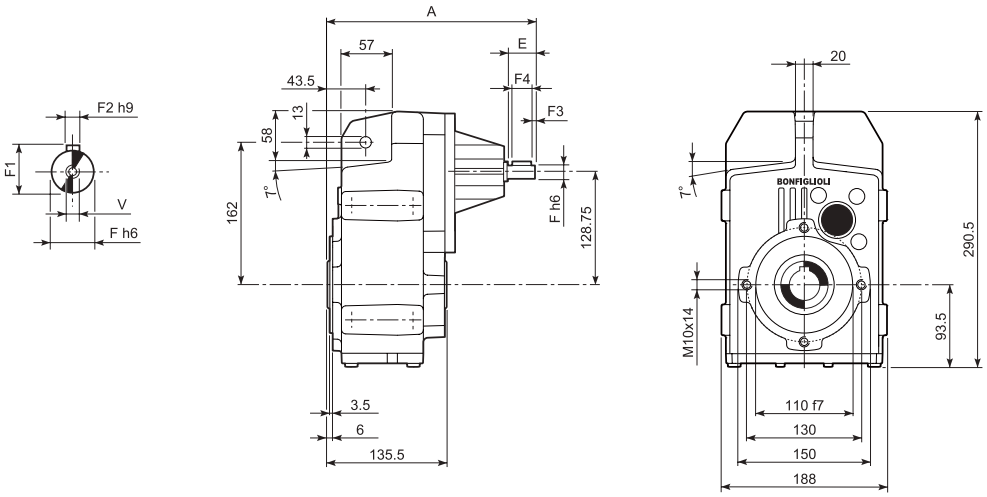

		A	E	F	F1	F2	F3	F4	V	
F 25 2	**HS**	263	40	19	21.5	6	2.5	35	M6x16	11.5
F 25 3		263	40	19	21.5	6	2.5	35	M6x16	11.5
F 25 4		275.5	40	16	18	5	2.5	35	M6x16	12.5

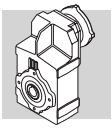

F 25...SK / SC

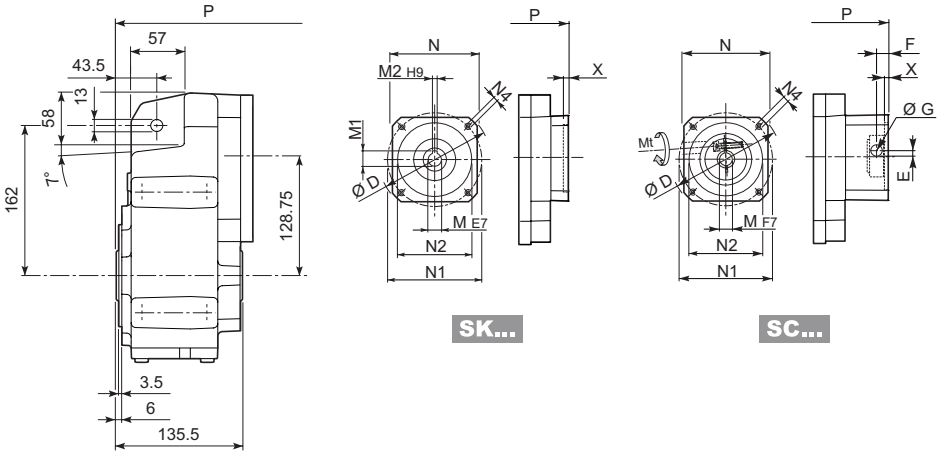

											2/3x		4x	
		D	M	M1	M2	N	N1	N2	N4	X	P		P	
F 25 2/3/4	SK 60A	102	11	12.8	4	82	75	60	M5x10	3.5	184.5	11	240	12
F 25 2/3/4	SK 60B	102	14	16.3	5	82	75	60	M5x10	4	191.5	12	247	13
F 25 2/3/4	SK 80A	115	14	16.3	5	90	100	80	M6x12	4	191.5	12	247	13
F 25 2/3/4	SK 80C	120	19	21.8	6	96	100	80	M6x12	4	232.5	13	288	14
F 25 2/3/4	SK 95A	130	14	16.3	5	102	115	95	M8x12	4	232.5	13	288	14
F 25 2/3/4	SK 95B	130	19	21.8	6	102	115	95	M8x12	4	232.5	13	288	14
F 25 2/3/4	SK 95C	130	24	27.3	8	102	115	95	M8x12	4	232.5	13	288	14
F 25 2/3/4	SK 110A	150	19	21.8	6	120	130	110	M8x12	5	232.5	13	288	14
F 25 2/3/4	SK 110B	150	24	27.3	8	120	130	110	M8x12	5	232.5	13	288	14

														2/3x		4x	
			Mt [Nm]	D	E	F	G	M	N	N1	N2	N4	X	P		P	
F 25 2/3/4	SC 60A	M6	15	102	7	12.5	12.5	11	82	75	60	M5x10	4	211.5	12	267	13
F 25 2/3/4	SC 60B	M6	15	102	7	12.5	12.5	14	82	75	60	M5x10	4	211.5	13	267	14
F 25 2/3/4	SC 80A	M6	15	115	6	12.5	12.5	14	90	100	80	M6x12	4	211.5	13	267	14
F 25 2/3/4	SC 80C	M6	15	120	15.5	14.5	17.75	19	96	100	80	M6x12	4	256	14	311.5	15
F 25 2/3/4	SC 95A	M6	15	130	16.5	15	17.75	14	102	115	95	M8x16	4	256	14	311.5	15
F 25 2/3/4	SC 95B	M6	15	130	16.5	15	17.75	19	102	115	95	M8x16	4	256	14	311.5	15
F 25 2/3/4	SC 95C	M6	15	130	16.5	15	17.75	24	102	115	95	M8x16	4	256	14	311.5	15
F 25 2/3/4	SC 110A	M6	15	150	16.5	16	17.75	19	120	130	110	M8x16	5	256	15	311.5	16
F 25 2/3/4	SC 110B	M6	15	150	16.5	16	17.75	24	120	130	110	M8x16	5	256	15	311.5	16

Bonfiglioli Riduttori

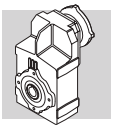

F 25

F 25...H

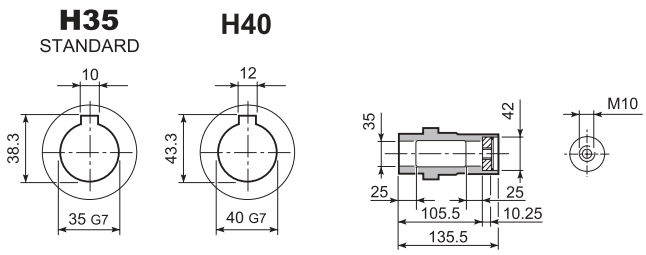

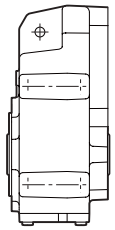

F 25...S

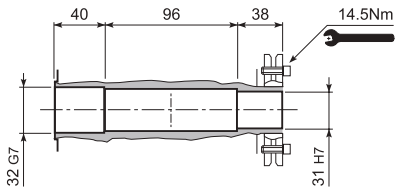

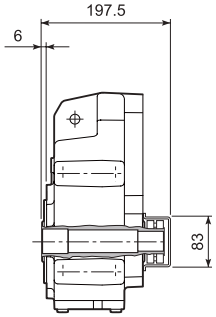

F 25...R

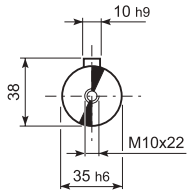

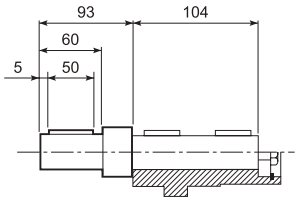

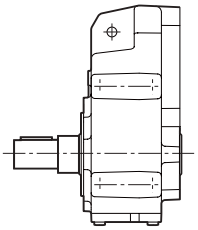

F 25...QF

	Ø
QF30	30
QF32	32

	$M_{n2\ max}$ [Nm]
F 25 QF30	350

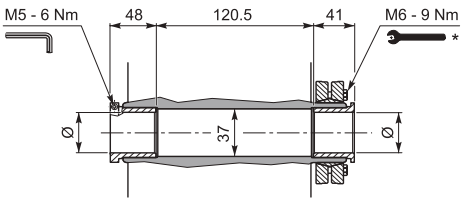

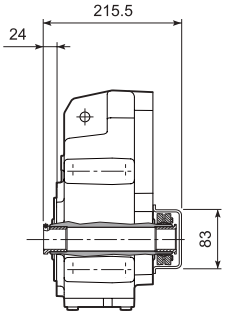

F 25...F...

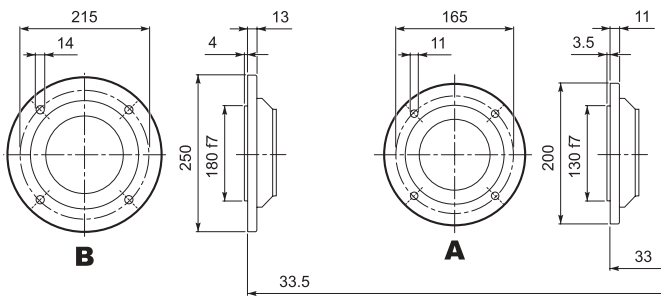

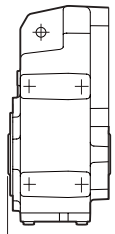

* Follow the MOUNTING INSTRUCTIONS supplied with the gearbox.

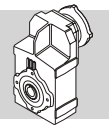

F 31...M

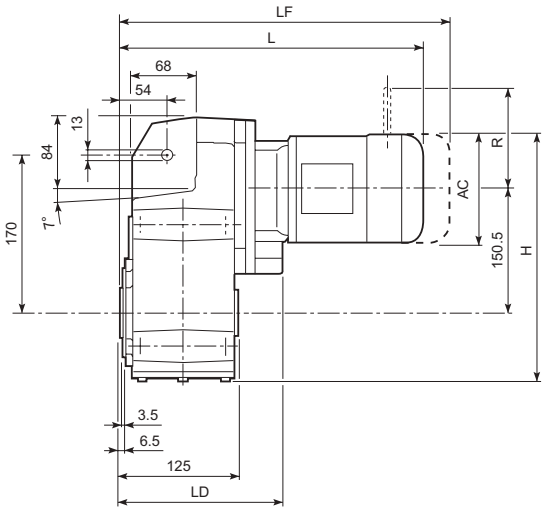

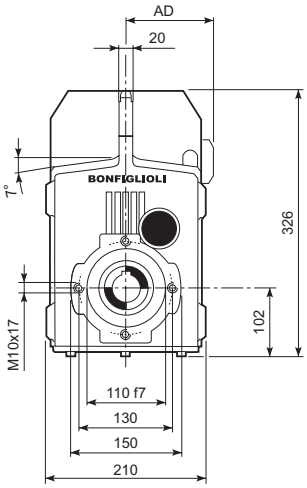

									M...FD M...FA		M...FD		M...FA	
			AC	H	L	LD	AD		LF		R	AD	R	AD
F 31 2/3	**S1**	**M1**	138	321.3	380.5	183.5	108	22	441.5	25	103	135	124	108
F 31 2/3	**S2**	**M2S**	156	330.3	409.5	195.5	119	26	479.5	30	129	146	134	119
F 31 2/3	**S3**	**M3S**	195	349.8	452.5	205.5	142	31	548.5	38	160	158	160	142
F 31 2/3	**S3**	**M3L**	195	349.8	484.5	205.5	142	38	575.5	45	160	158	160	142
F 31 2/3	**S4**	**M4**	258	381.3	592.5	—	193	72	701.5	79	204	210	200	193
F 31 2/3	**S4**	**M4L**	258	381.3	592.5	—	193	78	701.5	85	204	210	200	193
F 31 4	**S05**	**M05**	121	312.8	409	—	95	20	475	22	96	122	116	95
F 31 4	**S1**	**M1**	138	321.3	438	—	108	22	499	25	103	135	124	108
F 31 4	**S2**	**M2S**	156	330.3	467	—	119	26	537	31	129	146	134	119
F 31 4	**S3**	**M3S**	195	349.8	510	—	142	31	606	39	160	158	160	142
F 31 4	**S3**	**M3L**	195	349.8	542	—	142	38	633	46	160	158	160	142

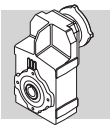

F 31...P(IEC)

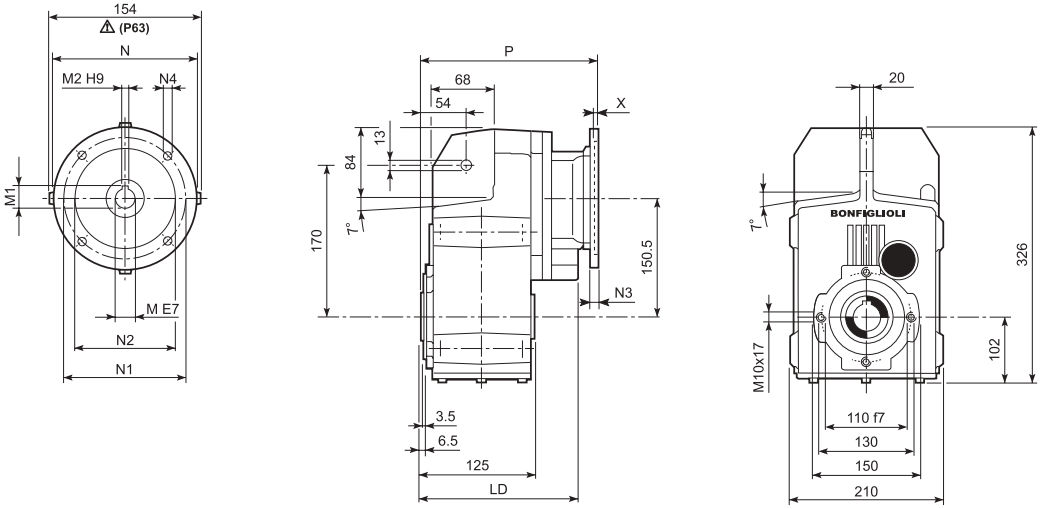

		LD	M	M1	M2	N	N1	N2	N3	N4	X	P	
F 31 2/3	**P63**	195.5	11	12.8	4	140	115	95	—	M8x19	4	225.5	17
F 31 2/3	**P71**	195.5	14	16.3	5	160	130	110	—	M8x16	4.5	225.5	17
F 31 2/3	**P80**	205.5	19	21.8	6	200	165	130	—	M10x14.5	4	245	18
F 31 2/3	**P90**	205.5	24	27.3	8	200	165	130	—	M10x14.5	4	245	17
F 31 2/3	**P100**	205.5	28	31.3	8	250	215	180	—	M12x16	4.5	255	21
F 31 2/3	**P112**	205.5	28	31.3	8	250	215	180	—	M12x16	4.5	255	21
F 31 2/3	**P132**	—	38	41.3	10	300	265	230	—	14	5	291.5	24
F 31 4	**P63**	—	11	12.8	4	140	115	95	—	M8x19	4	283	17
F 31 4	**P71**	—	14	16.3	5	160	130	110	—	M8x16	4.5	283	17
F 31 4	**P80**	—	19	21.8	6	200	165	130	—	M10x14.5	4	302.5	18
F 31 4	**P90**	—	24	27.3	8	200	165	130	—	M10x14.5	4	302.5	18
F 31 4	**P100**	—	28	31.3	8	250	215	180	—	M12x16	4.5	312.5	22
F 31 4	**P112**	—	28	31.3	8	250	215	180	—	M12x16	4.5	312.5	22

F 31...HS

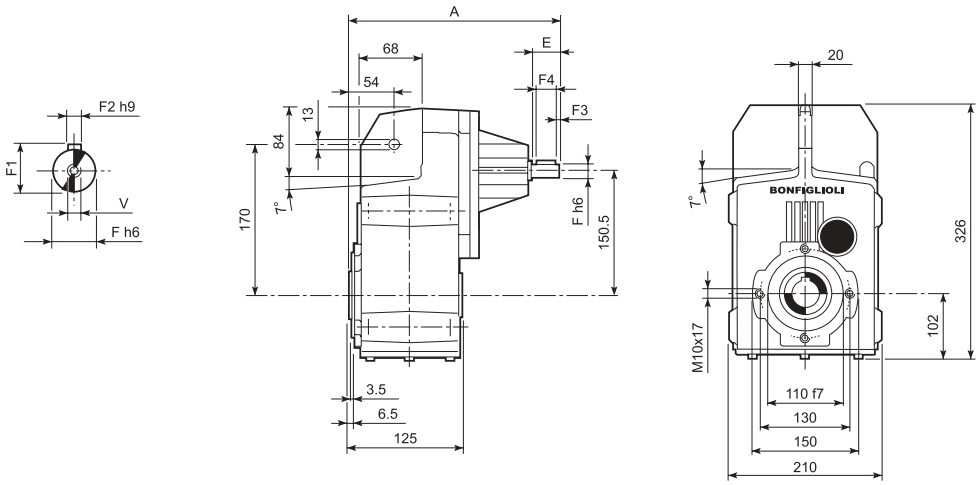

		A	E	F	F1	F2	F3	F4	V	
F 31 2	**HS**	275.5	40	19	21.5	6	2.5	35	M6x16	16.7
F 31 3		275.5	40	19	21.5	6	2.5	35	M6x16	16.7
F 31 4		290	40	16	18	5	2.5	35	M6x16	16.5

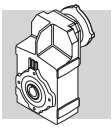

F 31...SK / SC

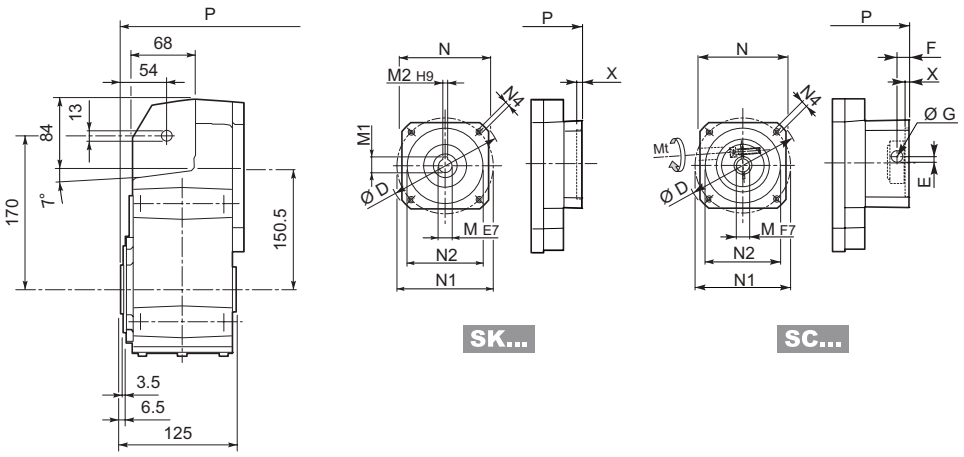

											2/3x		4x	
		D	M	M1	M2	N	N1	N2	N4	X	P		P	
F 31 2/3/4	**SK 60A**	102	11	12.8	4	82	75	60	M5x10	3.5	197	16	254.5	16
F 31 2/3/4	**SK 60B**	102	14	16.3	5	82	75	60	M5x10	4	204	17	261.5	17
F 31 2/3/4	**SK 80A**	115	14	16.3	5	90	100	80	M6x12	4	204	17	261.5	17
F 31 2/3/4	**SK 80C**	120	19	21.8	6	96	100	80	M6x12	4	245	18	302.5	18
F 31 2/3/4	**SK 95A**	130	14	16.3	5	102	115	95	M8x12	4	245	18	302.5	18
F 31 2/3/4	**SK 95B**	130	19	21.8	6	102	115	95	M8x12	4	245	18	302.5	18
F 31 2/3/4	**SK 95C**	130	24	27.3	8	102	115	95	M8x12	4	245	18	302.5	18
F 31 2/3/4	**SK 110A**	150	19	21.8	6	120	130	110	M8x12	5	245	18	302.5	18
F 31 2/3/4	**SK 110B**	150	24	27.3	8	120	130	110	M8x12	5	245	18	302.5	18
F 31 2/3	**SK 130A**	188	24	27.3	8	142	165	130	M10x20	5	245	18	—	—

													2/3x		4x	
			Mt [Nm]	D	E	F	G	M	N	N1	N2	N4	X	P		P	
F 31 2/3/4	**SC 60A**	M6	15	102	7	12.5	12.5	11	82	75	60	M5x10	4	224	17	281.5	17
F 31 2/3/4	**SC 60B**	M6	15	102	7	12.5	12.5	14	82	75	60	M5x10	4	224	18	281.5	18
F 31 2/3/4	**SC 80A**	M6	15	115	6	12.5	12.5	14	90	100	80	M6x12	4	224	18	281.5	18
F 31 2/3/4	**SC 80C**	M6	15	120	15.5	14.5	17.75	19	96	100	80	M6x12	4	268.5	19	326	19
F 31 2/3/4	**SC 95A**	M6	15	130	16.5	15	17.75	14	102	115	95	M8x16	4	268.5	19	326	19
F 31 2/3/4	**SC 95B**	M6	15	130	16.5	15	17.75	19	102	115	95	M8x16	4	268.5	19	326	19
F 31 2/3/4	**SC 95C**	M6	15	130	16.5	15	17.75	24	102	115	95	M8x16	4	268.5	19	326	19
F 31 2/3/4	**SC 110A**	M6	15	150	16.5	16	17.75	19	120	130	110	M8x16	5	268.5	20	326	20
F 31 2/3/4	**SC 110B**	M6	15	150	16.5	16	17.75	24	120	130	110	M8x16	5	268.5	20	326	20
F 31 2/3	**SC 130A**	M6	15	188	19	16	17.75	24	142	165	130	M10x20	5	268.5	21	—	—

Bonfiglioli Riduttori

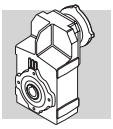

F 31

F 31...H

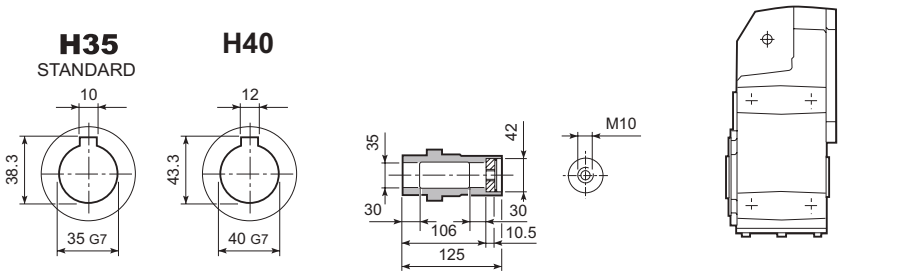

F 31...S

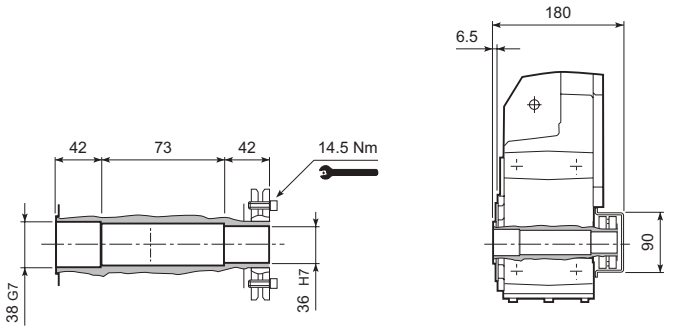

F 31...R

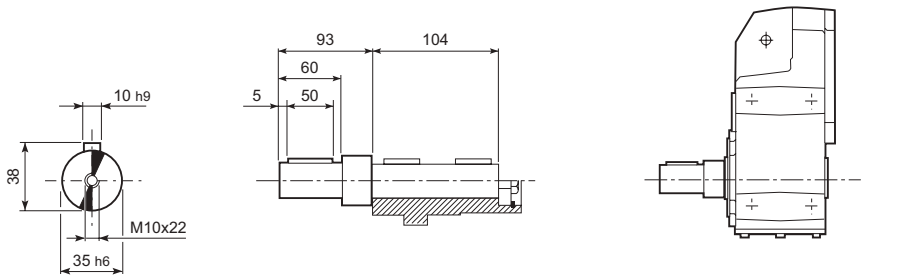

F 31...QF

	Ø
QF35	35
QF40	40

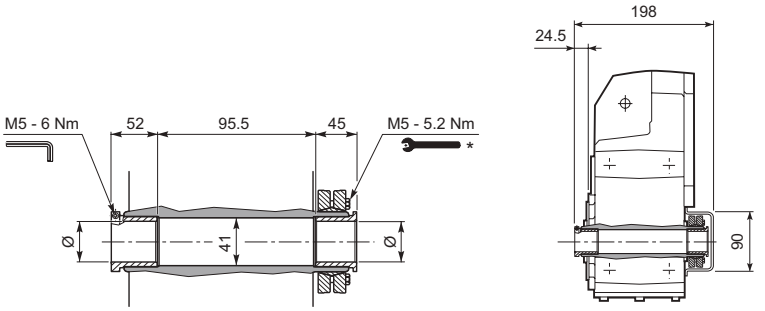

F 31...F...

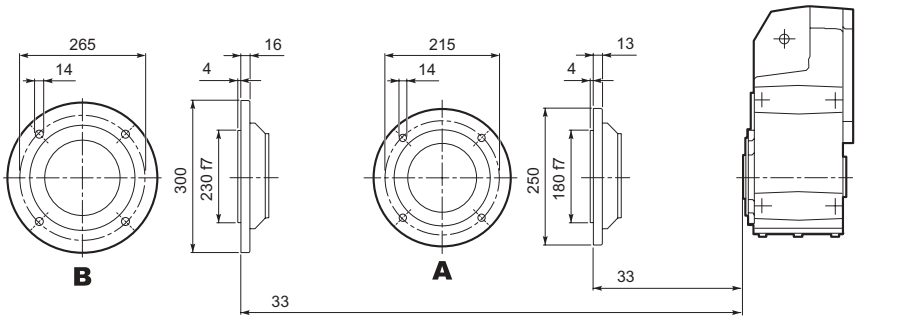

* Follow the MOUNTING INSTRUCTIONS supplied with the gearbox.

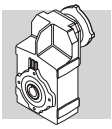

F 41...M

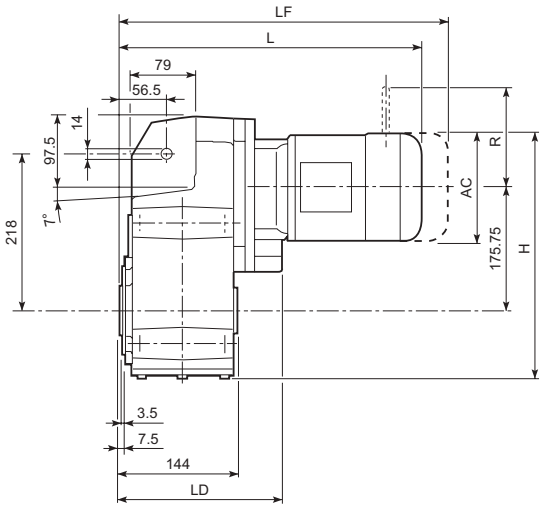

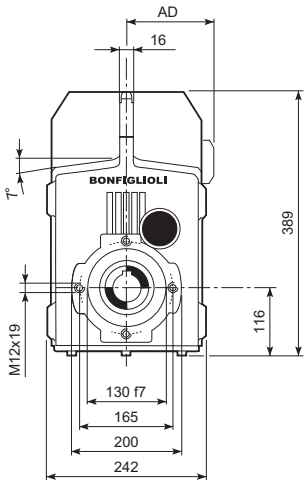

									M...FD M...FA		M...FD		M...FA	
			AC	H	L	LD	AD		LF		R	AD	R	AD
F 41 2/3	**S1**	**M1**	138	360.8	401	199.5	108	46	462	48	103	135	124	108
F 41 2/3	**S2**	**M2S**	156	369.8	430	215	119	49	500	53	129	146	134	119
F 41 2/3	**S3**	**M3S**	195	389.3	473	231	142	54	569	62	160	158	160	142
F 41 2/3	**S3**	**M3L**	195	389.3	505	231	142	62	596	69	160	158	160	142
F 41 2/3	**S4**	**M4**	258	420.8	613	—	193	96	722	114	226	210	217	193
F 41 2/3	**S4**	**M4LC**	258	420.8	648	—	193	104	747	122	226	210	217	193
F 41 4	**S05**	**M05**	231	352.3	433.5	—	95	45	499.5	46	96	122	116	95
F 41 4	**S1**	**M1**	138	360.8	462.5	—	108	47	523.5	49	103	135	124	108
F 41 4	**S2**	**M2S**	156	369.8	491.5	—	119	50	561.5	58	129	146	134	119
F 41 4	**S3**	**M3S**	195	389.3	534.5	—	142	55	630.5	62	160	158	160	142
F 41 4	**S3**	**M3L**	195	389.3	566.5	—	142	63	657.5	70	160	158	160	142

Bonfiglioli Riduttori

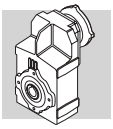

F 41...P(IEC)

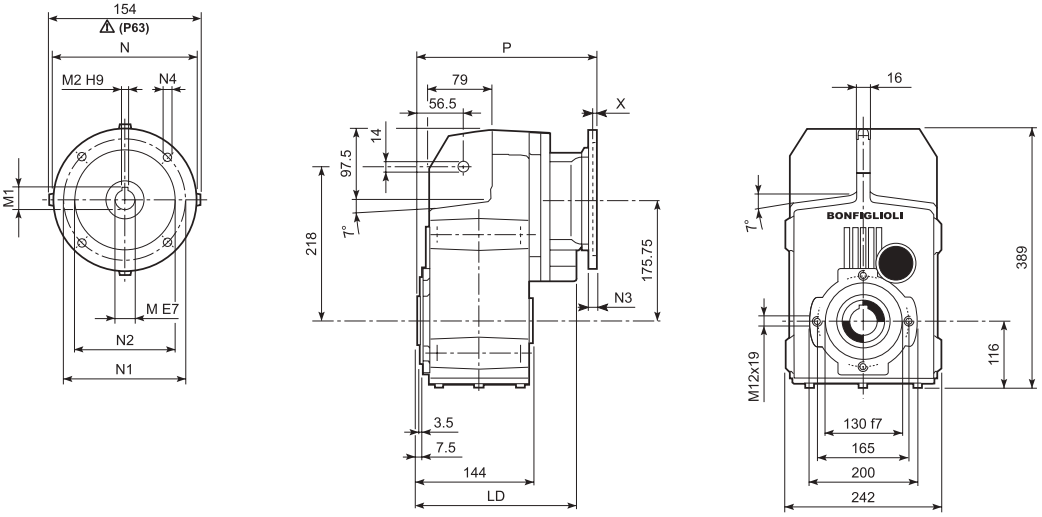

		LD	M	M1	M2	N	N1	N2	N3	N4	X	P	
F 41 2/3	**P63**	215	11	12.8	4	140	115	95	—	M8x19	4	246	42
F 41 2/3	**P71**	215	14	16.3	5	160	130	110	—	M8x16	4.5	246	42
F 41 2/3	**P80**	231	19	21.8	6	200	165	130	—	M10x14.5	4	265.5	43
F 41 2/3	**P90**	231	24	27.3	8	200	165	130	—	M10x14.5	4	265.5	43
F 41 2/3	**P100**	231	28	31.3	8	250	215	180	—	M12x16	4.5	275.5	47
F 41 2/3	**P112**	231	28	31.3	8	250	215	180	—	M12x16	4.5	275.5	47
F 41 2/3	**P132**	—	38	41.3	10	300	265	230	16	14	5	312	50
F 41 4	**P63**	—	11	12.8	4	140	115	95	—	M8x19	4	307.5	44
F 41 4	**P71**	—	14	16.3	5	160	130	110	—	M8x16	4.5	307.5	44
F 41 4	**P80**	—	19	21.8	6	200	165	130	—	M10x14.5	4	327	45
F 41 4	**P90**	—	24	27.3	8	200	165	130	—	M10x14.5	4	327	45
F 41 4	**P100**	—	28	31.3	8	250	215	180	—	M12x16	4.5	337	49
F 41 4	**P112**	—	28	31.3	8	250	215	180	—	M12x16	4.5	337	49

F 41...HS

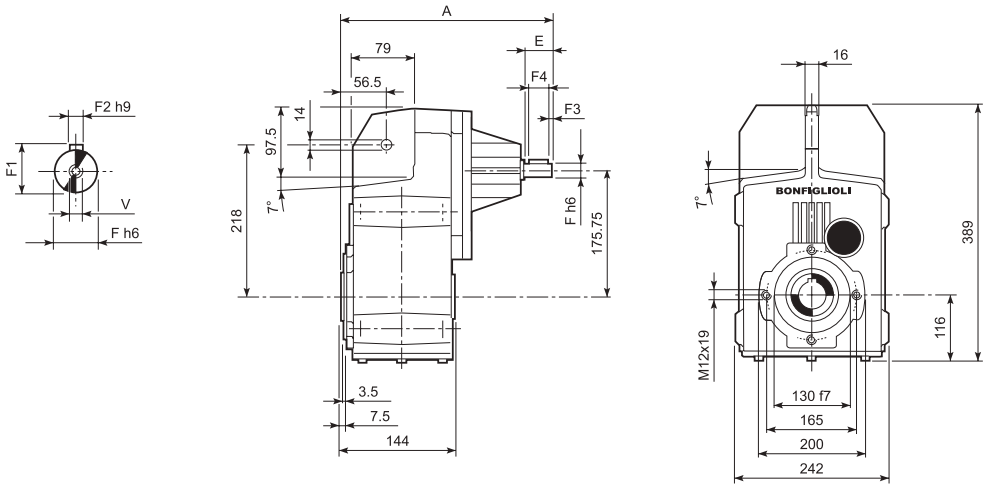

		A	E	F	F1	F2	F3	F4	V	
F 41 2	**HS**	335.5	50	24	27	8	2.5	45	M8x19	44.9
F 41 3		335.5	50	24	27	8	2.5	45	M8x19	46.4
F 41 4		357.5	40	19	21.5	6	2.5	35	M6x16	43.5

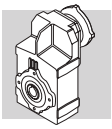

F 41...SK / SC

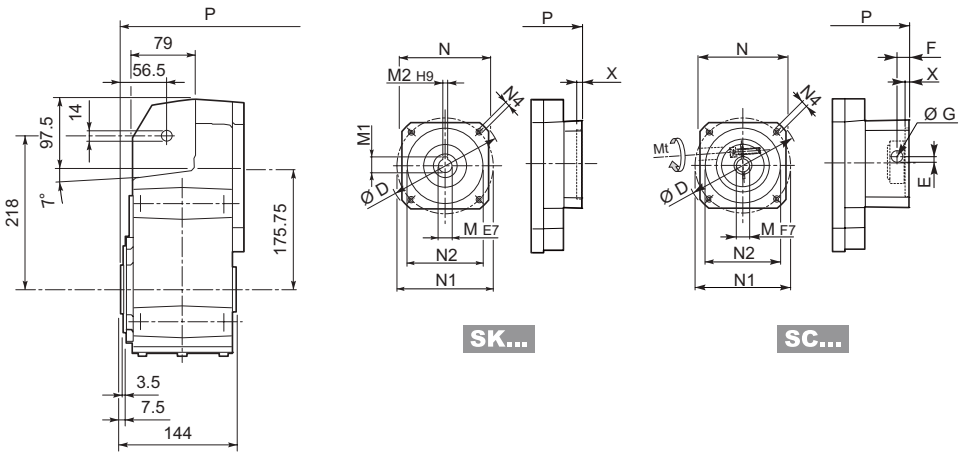

											2/3x		4x	
		D	M	M1	M2	N	N1	N2	N4	X	P		P	
F 41 4	**SK 60A**	102	11	12.8	4	82	75	60	M5x10	3.5	—	—	279	43
F 41 4	**SK 60B**	102	14	16.3	5	82	75	60	M5x10	4	—	—	286	44
F 41 4	**SK 80A**	115	14	16.3	5	90	100	80	M6x12	4	—	—	286	44
F 41 2/3	**SK 80B**	120	14	16.3	5	96	100	80	M6x12	4	265.5	43	—	—
F 41 2/3/4	**SK 80C**	120	19	21.8	6	96	100	80	M6x12	4	265.5	43	327	45
F 41 2/3/4	**SK 95A**	130	14	16.3	5	102	115	95	M8x12	4	265.5	43	327	45
F 41 2/3/4	**SK 95B**	130	19	21.8	6	102	115	95	M8x12	4	265.5	43	327	45
F 41 2/3/4	**SK 95C**	130	24	27.3	8	102	115	95	M8x12	4	265.5	43	327	45
F 41 2/3/4	**SK 110A**	150	19	21.8	6	120	130	110	M8x12	5	265.5	43	327	45
F 41 2/3/4	**SK 110B**	150	24	27.3	8	120	130	110	M8x12	5	265.5	43	327	45
F 41 2/3	**SK 130A**	188	24	27.3	8	142	165	130	M10x20	5	265.5	45	—	—
F 41 2/3	**SK 130B**	189	32	35.3	10	160	165	130	M10x20	5	312	47	—	—
F 41 2/3	**SK 180A**	240	32	35.3	10	192	215	180	M12x19	5	312	47	—	—
F 41 2/3	**SK 180B**	240	38	41.3	10	192	215	180	M12x19	5	312	47	—	—

														2/3x		4x	
			Mt [Nm]	D	E	F	G	M	N	N1	N2	N4	X	P		P	
F 41 4	**SC 60A**	M6	15	102	7	12.5	12.5	11	82	75	60	M5x10	4	—	—	306	44
F 41 4	**SC 60B**	M6	15	102	7	12.5	12.5	14	82	75	60	M5x10	4	—	—	306	45
F 41 4	**SC 80A**	M6	15	115	6	12.5	12.5	14	90	100	80	M6x12	4	—	—	306	45
F 41 2/3	**SC 80B**	M6	15	120	15.5	14.5	17.75	14	96	100	80	M6x12	4	289	44	—	—
F 41 2/3/4	**SC 80C**	M6	15	120	15.5	14.5	17.75	19	96	100	80	M6x12	4	289	44	350.5	46
F 41 2/3/4	**SC 95A**	M6	15	130	16.5	15	17.75	14	102	115	95	M8x16	4	289	44	350.5	46
F 41 2/3/4	**SC 95B**	M6	15	130	16.5	15	17.75	19	102	115	95	M8x16	4	289	44	350.5	46
F 41 2/3/4	**SC 95C**	M6	15	130	16.5	15	17.75	24	102	115	95	M8x16	4	289	44	350.5	46
F 41 2/3/4	**SC 110A**	M6	15	150	16.5	16	17.75	19	120	130	110	M8x16	5	289	45	350.5	47
F 41 2/3/4	**SC 110B**	M6	15	150	16.5	16	17.75	24	120	130	110	M8x16	5	289	45	350.5	47
F 41 2/3	**SC 130A**	M6	15	188	19	16	17.75	24	142	165	130	M10x20	5	289	46	—	—
F 41 2/3	**SC 130B**	M8	36	189	20	17	17.75	32	160	165	130	M10x20	5	335	50	—	—
F 41 2/3	**SC 180A**	M8	36	240	20	17.5	17.75	32	192	215	180	M12x24	5	339	50	—	—
F 41 2/3	**SC 180B**	M8	36	240	20	17.5	17.75	38	192	215	180	M12x24	5	339	50	—	—

Bonfiglioli Riduttori

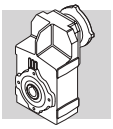

F 41

F 41...H

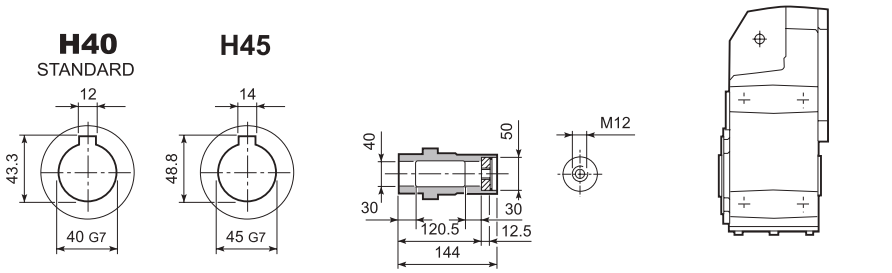

F 41...S

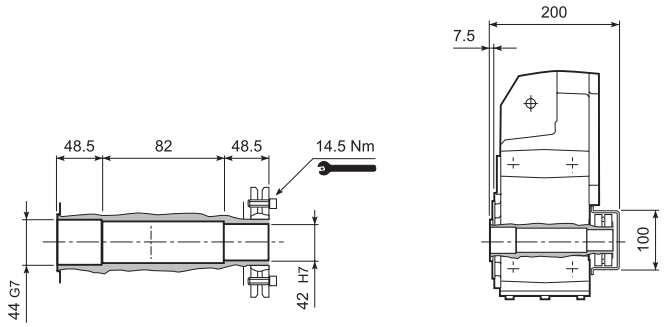

F 41...R

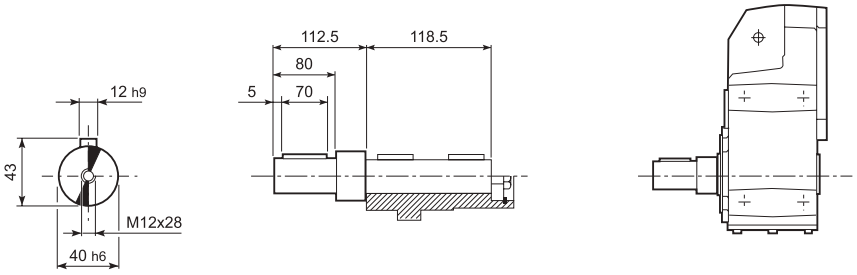

F 41...QF

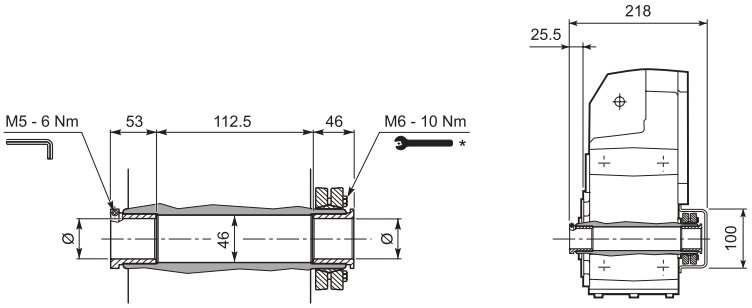

	Ø
QF42	42
QF45	45

	$M_{n2\ max}$ [Nm]
F 41 QF42	850
F 41 QF45	1000

F 41...F...

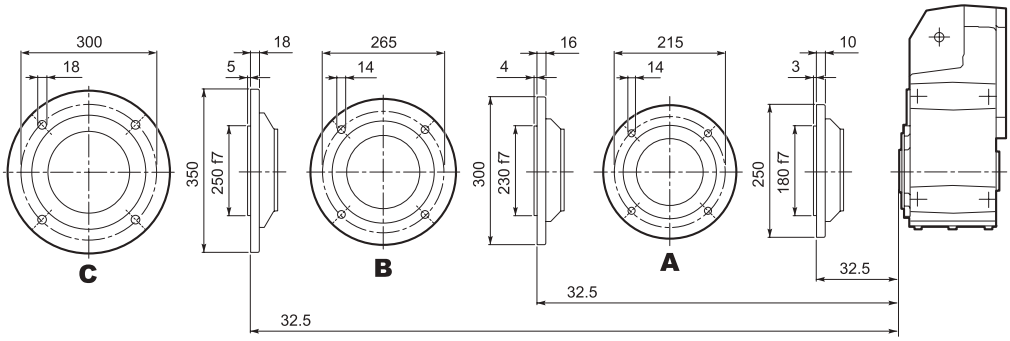

* Follow the MOUNTING INSTRUCTIONS supplied with the gearbox.

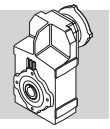

F 51...M

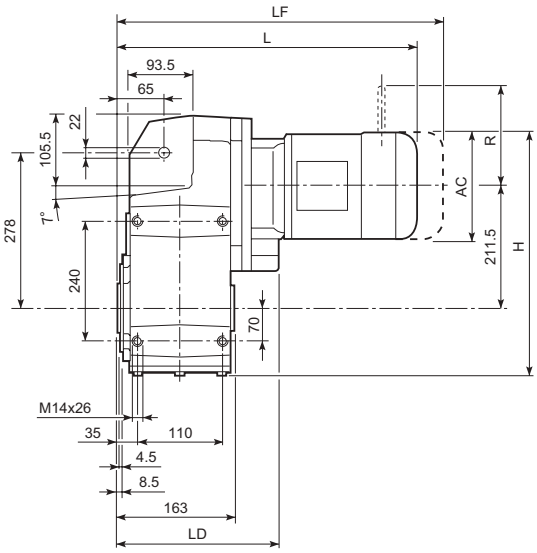

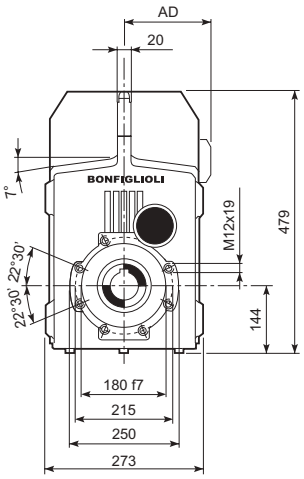

								M...FD M...FA		M...FD		M...FA	
			AC	H	L	LD	AD		LF		R	AD	R	AD
F 51 2/3	**S1**	**M1**	138	424	423	—	108	73	484	76	103	135	124	108
F 51 2/3	**S2**	**M2S**	156	433	452	238	119	73	522	76	129	146	134	119
F 51 2/3	**S3**	**M3S**	195	452.5	495	253	142	77	591	85	160	158	160	142
F 51 2/3	**S3**	**M3L**	195	452.5	527	253	142	85	618	92	160	158	160	142
F 51 2/3	**S4**	**M4**	258	484	635	238	193	119	744	137	226	210	217	193
F 51 2/3	**S4**	**M4LC**	258	484	670	238	193	127	769	145	226	210	217	193
F 51 2/3	**S5**	**M5S**	310	510	721.5	—	245	153	861.5	188	266	245	247	245
F 51 2/3	**S5**	**M5L**	310	510	765.5	—	245	169	905.5	204	266	245	247	245
F 51 4	**S1**	**M1**	138	424	494.5	—	108	75	555.5	78	103	135	124	108
F 51 4	**S2**	**M2S**	156	433	523.5	—	119	79	593.5	83	129	146	134	119
F 51 4	**S3**	**M3S**	195	452.5	566.5	—	142	84	662.5	91	160	158	160	142
F 51 4	**S3**	**M3L**	195	452.5	598.5	—	142	91	689.5	98	160	158	160	142

Bonfiglioli Riduttori

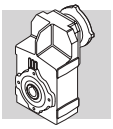

F 51...P(IEC)

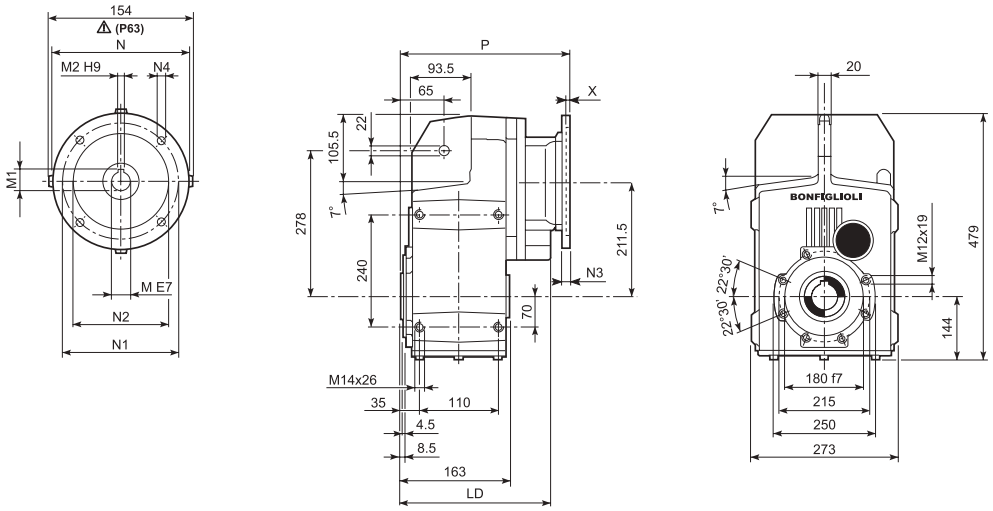

		LD	M	M1	M2	N	N1	N2	N3	N4	X	P	
F 51 2/3	**P63**	238	11	12.8	4	140	115	95	—	M8x19	4	268	65
F 51 2/3	**P71**	238	14	16.3	5	160	130	110	—	M8x16	4.5	268	65
F 51 2/3	**P80**	253	19	21.8	6	200	165	130	—	M10x14.5	4	287.5	67
F 51 2/3	**P90**	253	24	27.3	8	200	165	130	—	M10x14.5	4	287.5	67
F 51 2/3	**P100**	238	28	31.3	8	250	215	180	—	M12x16	4.5	297.5	71
F 51 2/3	**P112**	238	28	31.3	8	250	215	180	—	M12x16	4.5	297.5	71
F 51 2/3	**P132**	238	38	41.3	10	300	265	230	16	14	5	334	74
F 51 2/3	**P160**	—	42	45.3	12	350	300	250	23	18	5.5	384.5	78
F 51 2/3	**P180**	—	48	51.8	14	350	300	250	23	18	5.5	384.5	78
F 51 4	**P63**	—	11	12.8	4	140	115	95	—	M8x19	4	339.5	70
F 51 4	**P71**	—	14	16.3	5	160	130	110	—	M8x16	4.5	339.5	70
F 51 4	**P80**	—	19	21.8	6	200	165	130	—	M10x14.5	4	359	71
F 51 4	**P90**	—	24	27.3	8	200	165	130	—	M10x14.5	4	359	71
F 51 4	**P100**	—	28	31.3	8	250	215	180	—	M12x16	4.5	369	75
F 51 4	**P112**	—	28	31.3	8	250	215	180	—	M12x16	4.5	369	75

F 51...HS

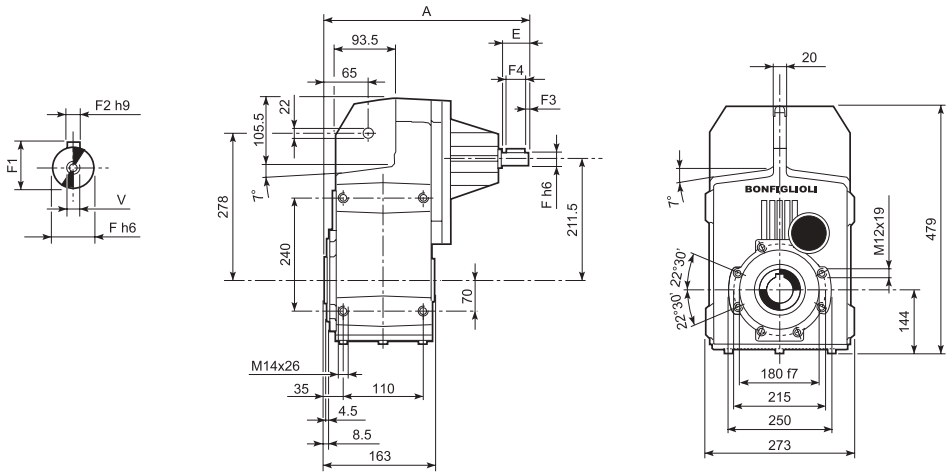

		A	E	F	F1	F2	F3	F4	V	
F 51 2	**HS**	357.5	50	24	27	8	2.5	45	M8x19	65
F 51 3		357.5	50	24	27	8	2.5	45	M8x19	68
F 51 4		389.5	40	19	21.5	6	2.5	35	M6x16	70

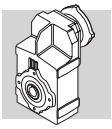

F 51...SK / SC

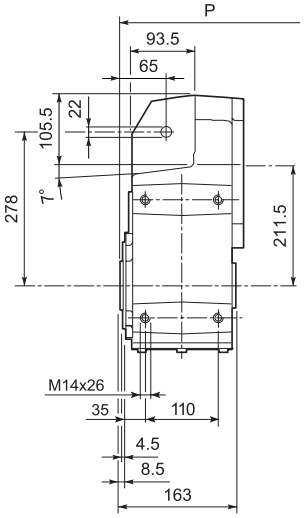

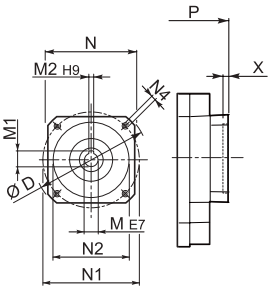

SK...

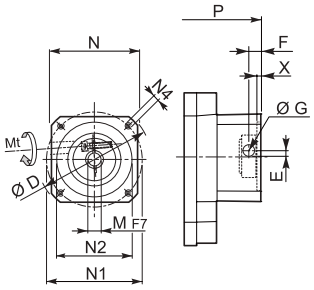

SC...

											2/3x		4x	
		D	M	M1	M2	N	N1	N2	N4	X	P		P	
F 51 2/3	SK 80B	120	14	16.3	5	96	100	80	M6x12	4	287.5	67	—	—
F 51 2/3/4	SK 80C	120	19	21.8	6	96	100	80	M6x12	4	287.5	67	359	71
F 51 2/3/4	SK 95A	130	14	16.3	5	102	115	95	M8x12	4	287.5	67	359	71
F 51 2/3/4	SK 95B	130	19	21.8	6	102	115	95	M8x12	4	287.5	67	359	71
F 51 2/3/4	SK 95C	130	24	27.3	8	102	115	95	M8x12	4	287.5	67	359	71
F 51 2/3/4	SK 110A	150	19	21.8	6	120	130	110	M8x12	5	287.5	67	359	71
F 51 2/3/4	SK 110B	150	24	27.3	8	120	130	110	M8x12	5	287.5	67	359	71
F 51 2/3/4	SK 130A	188	24	27.3	8	142	165	130	M10x20	5	287.5	69	359	73
F 51 2/3	SK 130B	189	32	35.3	10	160	165	130	M10x20	5	334	75	—	—
F 51 2/3	SK 180A	240	32	35.3	10	192	215	180	M12x19	5	334	75	—	—
F 51 2/3	SK 180B	240	38	41.3	10	192	215	180	M12x19	5	334	75	—	—

													2/3x		4x	
			Mt [Nm]	D	E	F	G	M	N	N1	N2	N4	X	P		P	
F 51 2/3	SC 80B	M6	15	120	15.5	14.5	17.75	14	96	100	80	M6x12	4	311	70	—	—
F 51 2/3/4	SC 80C	M6	15	120	15.5	14.5	17.75	19	96	100	80	M6x12	4	311	70	382.5	74
F 51 2/3/4	SC 95A	M6	15	130	16.5	15	17.75	14	102	115	95	M8x16	4	311	70	382.5	74
F 51 2/3/4	SC 95B	M6	15	130	16.5	15	17.75	19	102	115	95	M8x16	4	311	70	382.5	74
F 51 2/3/4	SC 95C	M6	15	130	16.5	15	17.75	24	102	115	95	M8x16	4	311	70	382.5	74
F 51 2/3/4	SC 110A	M6	15	150	16.5	16	17.75	19	120	130	110	M8x16	5	311	71	382.5	75
F 51 2/3/4	SC 110B	M6	15	150	16.5	16	17.75	24	120	130	110	M8x16	5	311	71	382.5	75
F 51 2/3/4	SC 130A	M6	15	188	19	16	17.75	24	142	165	130	M10x20	5	311	72	382.5	76
F 51 2/3	SC 130B	M8	36	189	20	17	17.75	32	160	165	130	M10x20	5	357	75	—	—
F 51 2/3	SC 180A	M8	36	240	20	17.5	17.75	32	192	215	180	M12x24	5	361	75	—	—
F 51 2/3	SC 180B	M8	36	240	20	17.5	17.75	38	192	215	180	M12x24	5	361	75	—	—

Bonfiglioli Riduttori

F 51

F 51...H

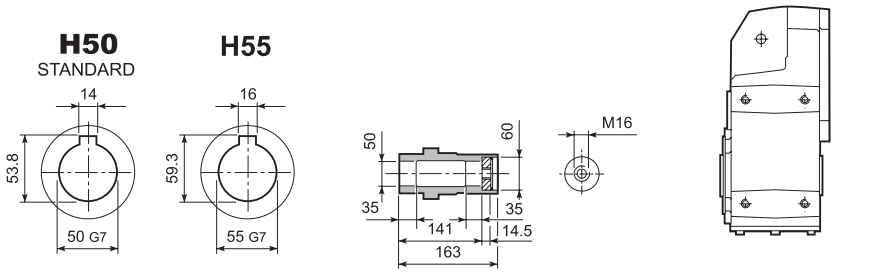

F 51...S

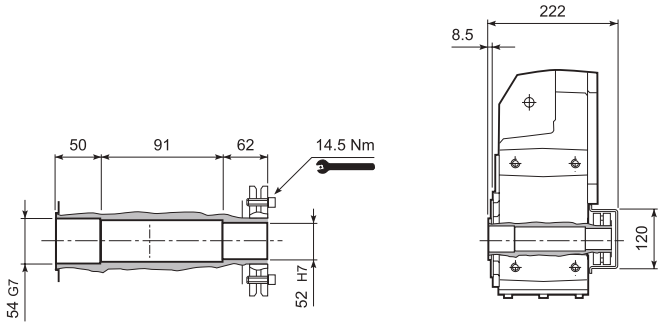

F 51...R

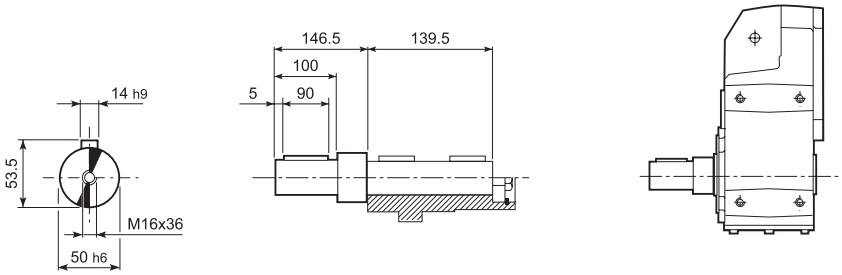

F 51...QF

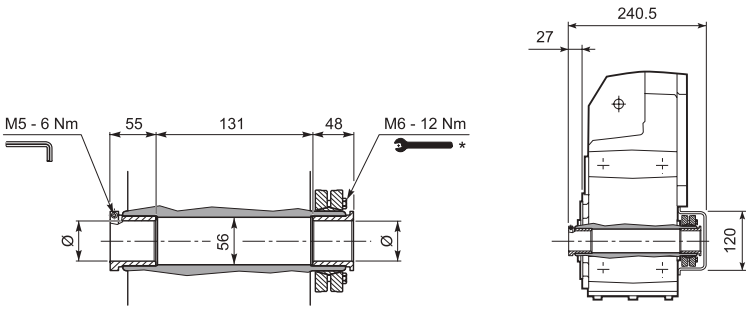

	Ø
QF50	50
QF55	55

	$M_{n2\ max}$ [Nm]
F 51 QF50	1750

F 51...F...

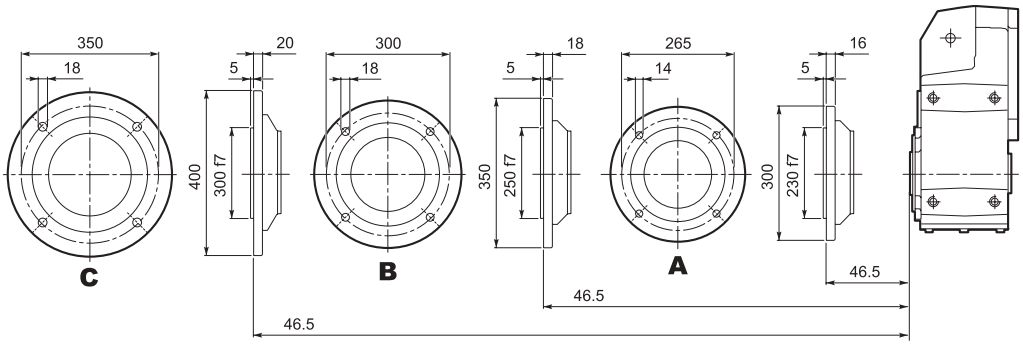

* Follow the MOUNTING INSTRUCTIONS supplied with the gearbox.

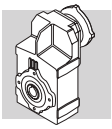

F 60...M

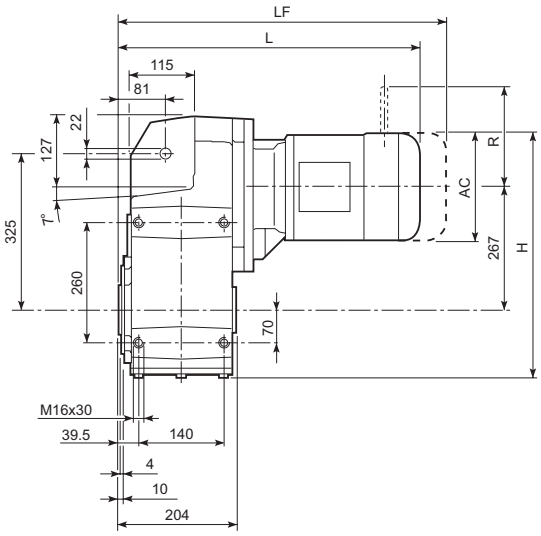

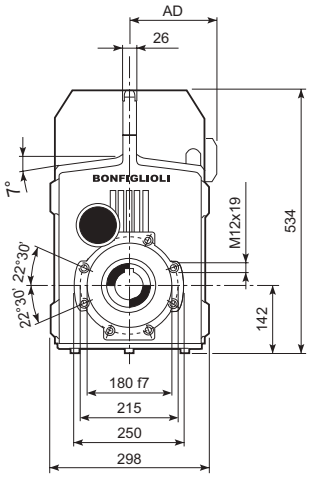

								M...FD M...FA		M...FD		M...FA	
			AC	H	L	AD		LF		R	AD	R	AD
F 60 3	**S2**	**M2S**	156	487	486.5	119	114	556.5	121	129	146	134	119
F 60 3	**S3**	**M3S**	195	506.5	529.5	142	114	625.5	122	160	158	160	142
F 60 3	**S3**	**M3L**	195	506.5	561.5	142	122	652.5	129	160	158	160	142
F 60 3	**S4**	**M4**	258	538	669.5	193	156	777.5	174	226	210	217	193
F 60 3	**S4**	**M4LC**	258	538	704.5	193	164	802.5	182	226	210	217	193
F 60 3	**S5**	**M5S**	310	564	756	245	184	896	214	266	245	247	245
F 60 3	**S5**	**M5L**	310	564	800	245	200	940	230	266	245	247	245
F 60 4	**S1**	**M1**	138	478	528	108	113	589	116	103	135	124	108
F 60 4	**S2**	**M2S**	156	487	557	119	117	627	121	129	146	134	119
F 60 4	**S3**	**M3S**	195	506.5	600	142	122	696	129	160	158	160	142
F 60 4	**S3**	**M3L**	195	506.5	632	142	129	723	136	160	158	160	142

Bonfiglioli Riduttori

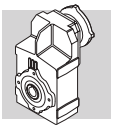

F 60...P(IEC)

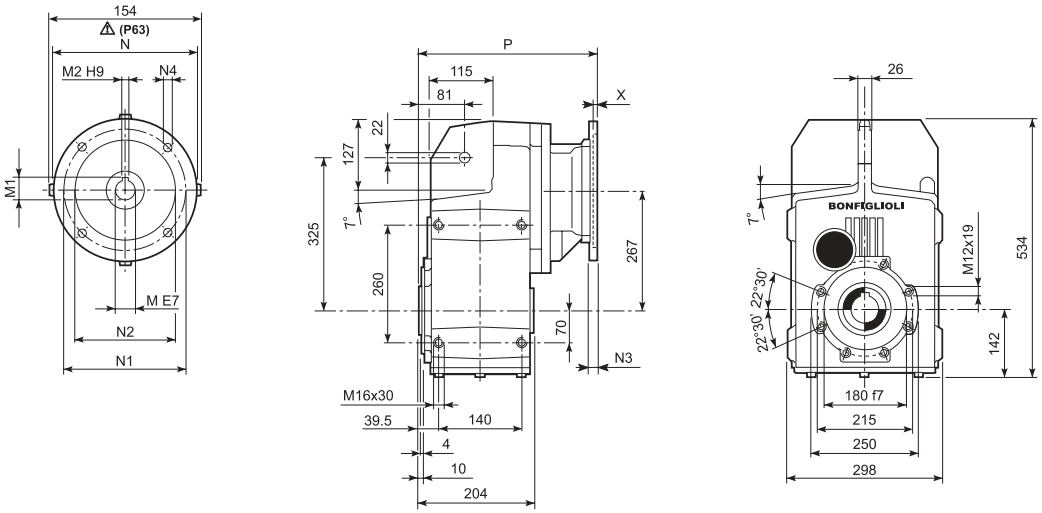

		M	M1	M2	N	N1	N2	N3	N4	X	P	
F 60 3	**P63**	11	12.8	4	140	115	95	—	M8x19	4	302.5	103
F 60 3	**P71**	14	16.3	5	160	130	110	—	M8x16	4.5	302.5	103
F 60 3	**P80**	19	21.8	6	200	165	130	—	M10x14.5	4	322	104
F 60 3	**P90**	24	27.3	8	200	165	130	—	M10x14.5	4	322	104
F 60 3	**P100**	28	31.3	8	250	215	180	—	M12x16	4.5	331	108
F 60 3	**P112**	28	31.3	8	250	215	180	—	M12x16	4.5	331	108
F 60 3	**P132**	38	41.3	10	300	265	230	16	14	5	367.5	111
F 60 3	**P160**	42	45.3	12	350	300	250	23	18	5.5	419	116
F 60 3	**P180**	48	51.8	14	350	300	250	23	18	5.5	419	116
F 60 4	**P63**	11	12.8	4	140	115	95	—	M8x19	4	373	108
F 60 4	**P71**	14	16.3	5	160	130	110	—	M8x16	4.5	373	108
F 60 4	**P80**	19	21.8	6	200	165	130	—	M10x14.5	4	392.5	110
F 60 4	**P90**	24	27.3	8	200	165	130	—	M10x14.5	4	392.5	110
F 60 4	**P100**	28	31.3	8	250	215	180	—	M12x16	4.5	402.5	114
F 60 4	**P112**	28	31.3	8	250	215	180	—	M12x16	4.5	402.5	114

F 60...HS

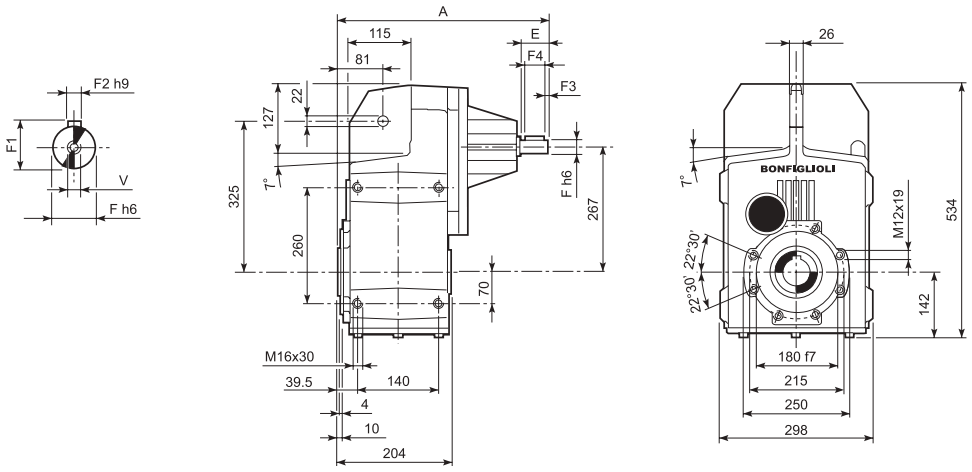

		A	E	F	F1	F2	F3	F4	V	
F 60 3	**HS**	419	60	28	31	8	5.0	50	M10x22	108
F 60 4		462.5	50	24	27	8	2.5	45	M8x19	105

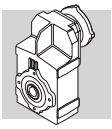

F 60...SK / SC

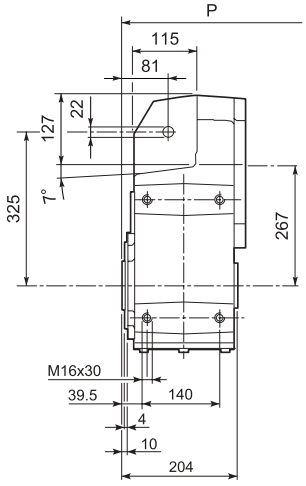

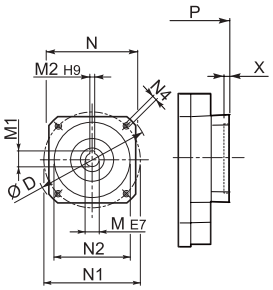

SK...

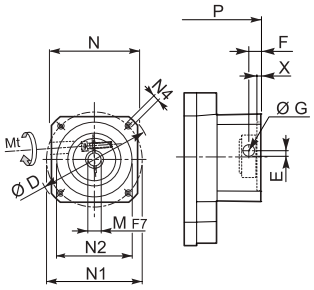

SC...

											2/3x		4x	
		D	M	M1	M2	N	N1	N2	N4	X	P		P	
F 60 4	**SK 80B**	120	14	16.3	5	96	100	80	M6x12	4	—	—	392.5	109
F 60 3/4	**SK 80C**	120	19	21.8	6	96	100	80	M6x12	4	322	106	392.5	112
F 60 3/4	**SK 95A**	130	14	16.3	5	102	115	95	M8x12	4	322	106	392.5	112
F 60 3/4	**SK 95B**	130	19	21.8	6	102	115	95	M8x12	4	322	106	392.5	112
F 60 3/4	**SK 95C**	130	24	27.3	8	102	115	95	M8x12	4	322	106	392.5	112
F 60 3/4	**SK 110A**	140	19	21.8	6	120	130	110	M8x12	5	322	106	392.5	112
F 60 3/4	**SK 110B**	140	24	27.3	8	120	130	110	M8x12	5	322	106	392.5	112
F 60 3/4	**SK 130A**	188	24	27.3	8	142	165	130	M10x20	5	322	108	392.5	112
F 60 3	**SK 130B**	189	32	35.3	10	160	165	130	M10x20	5	368.5	109	—	—
F 60 3	**SK 180A**	240	32	35.3	10	192	215	180	M12x19	5	368.5	109	—	—
F 60 3	**SK 180B**	240	38	41.3	10	192	215	180	M12x19	5	368.5	109	—	—

													2/3x		4x	
			Mt [Nm]	D	E	F	G	M	N	N1	N2	N4	X	P		P	
F 60 4	**SC 80B**	M6	15	120	15.5	14.5	17.75	14	96	100	80	M6x12	4	—	—	416	113
F 60 3/4	**SC 80C**	M6	15	120	15.5	14.5	17.75	19	96	100	80	M6x12	4	345.5	107	416	113
F 60 3/4	**SC 95A**	M6	15	130	16.5	15	17.75	14	102	115	95	M8x16	4	345.5	107	416	113
F 60 3/4	**SC 95B**	M6	15	130	16.5	15	17.75	19	102	115	95	M8x16	4	345.5	107	416	113
F 60 3/4	**SC 95C**	M6	15	130	16.5	15	17.75	24	102	115	95	M8x16	4	345.5	107	416	113
F 60 3/4	**SC 110A**	M6	15	140	16.5	16	17.75	19	120	130	110	M8x16	5	345.5	108	416	113
F 60 3/4	**SC 110B**	M6	15	140	16.5	16	17.75	24	120	130	110	M8x16	5	345.5	108	416	113
F 60 3/4	**SC 130A**	M6	15	188	19	16	17.75	24	142	165	130	M10x20	5	345.5	109	416	115
F 60 3	**SC 130B**	M8	36	189	20	17	17.75	32	160	165	130	M10x20	5	390.5	112	—	—
F 60 3	**SC 180A**	M8	36	240	20	17.5	17.75	32	192	215	180	M12x24	5	394.5	112	—	—
F 60 3	**SC 180B**	M8	36	240	20	17.5	17.75	38	192	215	180	M12x24	5	394.5	112	—	—

Bonfiglioli Riduttori

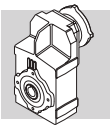

F 60

F 60...H

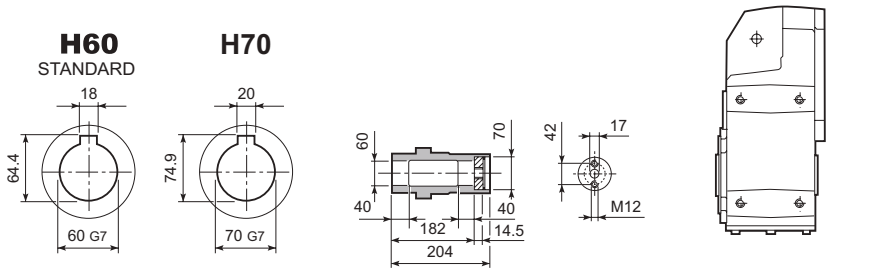

F 60...S

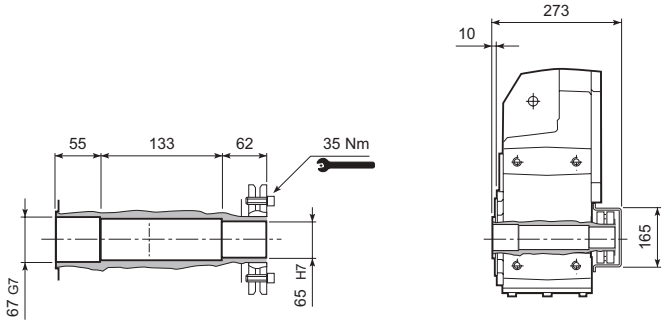

F 60...R

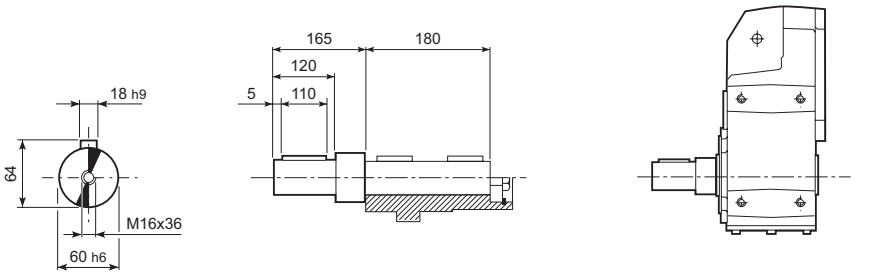

F 60...QF

	Ø
QF60	60
QF65	65
QF70	70

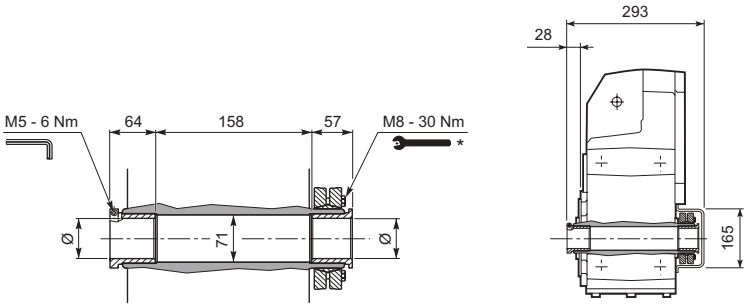

F 60...F...

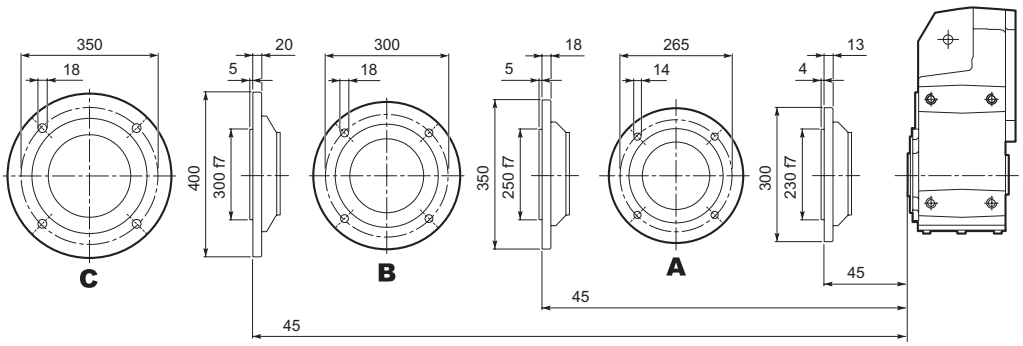

* Follow the MOUNTING INSTRUCTIONS supplied with the gearbox.

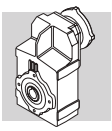

F 70...M

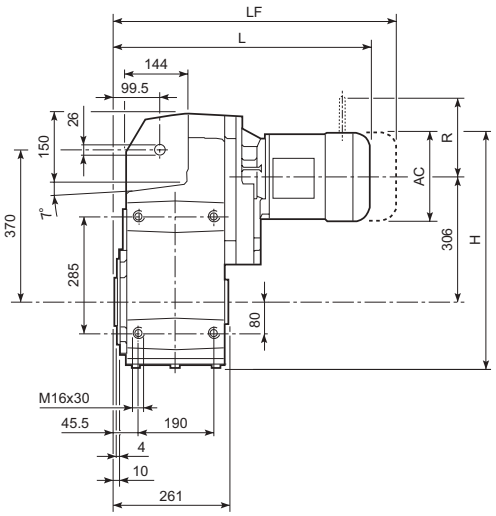

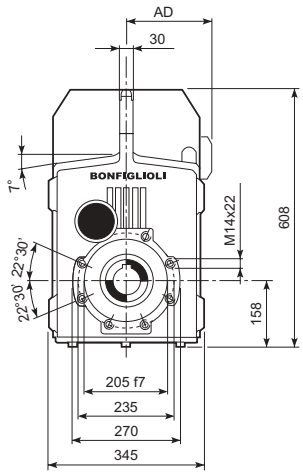

								M...FD M...FA		M...FD		M...FA	
			AC	H	L	AD		LF		R	AD	R	AD
F 70 3	**S2**	**M2S**	156	542	552	119	173	622	177	129	146	134	119
F 70 3	**S3**	**M3S**	195	561.5	595	142	178	691	186	160	158	160	142
F 70 3	**S3**	**M3L**	195	561.5	627	142	186	718	193	160	158	160	142
F 70 3	**S4**	**M4**	258	593	735	193	220	844	238	226	210	217	193
F 70 3	**S4**	**M4LC**	258	593	770	193	228	869	246	226	210	217	193
F 70 3	**S5**	**M5S**	310	619	821.5	245	248	961.5	278	266	245	247	245
F 70 3	**S5**	**M5L**	310	619	865.5	245	264	1005.5	294	266	245	247	245
F 70 4	**S1**	**M1**	138	533	574	108	173	635	176	103	135	124	108
F 70 4	**S2**	**M2S**	156	542	603	119	177	673	180	129	146	134	119
F 70 4	**S3**	**M3S**	195	561.5	646	142	181	742	189	160	158	160	142
F 70 4	**S3**	**M3L**	195	561.5	678	142	189	769	196	160	158	160	142
F 70 4	**S4**	**M4**	258	593	786	193	223	895	241	226	210	217	193
F 70 4	**S4**	**M4LC**	258	593	821	193	231	920	249	226	210	217	193

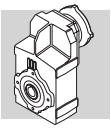

F 70...P(IEC)

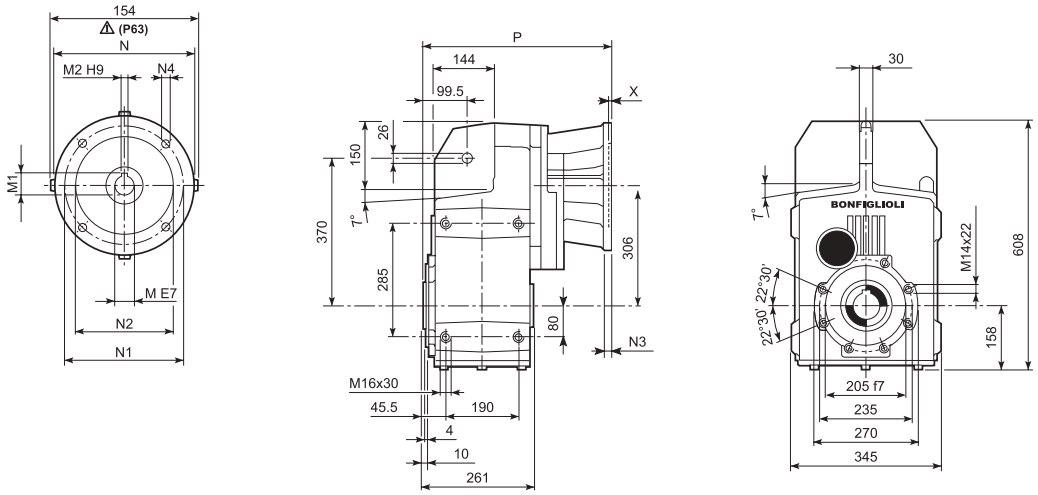

		M	M1	M2	N	N1	N2	N3	N4	X	P	
F 70 3	**P80**	19	21.8	6	200	165	130	—	M10x14.5	4	387.5	167
F 70 3	**P90**	24	27.3	8	200	165	130	—	M10x14.5	4	387.5	167
F 70 3	**P100**	28	31.3	8	250	215	180	—	M12x16	4.5	397.5	171
F 70 3	**P112**	28	31.3	8	250	215	180	—	M12x16	4.5	397.5	171
F 70 3	**P132**	38	41.3	10	300	265	230	16	14	5	434	173
F 70 3	**P160**	42	45.3	12	350	300	250	23	18	6	489.5	185
F 70 3	**P180**	48	51.8	14	350	300	250	23	18	6	489.5	185
F 70 3	**P200**	55	59.3	16	400	350	300	—	M16x25	7	514.5	206
F 70 4	**P63**	11	12.8	4	140	115	95	—	M8x19	4	419	168
F 70 4	**P71**	14	16.3	5	160	130	110	—	M8x16	4.5	419	168
F 70 4	**P80**	19	21.8	6	200	165	130	—	M10x14.5	4	438.5	170
F 70 4	**P90**	24	27.3	8	200	165	130	—	M10x14.5	4	438.5	170
F 70 4	**P100**	28	31.3	8	250	215	180	—	M12x16	4.5	446.5	174
F 70 4	**P112**	28	31.3	8	250	215	180	—	M12x16	4.5	446.5	174
F 70 4	**P132**	38	41.3	10	300	265	230	16	14	5	482	176

F 70...HS

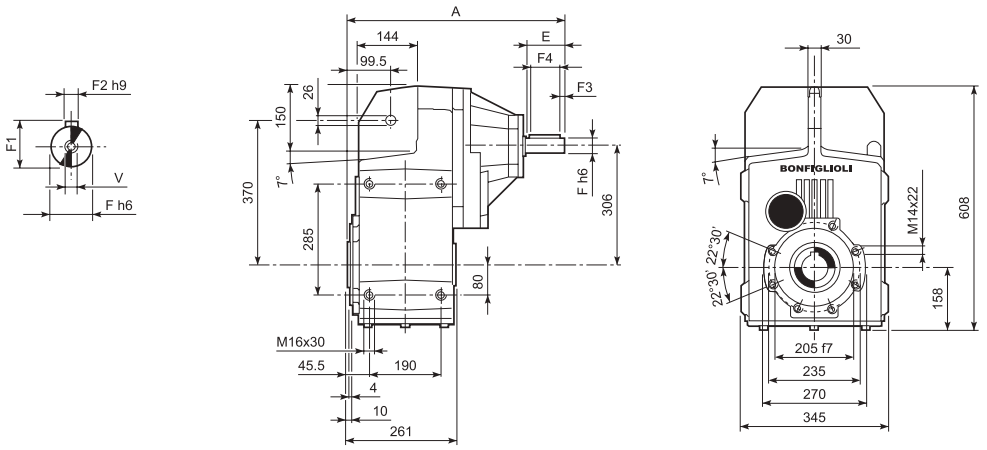

		A	E	F	F1	F2	F3	F4	V	
F 70 3	**HS**	572	110	42	45	12	10	90	M12x28	186
F 70 4		508.5	50	24	27	8	2.5	45	M8x19	174

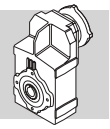

F 70

F 70...H

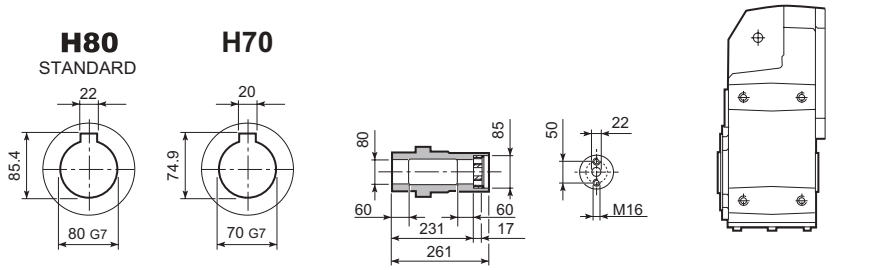

F 70...S

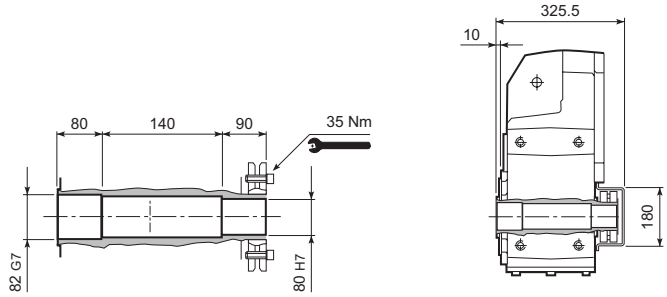

F 70...R

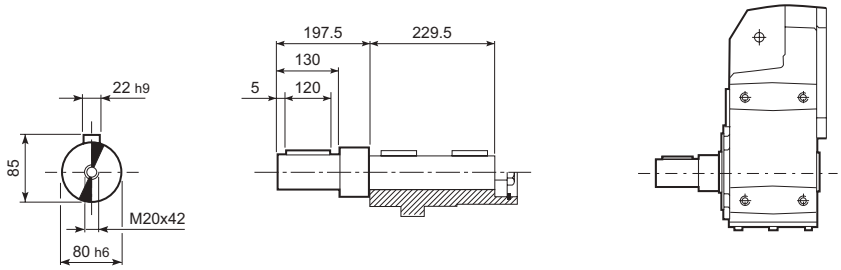

F 70...F...

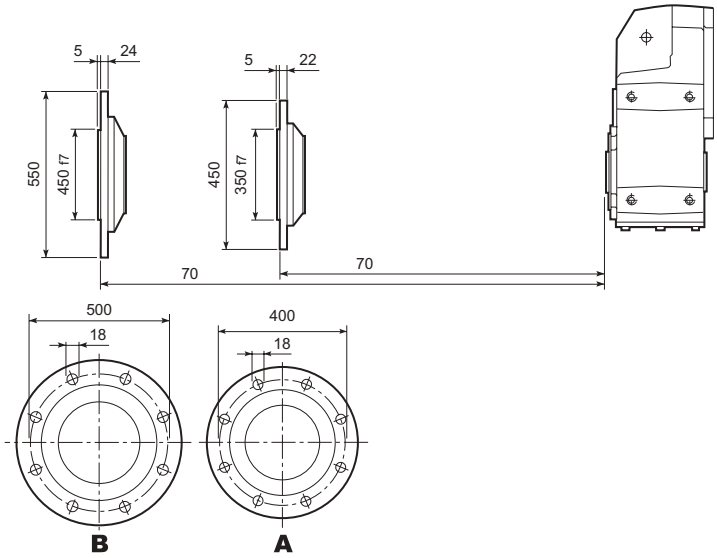

Bonfiglioli Riduttori

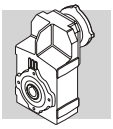

F 80...M

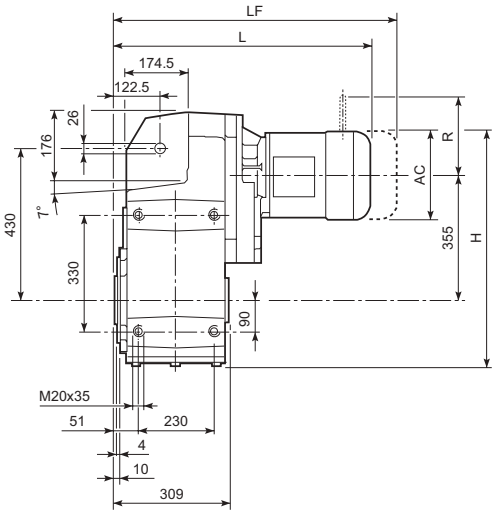

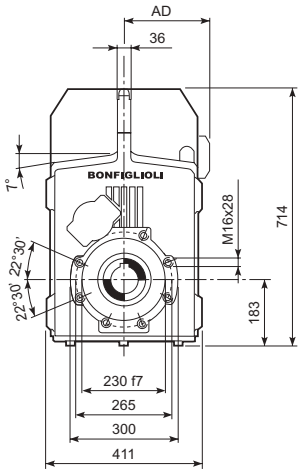

								M...FD M...FA		M...FD		M...FA	
			AC	H	L	AD		LF		R	AD	R	AD
F 80 3	**S3**	**M3S**	195	635.5	653	142	266	749	273	160	158	160	142
F 80 3	**S3**	**M3L**	195	635.5	685	142	273	776	280	160	158	160	142
F 80 3	**S4**	**M4**	258	667	793	193	307	902	325	226	210	217	193
F 80 3	**S4**	**M4LC**	258	667	828	193	315	927	333	226	210	217	193
F 80 3	**S5**	**M5S**	310	693	879.5	245	335	1019.5	365	266	245	247	245
F 80 3	**S5**	**M5L**	310	693	923.5	245	351	1063.5	381	266	245	247	245
F 80 4	**S1**	**M1**	138	607	644	108	262	705	265	103	135	124	108
F 80 4	**S2**	**M2S**	156	616	673	119	266	743	269	129	146	134	119
F 80 4	**S3**	**M3S**	195	635.5	716	142	271	812	278	160	158	160	142
F 80 4	**S3**	**M3L**	195	635.5	748	142	278	839	285	160	158	160	142
F 80 4	**S4**	**M4**	258	667	856	193	312	965	330	226	210	217	193
F 80 4	**S4**	**M4LC**	258	667	891	193	320	990	338	226	210	217	193

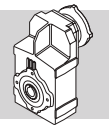

F 80...P(IEC)

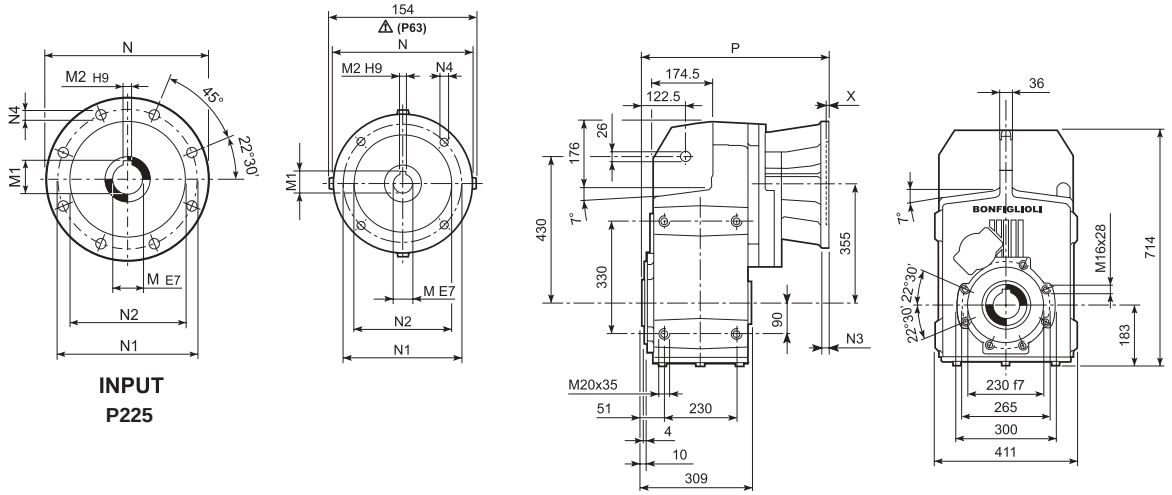

INPUT
P225

		M	M1	M2	N	N1	N2	N3	N4	X	P	
F 80 3	**P80**	19	21.8	6	200	165	130	—	M10x14.5	4	445.5	255
F 80 3	**P90**	24	27.3	8	200	165	130	—	M10x14.5	4	445.5	255
F 80 3	**P100**	28	31.3	8	250	215	180	—	M12x16	4.5	455.5	259
F 80 3	**P112**	28	31.3	8	250	215	180	—	M12x16	4.5	455.5	259
F 80 3	**P132**	38	41.3	10	300	265	230	16	14	5	492	261
F 80 3	**P160**	42	45.3	12	350	300	250	23	18	6	547.5	276
F 80 3	**P180**	48	51.8	14	350	300	250	23	18	6	547.5	276
F 80 3	**P200**	55	59.3	16	400	350	300	—	M16x25	7	572.5	298
F 80 3	**P225**	60	64.4	18	450	400	350	25	18	6	618	298
F 80 4	**P63**	11	12.8	4	140	115	95	—	M8x19	4	489	258
F 80 4	**P71**	14	16.3	5	160	130	110	—	M8x16	4.5	489	258
F 80 4	**P80**	19	21.8	6	200	165	130	—	M10x14.5	4	508.5	260
F 80 4	**P90**	24	27.3	8	200	165	130	—	M10x14.5	4	508.5	260
F 80 4	**P100**	28	31.3	8	250	215	180	—	M12x16	4.5	518.5	264
F 80 4	**P112**	28	31.3	8	250	215	180	—	M12x16	4.5	518.5	264
F 80 4	**P132**	38	41.3	10	300	265	230	16	14	5	552	266

F 80...HS

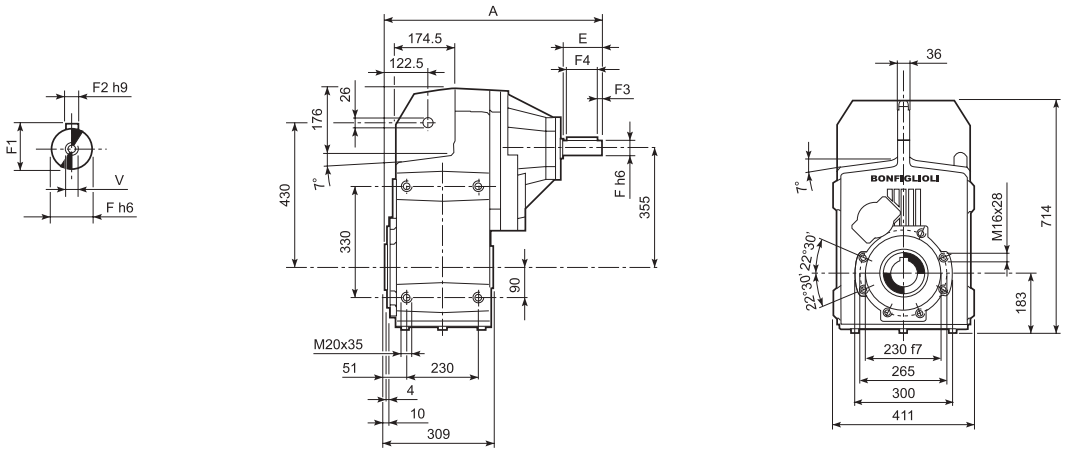

		A	E	F	F1	F2	F3	F4	V	
F 80 3	**HS**	630	110	42	45	12	10	90	M12x28	273
F 80 4		575.5	50	24	27	8	2.5	45	M8x19	263

F 80

F 80...H

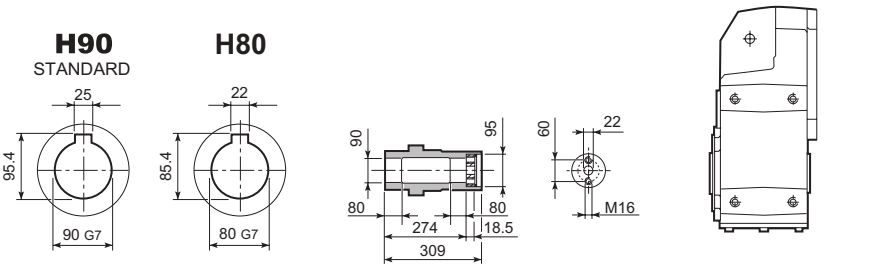

F 80...S

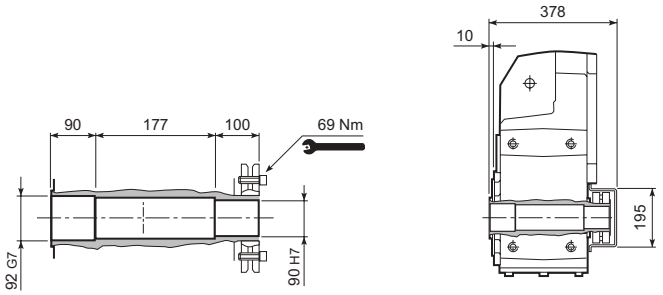

F 80...R

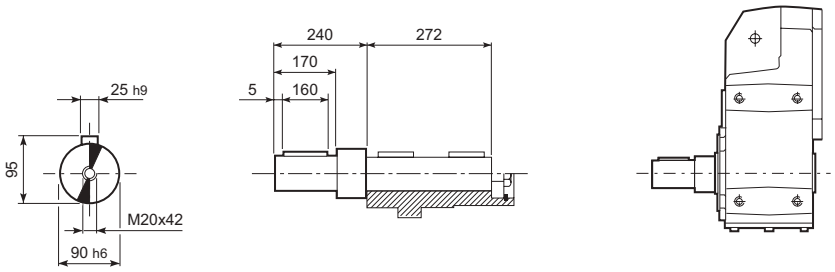

F 80...F...

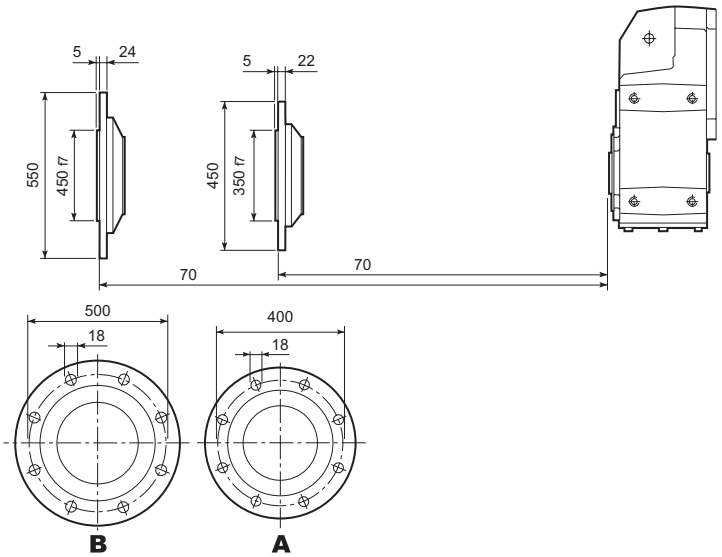

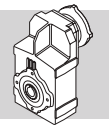

F 90...M

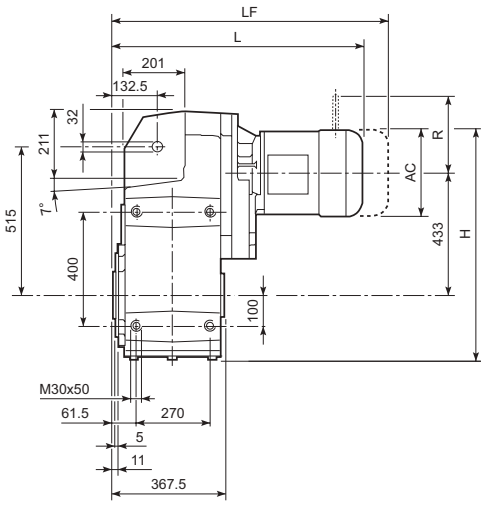

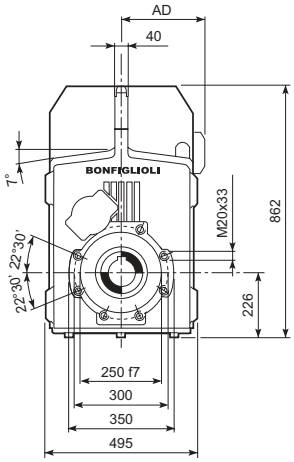

								M...FD M...FA		M...FD		M...FA	
			AC	H	L	AD		LF		R	AD	R	AD
F 90 3	**S3**	**M3S**	195	756	728	142	453	824	460	160	158	160	142
F 90 3	**S3**	**M3L**	195	756	760	142	460	851	467	160	158	160	142
F 90 3	**S4**	**M4**	258	787.5	868	193	494	977	512	226	210	217	193
F 90 3	**S5**	**M5L**	310	813.5	998.5	245	538	1138.5	568	266	245	247	245
F 90 4	**S2**	**M2S**	156	736.5	768	119	456	838	460	129	146	134	119
F 90 4	**S3**	**M3S**	195	756	811	142	460	907	468	160	158	160	142
F 90 4	**S3**	**M3L**	195	756	843	142	468	934	475	160	158	160	142
F 90 4	**S4**	**M4**	258	787.5	951	193	502	1060	520	226	210	217	193
F 90 4	**S4**	**M4LC**	258	787.5	986	193	510	1085	528	226	210	217	193

Bonfiglioli Riduttori

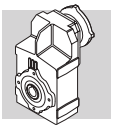

F 90...P(IEC)

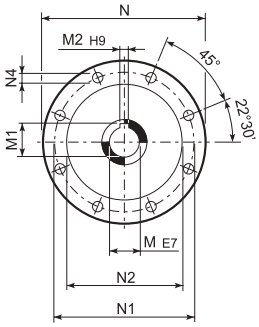

INPUT
P225...P250

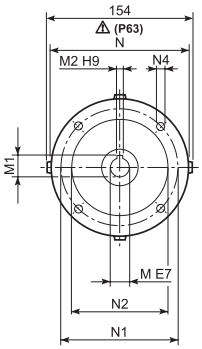

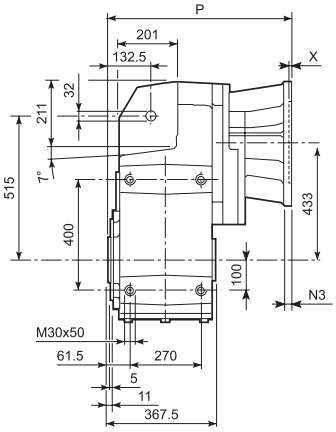

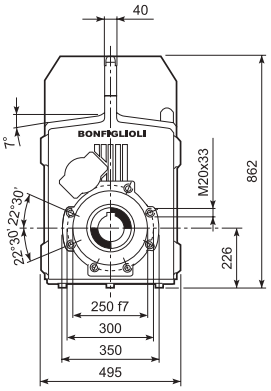

		M	M1	M2	N	N1	N2	N3	N4	X	P	
F 90 3	**P80**	19	21.8	6	200	165	130	—	M10x14.5	4	520.5	442
F 90 3	**P90**	24	27.3	8	200	165	130	—	M10x14.5	4	520.5	442
F 90 3	**P100**	28	31.3	8	250	215	180	—	M12x16	4.5	530.5	446
F 90 3	**P112**	28	31.3	8	250	215	180	—	M12x16	4.5	530.5	446
F 90 3	**P132**	38	41.3	10	300	265	230	16	14	5	567	449
F 90 3	**P160**	42	45.3	12	350	300	250	23	18	6	622.5	463
F 90 3	**P180**	48	51.8	14	350	300	250	23	18	6	622.5	463
F 90 3	**P200**	55	59.3	16	400	350	300	—	M16x25	7	647.5	485
F 90 3	**P225**	60	64.4	18	450	400	350	30	18	6	693	485
F 90 3	**P250**	65	69.4	18	550	500	450	30	18	6	723	507
F 90 4	**P63**	11	12.8	4	140	115	95	—	M8x19	4	584	448
F 90 4	**P71**	14	16.3	5	160	130	110	—	M8x16	4.5	584	448
F 90 4	**P80**	19	21.8	6	200	165	130	—	M10x14.5	4	603.5	450
F 90 4	**P90**	24	27.3	8	200	165	130	—	M10x14.5	4	603.5	450
F 90 4	**P100**	28	31.3	8	250	215	180	—	M12x16	4.5	613.5	454
F 90 4	**P112**	28	31.3	8	250	215	180	—	M12x16	4.5	613.5	454
F 90 4	**P132**	38	41.3	10	300	265	230	16	14	5	650	455
F 90 4	**P160**	42	45.3	12	350	300	250	23	18	5.5	700.5	461
F 90 4	**P180**	48	51.8	14	350	300	250	23	18	5.5	700.5	461

F 90...HS

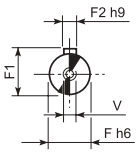

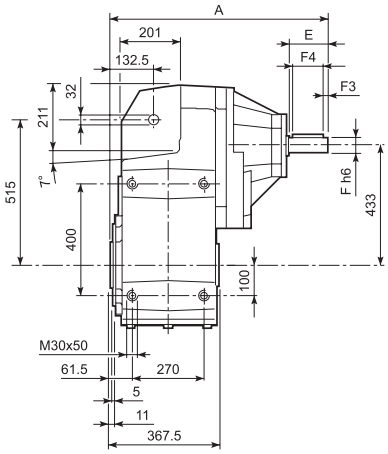

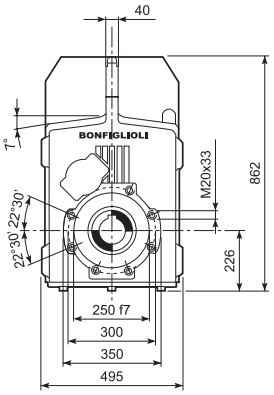

		A	E	F	F1	F2	F3	F4	V	
F 90 3	**HS**	806.5	140	60	64	18	10	120	M16x36	485
F 90 4		673.5	50	24	27	8	2.5	45	M8x19	452

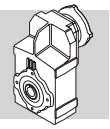

F 90

F 90...H

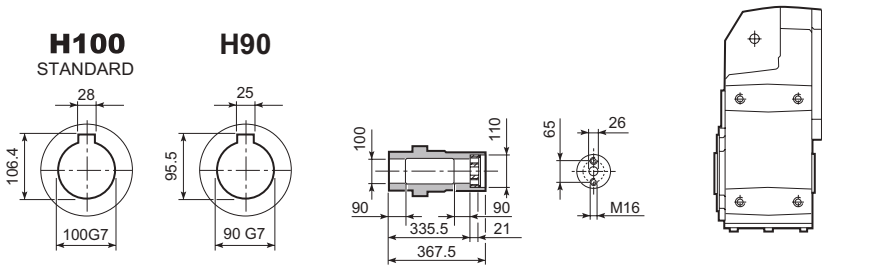

F 90...S

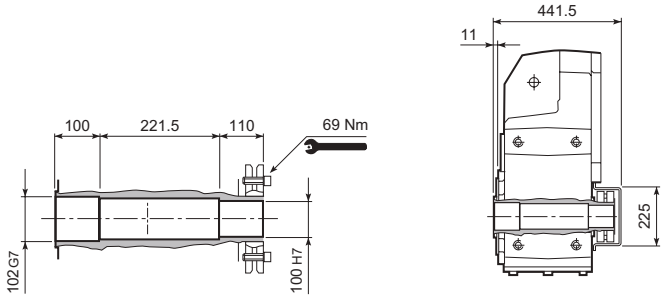

F 90...R

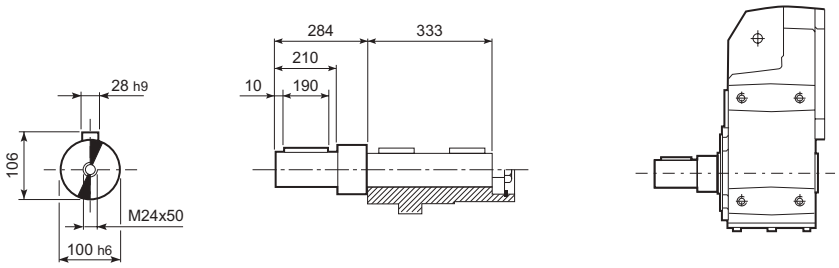

F 90...F...

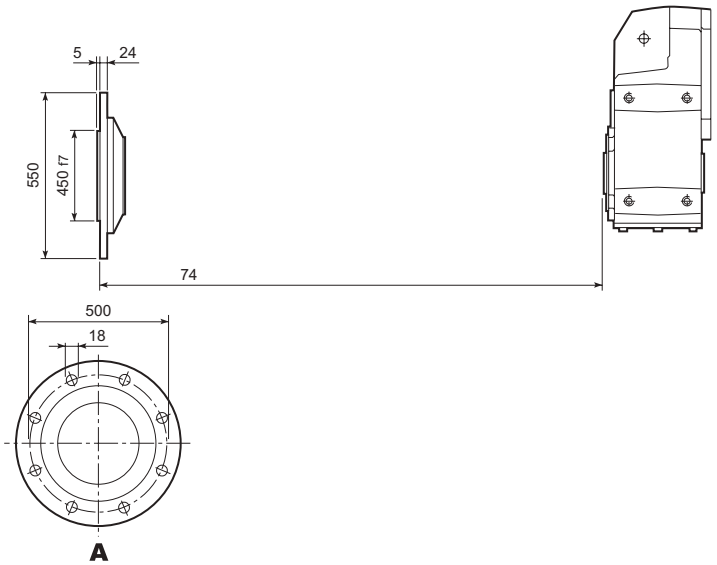

65 ACCESSORIES

Anti-vibration kit

The gearboxes of the F series are supplied with an anti-vibration kit at customer request.
The kit includes all components required for shaft mounting (torque arm is out of scope). Dimensions are shown in the following table.

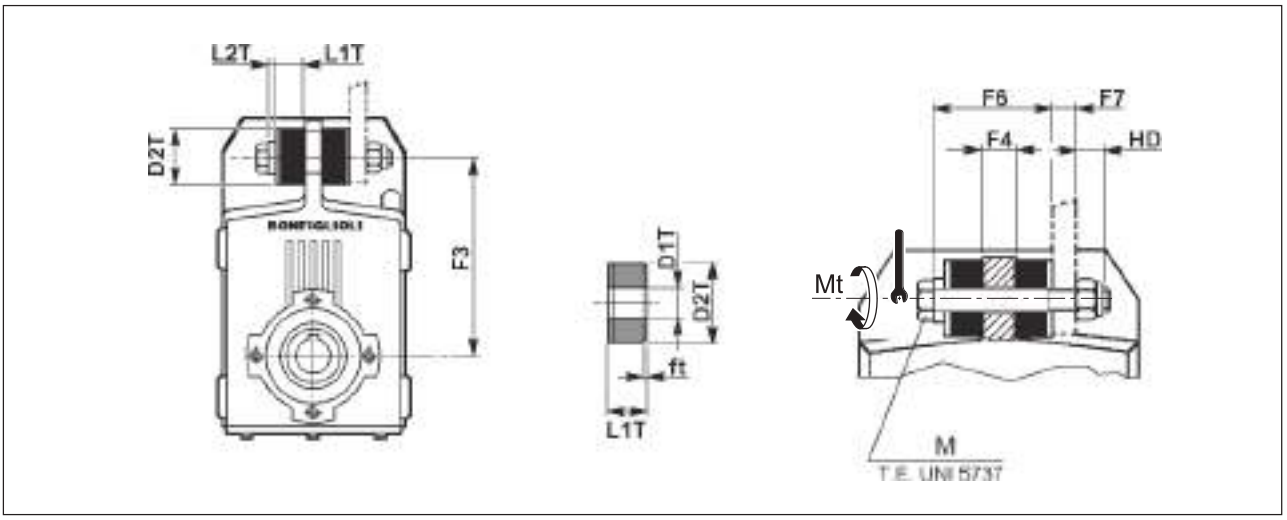

	F3	F4	F6	F7 (max.)	HD	L1T	L2T	D1T	D2T	M	Mt [Nm]	ft
F 10	140	20	55	10	12.3	15	5	11	30	M10x80	10	1.5
F 20	160	20	55	10	12.3	15	5	11	30	M10x80	10	1.5
F 25	162	20	65	20	14.8	20	5	12.5	40	M12x100	20	1.5
F 31	170	20	65	20	14.8	20	5	12.5	40	M12x100	20	1.5
F 41	218	16	61	24	14.8	20	5	12.5	40	M12x100	20	2.3
F 51	278	20	90	47	23	30	10	21	60	M20x160	50	3.0
F 60	325	26	96	41	23	30	10	21	60	M20x160	50	4.0
F 70	370	30	122	50	28	40	12	25	80	M24x200	100	4.0
F 80	430	36	128	44	28	40	12	25	80	M24x200	100	6.0
F 90	515	40	175	40	33.2	60	15	32	100	M30x260	200	9.0

f_t = shortening of the rubber buffer under rated torque transmission.

66 CUSTOMER' SHAFT

Make the driven shaft to be coupled to the gear unit's output shaft from a good quality steel, respecting the dimensions given in the table.

A device such as that illustrated below should also be installed to secure the shaft axially. Take care to verify and dimension the various components to suit the needs of the application.

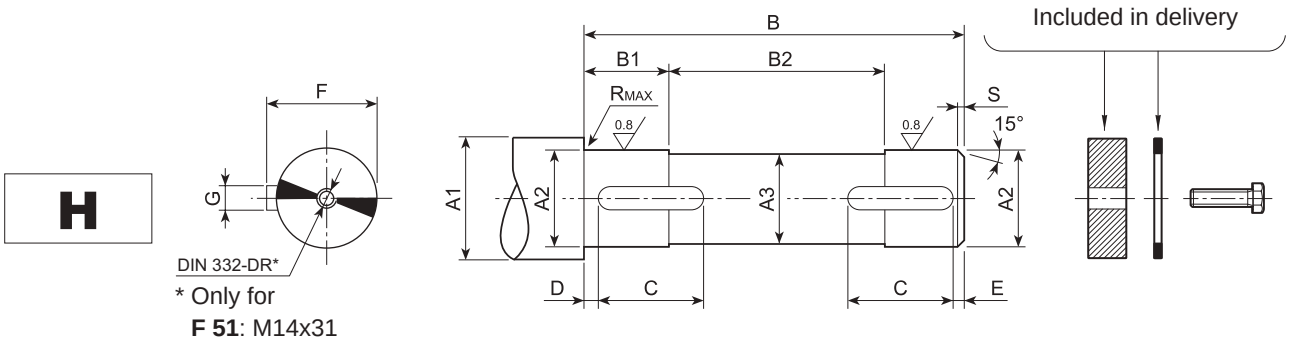

	A1	A2	A3	B	B1	B2	C	D	E	F	G	R	S	UNI 6604	UNI 5739
F 10	≥ 35	30 h7	29	87.5	15.5	56.5	20	2	2	33	8 h9	0.5	1.5	8x7x20 A	M8x25
	≥ 30	25 h7	24	87.5	15.5	56.5	20	2	2	28	8 h9	0.5	1.5	8x7x20 A	
F 20	≥ 42	35 h7	34	99	18	63	22	2	2	38	10 h9	0.5	1.5	10x8x22 A	M8x30
	≥ 35	30 h7	29	99	18	63	22	2	2	33	8 h9	0.5	1.5	8x7x22 A	
F 25	≥ 47	40 h7	39	104	23	58	30	2	2	43	12 h9	0.5	1.5	12x8x30 A	M8x30
	≥ 42	35 h7	34	104	23	58	30	2	2	38	10 h9	0.5	1.5	10x8x30 A	
F 31	≥ 47	40 h7	39	104	28	48	30	2	2	43	12 h9	0.5	1.5	12x8x30 A	M8x30
	≥ 42	35 h7	34	104	28	48	30	2	2	38	10 h9	0.5	1.5	10x8x30 A	
F 41	≥ 52	45 h7	44	118	27.5	63	45	2.5	2.5	48.5	14 h9	1	2.0	14x9x45 A	M10x30
	≥ 47	40 h7	39	118	27.5	63	45	2.5	2.5	43	12 h9	1	2.0	12x8x45 A	
F 51	≥ 63	55 h7	54	139	33	73	50	2.5	2.5	59	16 h9	1	2.0	16x10x50 A	M14x45
	≥ 57	50 h7	49	139	33	73	50	2.5	2.5	53.5	14 h9	1	2.0	14x9x50 A	
F 60	≥ 78	70 h7	69	180	38	104	70	2.5	2.5	74.5	20 h9	1	2.0	20x12x70 A	M16x45
	≥ 68	60 h7	59	180	38	104	70	2.5	2.5	64	18 h9	1	2.0	18x11x70 A	
F 70	≥ 89	80 h7	79	229	58	113	75	3	3	85	22 h9	2.5	2.5	22x14x75 A	M20x55
	≥ 78	70 h7	69	229	58	113	75	3	3	74.5	20 h9	2.5	2.5	20x12x75 A	
F 80	≥ 99	90 h7	89	272	78	116	100	3	3	95	25 h9	2.5	2.5	25x14x100 A	M20x55
	v 89	80 h7	79	272	78	116	100	3	3	85	22 h9	2.5	2.5	22x14x100 A	
F 90	≥ 111	100 h7	99	333	87.5	158	110	3	3	106	28 h9	2.5	2.5	28x16x110 A	M24x65
	≥ 99	90 h7	89	333	87.5	158	110	3	3	95	25 h9	2.5	2.5	25x14x110 A	

Bonfiglioli Riduttori

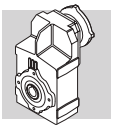

S

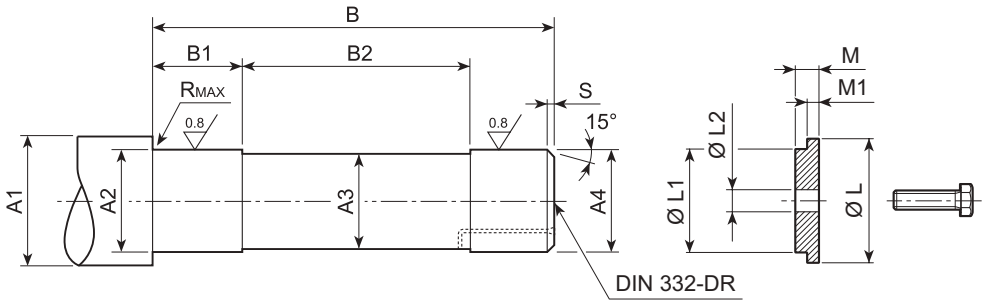

	A1	A2	A3	A4	B	B1	B2	R	S	L	L1	L2	M	M1	UNI 5739
F 10	≥ 36	27 h7	24	25 h6	138	34	70	0.5	1.5	29.5	25 d9	9	7	5.5	M8x25
F 20	≥ 42	32 h7	29	30 h6	160	38	84	0.5	1.5	35.5	30 d9	9	7	5.5	M8x25
F 25	≥ 42	32 h7	30	31 h6	172	38	96	0.5	1.5	35.5	31 d9	9	7	5.5	M8x25
F 31	≥ 50	38 h7	35	36 h6	155	40	73	1	2	43	36 d9	9	7	5.5	M8x25
F 41	≥ 58	44 h7	41	42 h6	177	46.5	82	1	2	49	42 d9	11	8.5	7	M10x30
F 51	≥ 68	54 h7	51	52 g6	201	48	91	1	2	61	52 d9	18	9	7.5	M16x45
F 60	≥ 84	67 h7	64	65 g6	248	53	133	1.5	2	80	65 d9	18	9	7.5	M16x45
F 70	≥ 104	82 h7	79	80 g6	308	78	140	2.5	2.5	95	80 d9	22	13.5	12	M20x55
F 80	≥ 114	92 h7	89	90 g6	365	88	177	2.5	2.5	105	90 d9	22	13.5	12	M20x55
F 90	≥ 126	102 h7	99	100 g6	429.5	98	221.5	2.5	2.5	120	100 d9	26	20	18.5	M24x70

QF

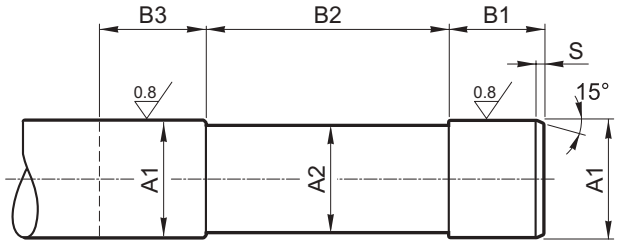

		A1	A2	B1	B2	B3	S
F 10	**QF25**	25 h6	24	41	83	≥ 50	1.5
	QF30	30 h6	29				
F 20	**QF25**	25 h6	24	41	104.5	≥ 50	1.5
	QF30	30 h6	29				
F 25	**QF30**	30 h6	29	41	120.5	≥ 50	1.5
	QF32	32 h6	31				
F 31	**QF35**	35 h6	34	45	95.5	≥ 54	1.5
	QF40	40 h6	39				
F 41	**QF42**	42 h6	41	46	112.5	≥ 55	2
	QF45	45 h6	44				
F 51	**QF50**	50 h6	49	48	131	≥ 57	2
	QF55	55 h6	54				
F 60	**QF60**	60 h6	59	57	158	≥ 66	2.5
	QF65	65 h6	64				
	QF70	70 h6	69				

67 DESIGN FEATURES

The main design characteristics are:
- modularity
- space effective
- high efficiency
- quite operation
- gears in hardened and case-hardened steel
- bare aluminium housing for sizes 10, 20, 30, unpainted
  high strength painted cast-iron housings for larger frame sizes
- input and output shafts from high grade steel.

(E 60)

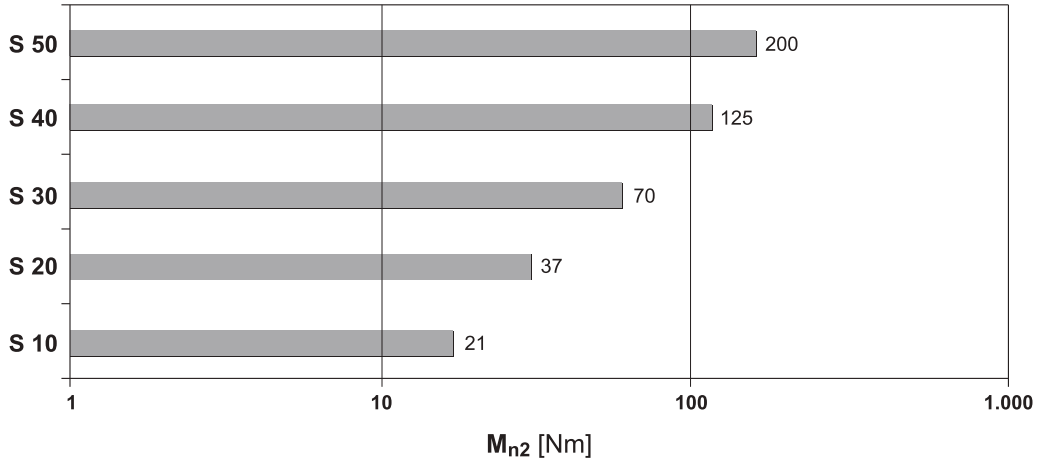

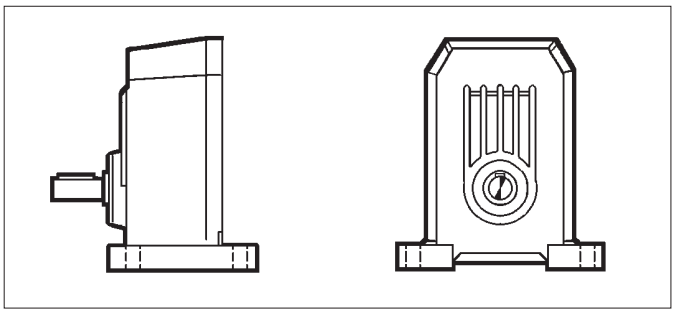

P

Foot mount

S 10 ... S 50

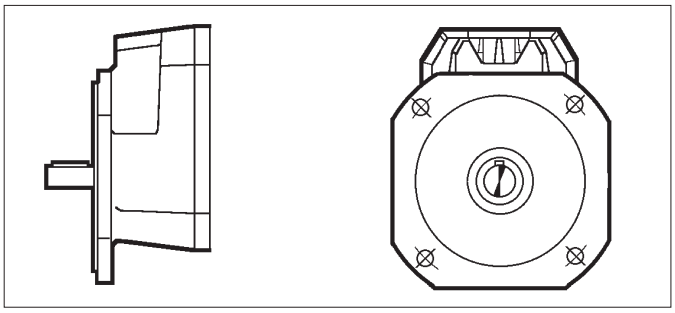

F

Flange mount

S 10 ... S 50

69 DESIGNATION

GEAR UNIT

S 10 1 P 1.4 S1 B3 .....

OPTIONS

MOUNTING POSITION

S...P: **B3** (Standard), **B6**, **B7**, **B8**, **V5**, **V6**
S...F: **B5** (Standard), **B51**, **B52**, **B53**, **V1**, **V3**

INPUT CONFIGURATION

S05	**S3**
S1	**S4**
S2	**S5**

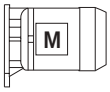

IEC_

P63	**P112**
P71	**P132**
P80	**P160**
P90	**P180**
P100	

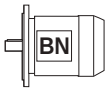

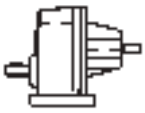

HS

GEAR RATIO

VERSION

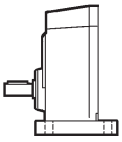

P

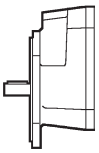

F

REDUCTIONS
1

GEAR FRAME SIZE
10, **20**, **30**, **40**, **50**

TYPE: **S** = single stage gear unit

MOTOR | BRAKE

M 1LA 4 230/400-50 IP54 CLF ..... **W FD** 7.5 R SB 220 SA .....

OPTIONS

BRAKE SUPPLY

RECTIFIER TYPE
AC/DC
NB, **SB**, **NBR**, **SBR**

BRAKE HAND RELEASE
R, **RM**

BRAKE TORQUE

BRAKE TYPE
FD (d.c. brake)
FA (a.c. brake)

TERMINAL BOX POSITION
W (default), **N**, **E**, **S**

MOTOR MOUNTING
— (compact motor)
B5 (IEC - motor)

INSULATION CLASS
CL F standard
CL H option

DEGREE OF PROTECTION
IP55 standard (IP54 - brake motor)

VOLTAGE - FREQUENCY

POLE NUMBER
2, **4**, **6**, **2/4**, **2/6**, **2/8**, **2/12**, **4/6**, **4/8**

MOTOR SIZE
0B ... 5LA (compact motor)
63A ... 280M (IEC motor)

MOTOR TYPE
M = compact 3-phase
BN = IEC 3-phase

69.1 Gearbox options

SO

Gear units S10, S20, S30, S40, usually factory filled with oil, to be supplied unlubricated.

LO

Gearbox S50, usually supplied without oil, to be supplied with synthetic oil currently used by BONFIGLIOLI RIDUTTORI and filled according to requested mounting position.

DV

Dual oil seals on input shaft. (Available only for compact gearmotors).

VV

Fluoro elastomer oil seal on input shaft.

PV

All oil seals in Fluoro elastomer.

SURFACE PROTECTION

When no specific protection class is requested, the painted (ferrous) surfaces of gearboxes are protected to at least corrosivity class C2 (UNI EN ISO 12944-2). For improved resistance to atmospheric corrosion, gearboxes can be delivered with **C3** and **C4** surface protection, obtained by painting the complete gearbox.

(E 61)

SURFACE PROTECTION	Typical environments	Maximum surface temperature	Corrosivity class according to UNI EN ISO 12944-2
C3	Urban and industrial environments with up to 100% relative humidity (medium air pollution)	120°C	C3
C4	Industrial areas, coastal areas, chemical plant, with up to 100% relative humidity (high air pollution)	120°C	C4

Gearboxes with optional protection to class **C3** or **C4** are available in a choice of colours.
If no specific colour is requested (see the “PAINTING” option) gearboxes are finished in RAL 7042.
Gearboxes can also be supplied with surface protection for corrosivity class **C5** according to UNI EN ISO 12944-2. Contact our Technical Service for further details.

PAINTING

Gearboxes with optional protection to class C3 or C4 are available in the colours listed in the following table.

(E 62)

PAINTING	Colour	RAL number
RAL7042*	Traffic Grey A	7042
RAL5010	Gentian Blue	5010
RAL9005	Jet Black	9005
RAL9006	White Aluminium	9006
RAL9010	Pure White	9010

* Gearboxes are supplied in this standard colour if no other colour is specified.

NOTE – “PAINTING” options can only be specified in conjunction with “SURFACE PROTECTION” options.

CERTIFICATES

AC - Certificate of compliance
The document certifies the compliance of the product with the purchase order and the construction in conformity with the applicable procedures of the Bonfiglioli Quality System.

CC - Inspection certificate
The document entails checking on order compliance, the visual inspection of external conditions and of mating dimensions. Checking on main functional parameters in unloaded conditions is also performed along with oil seal proofing, both in static and in running conditions. Units inspected are sampled within the shipping batch and marked individually.

69.2 Motor options

AL, AR
A backstop device on the motor itself, as described in the electric motors section of this catalogue, is available for gearmotors with integral M Series motors. The following table shows the direction of free rotation of the gearbox, on the basis of which the correct option must be selected.

(E 64)

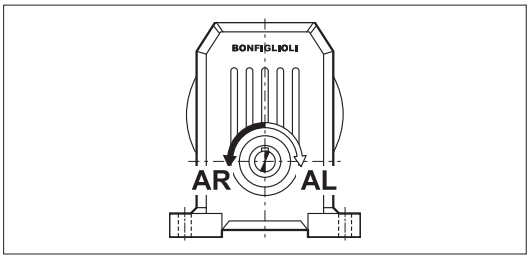

For further information on options, consult the electric motors section.

70 MOUNTING POSITION AND TERMINAL BOX ANGULAR LOCATION

Location of motor terminal box can be specified by viewing the motor from the fan side; standard location is shown in black (W).

Angular position of the brake release lever.
Unless otherwise specified, brake motors have the manual device side located, 90° apart from terminal box.
Different angles can be specified through the relevant options available.

(E 63)

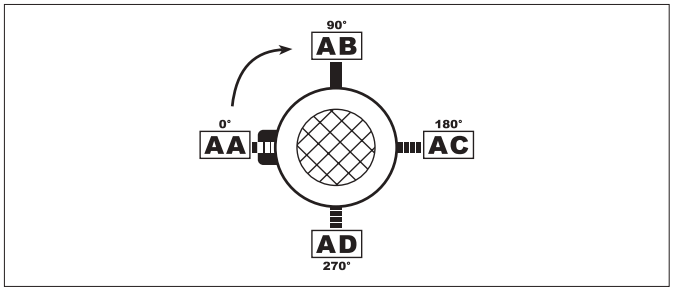

S ... P

B3

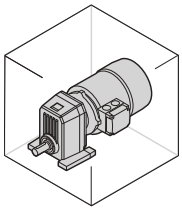
_S

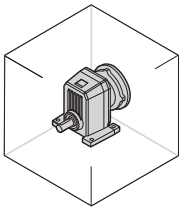
_P(IEC)

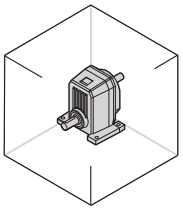
_HS

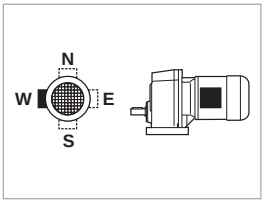

B6

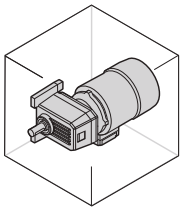
_S

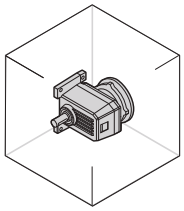
_P(IEC)

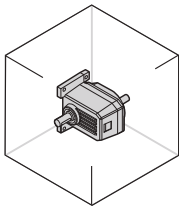
_HS

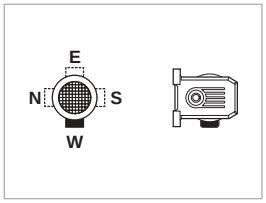

B7

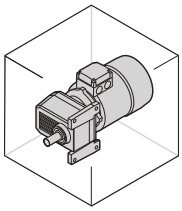
_S

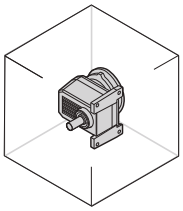
_P(IEC)

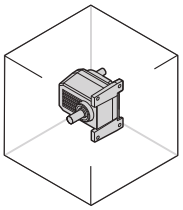
_HS

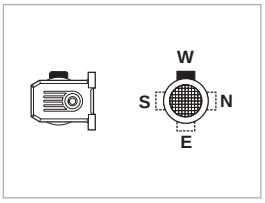

B8

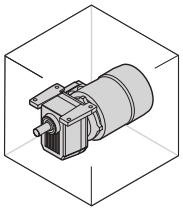
_S

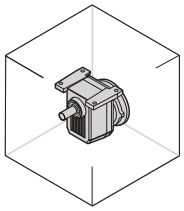
_P(IEC)

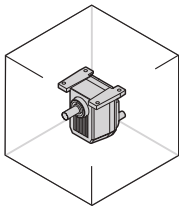
_HS

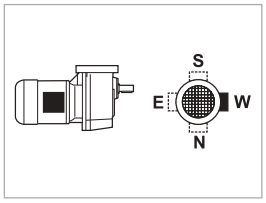

V5

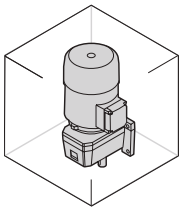
_S

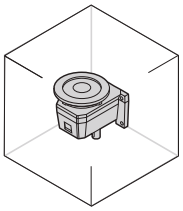
_P(IEC)

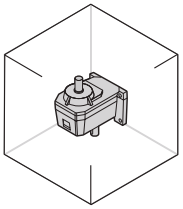
_HS

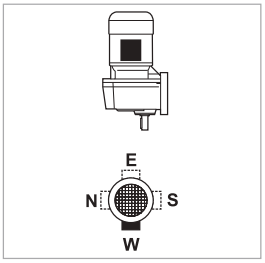

V6

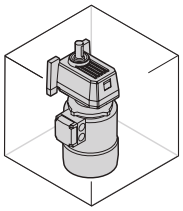
_S

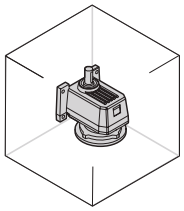
_P(IEC)

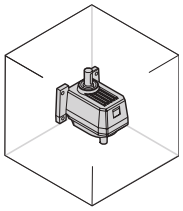
_HS

W = Default

S ... F

B5

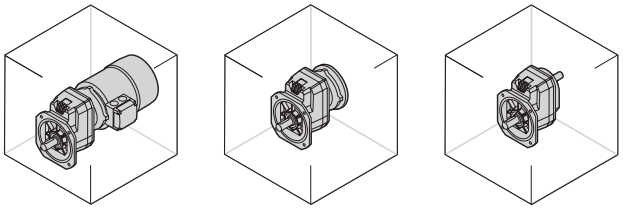

_S _P(IEC) _HS

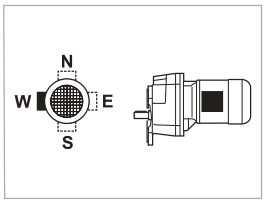

B51

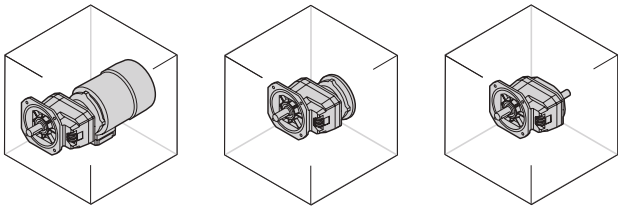

_S _P(IEC) _HS

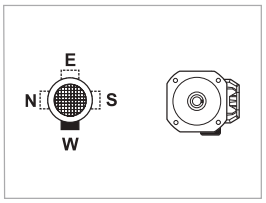

B53

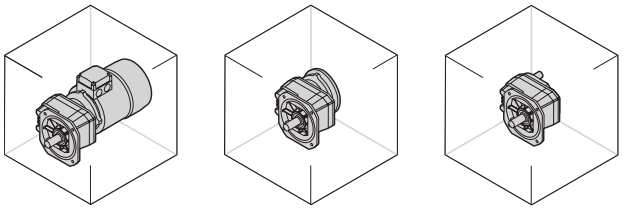

_S _P(IEC) _HS

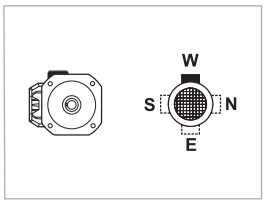

B52

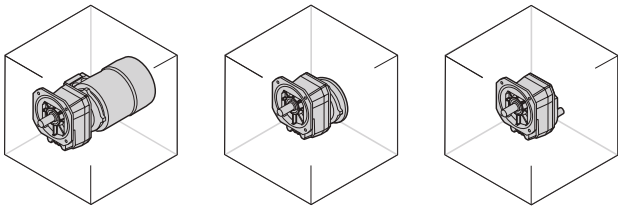

_S _P(IEC) _HS

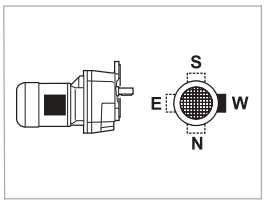

V1

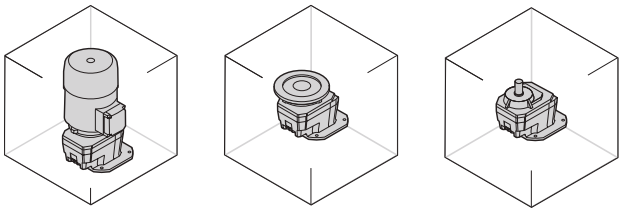

_S _P(IEC) _HS

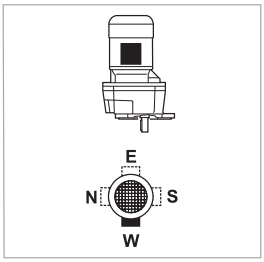

V3

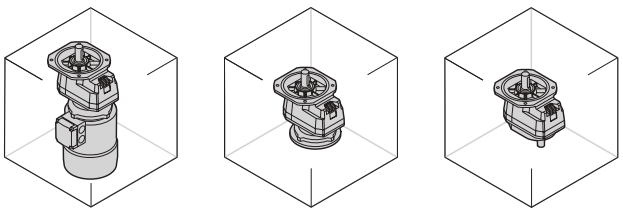

_S _P(IEC) _HS

W = Default

71 OVERHUNG LOADS

External transmissions keyed onto input and/or output shaft generate loads that act radially onto same shaft.
Resulting shaft loading must be compatible with both the bearing and the shaft capacity. Namely shaft loading (R_{c1} for input shaft, R_{c2} for output shaft), must be equal or lower than admissible overhung load capacity for shaft under study (R_{n1} for input shaft, R_{n2} for output shaft). OHL capability listed in the rating chart section.
In the formulas given below, index (1) applies to parameters relating to input shaft, whereas index (2) refers to output shaft.
The load generated by an external transmission can be calculated with close approximation by the following equations:

$$R_{c1}[N] = \frac{2000 \cdot M_1[Nm] \cdot K_r}{d\,[mm]} \quad ; \quad R_{c2}[N] = \frac{2000 \cdot M_2[Nm] \cdot K_r}{d\,[mm]} \qquad (44)$$

(E 65)

M_1 [Nm]	Torque applied to input shaft
M_2 [Nm]	Torque drawn at output shaft
d [mm]	Pitch diameter of element keyed onto shaft
K_r = 1	Chain transmission

K_r = 1,25	Gear transmission
K_r = 1,5	V-belt transmission
K_r = 2,0	Flat belt transmission

Verification of OHL capability varies depending on whether load applies at midpoint of shaft or it is shifted further out:

(E 66)

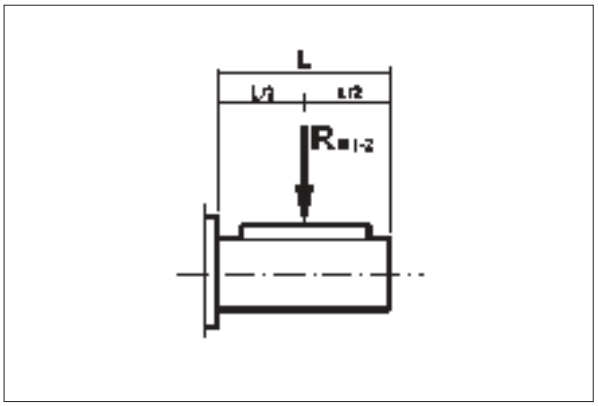

(E 67)

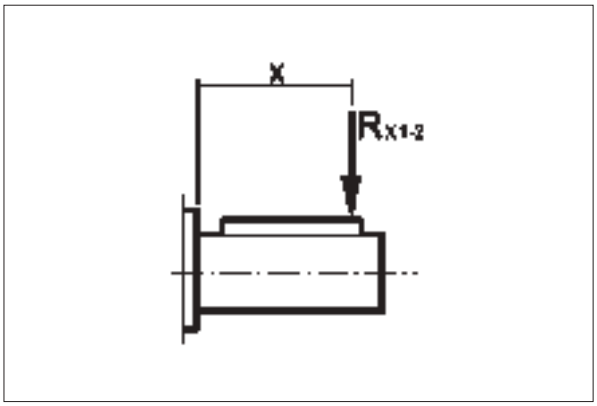

a) Load applied at midpoint of shaft, tab. (E66)

A comparison of shaft loading with catalogue OHL ratings should verify the following condition:

Rc1 ≤ Rn1 [input shaft]

or

Rc2 ≤ Rn2 [output shaft]

b) Load off the midpoint tab. (E67)

When load is shifted at an “x” distance from shaft shoulder, permissible load must be calculated for that distance.
Revised permissible overhung loads Rx1 (input) and Rx2 (output) are calculated respectively from original rated values Rn1 and Rn2 through factor:

$$\frac{a}{b+x} \qquad (45)$$

(E 68)

	Load location factors					
	Output shaft			Input shaft		
	a	**b**	**c**	**a**	**b**	**c**
S 10 1	61	46	200	21	1	300
S 20 1	73.5	53.5	270	40	20	350
S 30 1	91.5	66.5	380	38.5	18.5	350
S 40 1	126.5	96.5	600	49.5	24.5	450
S 50 1	153.5	113.5	680	49.5	24.5	450

Verification procedure is described here after.

INPUT SHAFT

1. Calculate:

$$R_{x1} = R_{n1} \cdot \frac{a}{b+x} \qquad (46)$$

N.B. Subject to condition:

$$\frac{L}{2} \leq x \leq c \qquad (47)$$

Finally, the following condition must be verified:

$$R_{c1} \leq R_{x1} \tag{48}$$

OUTPUT SHAFT

1. Calculate:

$$R_{x2} = R_{n2} \cdot \frac{a}{b + x} \tag{49}$$

N.B. Subject to condition:

$$\frac{L}{2} \leq x \leq c \tag{50}$$

Finally, the following condition must be verified:

$$R_{c2} \leq R_{x2} \tag{51}$$

72 THRUST LOADS, A_{n1}, A_{n2}

Permissible thrust loads on input [A_{n1}] and output [A_{n2}] shafts are obtained from the radial loading for the shaft under consideration [R_{n1}] and [R_{n2}] through the following equation:

$$\begin{aligned} A_{n1} &= R_{n1} \cdot 0.2 \\ A_{n2} &= R_{n2} \cdot 0.2 \end{aligned} \tag{52}$$

The thrust loads calculated through these formulas apply to thrust forces occurring at the same time as rated radial loads.
In the only case that no overhung load acts on the shaft the value of the admissible thrust load [A_n] amounts to 50% of rated OHL [R_n] on same shaft.
Where thrust loads exceed permissible value or largely prevail over radial loads, contact Bonfiglioli Riduttori for an in-depth analysis of the application.

0.09 kW

n_2 min^{-1}	M_2 Nm	S	i	R_{n2} N			IEC	
69	12.1	2.9	13.1	2400			**S301_13.1 P63 BN63A6**	507
73	11.5	1.7	12.4	1500	**S201_12.4 S05 M05A6**	504	**S201_12.4 P63 BN63A6**	505
74	11.4	1.1	12.3	1160	**S101_12.3 S05 M05A6**	502	**S101_12.3 P63 BN63A6**	503
85	10.0	2.0	10.8	1500	**S201_10.8 S05 M05A6**	504	**S201_10.8 P63 BN63A6**	505
88	9.5	1.3	10.3	1100	**S101_10.3 S05 M05A6**	502	**S101_10.3 P63 BN63A6**	503
103	8.2	1.5	8.9	1060	**S101_8.9 S05 M05A6**	502	**S101_8.9 P63 BN63A6**	503
107	7.9	2.5	8.5	1500	**S201_8.5 S05 M05A6**	504	**S201_8.5 P63 BN63A6**	505
132	6.4	2.7	6.9	990	**S101_6.9 S05 M05A6**	502	**S101_6.9 P63 BN63A6**	503
149	5.7	3.0	6.1	960	**S101_6.1 S05 M05A6**	502	**S101_6.1 P63 BN63A6**	503
193	4.4	3.2	4.7	890	**S101_4.7 S05 M05A6**	502	**S101_4.7 P63 BN63A6**	503
237	3.6	3.9	3.8	830	**S101_3.8 S05 M05A6**	502	**S101_3.8 P63 BN63A6**	503
284	3.0	4.7	3.2	790	**S101_3.2 S05 M05A6**	502	**S101_3.2 P63 BN63A6**	503
364	2.3	5.2	2.5	730	**S101_2.5 S05 M05A6**	502	**S101_2.5 P63 BN63A6**	503
485	1.7	6.9	1.9	670	**S101_1.9 S05 M05A6**	502	**S101_1.9 P63 BN63A6**	503
640	1.3	9.1	1.4	610	**S101_1.4 S05 M05A6**	502	**S101_1.4 P63 BN63A6**	503

0.12 kW

n_2 min^{-1}	M_2 Nm	S	i	R_{n2} N			IEC	
69	16.2	2.2	13.1	2400			**S301_13.1 P63 BN63A4**	507
73	15.3	1.3	12.4	1500	**S201_12.4 S05 M05B6**	504	**S201_12.4 P63 BN63B6**	505
85	13.3	1.5	10.8	1500	**S201_10.8 S05 M05B6**	504	**S201_10.8 P63 BN63B6**	505
88	12.7	2.8	10.3	2400			**S301_10.3 P63 BN63B6**	507
88	12.7	0.9	10.3	1060	**S101_10.3 S05 M05B6**	502	**S101_10.3 P63 BN63B6**	503
102	11.0	3.2	8.9	2400			**S301_8.9 P63 BN63B6**	507
103	11.0	1.1	8.9	1030	**S101_8.9 S05 M05B6**	502	**S101_8.9 P63 BN63B6**	503
107	10.5	2.8	13.1	2400			**S301_13.1 P63 BN63B6**	507
107	10.5	1.9	8.5	1500	**S201_8.5 S05 M05B6**	504	**S201_8.5 P63 BN63B6**	505
113	10.0	1.7	12.4	1500	**S201_12.4 S05 M05A4**	504	**S201_12.4 P63 BN63A4**	505
114	9.9	1.0	12.3	1000	**S101_12.3 S05 M05A4**	502	**S101_12.3 P63 BN63A4**	503
126	8.9	3.4	7.2	1500	**S201_7.2 S05 M05B6**	504	**S201_7.2 P63 BN63B6**	505
130	8.6	2.0	10.8	1500	**S201_10.8 S05 M05A4**	504	**S201_10.8 P63 BN63A4**	505
132	8.5	2.0	6.9	960	**S101_6.9 S05 M05B6**	502	**S101_6.9 P63 BN63B6**	503
136	8.3	1.2	10.3	960	**S101_10.3 S05 M05A4**	502	**S101_10.3 P63 BN63A4**	503
149	7.5	2.3	6.1	940	**S101_6.1 S05 M05B6**	502	**S101_6.1 P63 BN63B6**	503
158	7.1	1.4	8.9	920	**S101_8.9 S05 M05A4**	502	**S101_8.9 P63 BN63A4**	503
165	6.8	2.5	8.5	1500	**S201_8.5 S05 M05A4**	504	**S201_8.5 P63 BN63A4**	505
193	5.8	2.4	4.7	870	**S101_4.7 S05 M05B6**	502	**S101_4.7 P63 BN63B6**	503
203	5.5	2.7	6.9	860	**S101_6.9 S05 M05A4**	502	**S101_6.9 P63 BN63A4**	503
229	4.9	3.1	6.1	830	**S101_6.1 S05 M05A4**	502	**S101_6.1 P63 BN63A4**	503
237	4.7	2.9	3.8	820	**S101_3.8 S05 M05B6**	502	**S101_3.8 P63 BN63B6**	503
284	3.9	3.5	3.2	780	**S101_3.2 S05 M05B6**	502	**S101_3.2 P63 BN63B6**	503
296	3.8	3.2	4.7	770	**S101_4.7 S05 M05A4**	502	**S101_4.7 P63 BN63A4**	503
364	3.1	3.9	3.8	720	**S101_3.8 S05 M05A4**	502	**S101_3.8 P63 BN63A4**	503
364	3.1	3.9	2.5	720	**S101_2.5 S05 M05B6**	502	**S101_2.5 P63 BN63B6**	503
438	2.6	4.7	3.2	680	**S101_3.2 S05 M05A4**	502	**S101_3.2 P63 BN63A4**	503

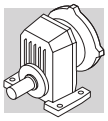

0.12 kW

n_2 min-1	M_2 Nm	S	i	R_{n2} N			IEC	
485	2.3	5.2	1.9	660	**S101_1.9 S05 M05B6**	502	**S101_1.9 P63 BN63B6**	503
560	2.0	5.0	2.5	630	**S101_2.5 S05 M05A4**	502	**S101_2.5 P63 BN63A4**	503
640	1.8	6.8	1.4	600	**S101_1.4 S05 M05B6**	502	**S101_1.4 P63 BN63B6**	503
747	1.5	6.6	1.9	580	**S101_1.9 S05 M05A4**	502	**S101_1.9 P63 BN63A4**	503
985	1.1	8.8	1.4	530	**S101_1.4 S05 M05A4**	502	**S101_1.4 P63 BN63A4**	503

0.18 kW

n_2 min-1	M_2 Nm	S	i	R_{n2} N			IEC	
69	24.6	1.4	13.1	2400			**S301_13.1 P71 BN71A6**	507
73	23.2	2.5	12.4	3800	**S401_12.4 S1 M1SC6**	508	**S401_12.4 P71 BN71A6**	500
84	20.1	1.0	10.8	1500			**S201_10.8 P71 BN71A6**	505
84	20.0	2.9	10.7	3800	**S401_10.7 S1 M1SC6**	508	**S401_10.7 P71 BN71A6**	500
87	19.3	1.8	10.3	2400	**S301_10.3 S1 M1SC6**	506	**S301_10.3 P71 BN71A6**	507
101	16.6	2.1	8.9	2400	**S301_8.9 S1 M1SC6**	506	**S301_8.9 P71 BN71A6**	507
106	15.9	1.3	8.5	1500	**S201_8.5 S1 M1SC6**	504	**S201_8.5 P71 BN71A6**	505
106	15.9	1.9	13.1	2400			**S301_13.1 P63 BN63B4**	507
112	15.1	1.1	12.4	1500	**S201_12.4 S05 M05B4**	504	**S201_12.4 P63 BN63B4**	505
112	15.0	3.3	12.4	3800			**S401_12.4 P63 BN63B4**	509
125	13.5	2.2	7.2	1500	**S201_7.2 S1 M1SC6**	504	**S201_7.2 P71 BN71A6**	505
129	13.0	1.3	10.8	1500	**S201_10.8 S05 M05B4**	504	**S201_10.8 P63 BN63B4**	505
130	12.9	1.3	6.9	910	**S101_6.9 S1 M1SC6**	502	**S101_6.9 P71 BN71A6**	503
135	12.5	2.4	10.3	2330			**S301_10.3 P63 BN63B4**	507
147	11.4	1.5	6.1	890	**S101_6.1 S1 M1SC6**	502	**S101_6.1 P71 BN71A6**	503
155	10.9	2.8	5.8	1500	**S201_5.8 S1 M1SC6**	504	**S201_5.8 P71 BN71A6**	505
156	10.8	2.8	8.9	2230			**S301_8.9 P63 BN63B4**	507
157	10.8	0.9	8.9	880	**S101_8.9 S05 M05B4**	502	**S101_8.9 P63 BN63B4**	503
164	10.3	1.7	8.5	1500	**S201_8.5 S05 M05B4**	504	**S201_8.5 P63 BN63B4**	505
189	8.9	3.4	4.8	1500	**S201_4.8 S1 M1SC6**	504	**S201_4.8 P71 BN71A6**	505
190	8.8	1.6	4.7	830	**S101_4.7 S1 M1SC6**	502	**S101_4.7 P71 BN71A6**	503
192	8.8	3.0	7.2	1500	**S201_7.2 S05 M05B4**	504	**S201_7.2 P63 BN63B4**	505
201	8.4	1.8	6.9	820	**S101_6.9 S05 M05B4**	502	**S101_6.9 P63 BN63B4**	503
214	7.9	3.1	13.1	2020			**S301_13.1 P63 BN63A2**	507
226	7.5	1.7	12.4	1480	**S201_12.4 S05 M05A2**	504	**S201_12.4 P63 BN63A2**	505
227	7.4	2.0	6.1	800	**S101_6.1 S05 M05B4**	502	**S101_6.1 P63 BN63B4**	503
228	7.4	1.1	12.3	800	**S101_12.3 S05 M05A2**	502	**S101_12.3 P63 BN63A2**	503
234	7.2	1.9	3.8	790	**S101_3.8 S1 M1SC6**	502	**S101_3.8 P71 BN71A6**	503
261	6.4	2.0	10.8	1420	**S201_10.8 S05 M05A2**	504	**S201_10.8 P63 BN63A2**	505
273	6.2	1.3	10.3	760	**S101_10.3 S05 M05A2**	502	**S101_10.3 P63 BN63A2**	503
281	6.0	2.3	3.2	750	**S101_3.2 S1 M1SC6**	502	**S101_3.2 P71 BN71A6**	503
294	5.7	2.1	4.7	750	**S101_4.7 S05 M05B4**	502	**S101_4.7 P63 BN63B4**	503
317	5.3	1.5	8.9	730	**S101_8.9 S05 M05A2**	502	**S101_8.9 P63 BN63A2**	503
331	5.1	2.6	8.5	1320	**S201_8.5 S05 M05A2**	504	**S201_8.5 P63 BN63A2**	505
360	4.7	2.6	2.5	700	**S101_2.5 S1 M1SC6**	502	**S101_2.5 P71 BN71A6**	503
361	4.7	2.6	3.8	700	**S101_3.8 S05 M05B4**	502	**S101_3.8 P63 BN63B4**	503
407	4.1	2.9	6.9	680	**S101_6.9 S05 M05A2**	502	**S101_6.9 P63 BN63A2**	503
434	3.9	3.1	3.2	670	**S101_3.2 S05 M05B4**	502	**S101_3.2 P63 BN63B4**	503
460	3.7	3.3	6.1	660	**S101_6.1 S05 M05A2**	502	**S101_6.1 P63 BN63A2**	503

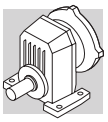

0.18 kW

n_2 min-1	M_2 Nm	S	i	R_{n2} N			IEC	
480	3.5	3.4	1.9	640	**S101_1.9 S1 M1SC6**	502	**S101_1.9 P71 BN71A6**	503
556	3.0	3.3	2.5	620	**S101_2.5 S05 M05B4**	502	**S101_2.5 P63 BN63B4**	503
594	2.8	3.5	4.7	610	**S101_4.7 S05 M05A2**	502	**S101_4.7 P63 BN63A2**	503
633	2.7	4.5	1.4	590	**S101_1.4 S1 M1SC6**	502	**S101_1.4 P71 BN71A6**	503
731	2.3	4.3	3.8	570	**S101_3.8 S05 M05A2**	502	**S101_3.8 P63 BN63A2**	503
741	2.3	4.4	1.9	570	**S101_1.9 S05 M05B4**	502	**S101_1.9 P63 BN63B4**	503
878	1.9	5.2	3.2	540	**S101_3.2 S05 M05A2**	502	**S101_3.2 P63 BN63A2**	503
978	1.7	5.8	1.4	520	**S101_1.4 S05 M05B4**	502	**S101_1.4 P63 BN63B4**	503
1124	1.5	5.3	2.5	500	**S101_2.5 S05 M05A2**	502	**S101_2.5 P63 BN63A2**	503
1499	1.1	7.1	1.9	460	**S101_1.9 S05 M05A2**	502	**S101_1.9 P63 BN63A2**	503
1977	0.9	9.4	1.4	420	**S101_1.4 S05 M05A2**	502	**S101_1.4 P63 BN63A2**	503

0.25 kW

n_2 min-1	M_2 Nm	S	i	R_{n2} N			IEC	
69	34.1	1.0	13.1	2400			**S301_13.1 P71 BN71B6**	507
70	33.5	3.0	12.9	6520	**S501_12.9 S1 M1SD6**	510	**S501_12.9 P71 BN71B6**	511
73	32.2	1.8	12.4	3800	**S401_12.4 S1 M1SD6**	508	**S401_12.4 P71 BN71B6**	509
84	27.7	2.1	10.7	3800	**S401_10.7 S1 M1SD6**	508	**S401_10.7 P71 BN71B6**	509
87	26.8	1.3	10.3	2400	**S301_10.3 S1 M1SD6**	506	**S301_10.3 P71 BN71B6**	507
101	23.1	1.5	8.9	2400	**S301_8.9 S1 M1SD6**	506	**S301_8.9 P71 BN71B6**	507
104	22.5	3.1	8.6	3800	**S401_8.6 S1 M1SD6**	508	**S401_8.6 P71 BN71B6**	509
105	22.3	1.3	13.1	2400			**S301_13.1 P71 BN71A4**	507
106	22.1	0.9	8.5	1500	**S201_8.5 S1 M1SD6**	504	**S201_8.5 P71 BN71B6**	505
111	21.1	2.4	12.4	3800			**S401_12.4 P71 BN71A4**	509
125	18.8	1.6	7.2	1500	**S201_7.2 S1 M1SD6**	504	**S201_7.2 P71 BN71B6**	505
127	18.4	3.1	7.1	2340	**S301_7.1 S1 M1SD6**	506	**S301_7.1 P71 BN71B6**	507
128	18.3	0.9	10.8	1500	**S201_10.8 S05 M05C4**	504	**S201_10.8 P71 BN71A4**	505
129	18.2	2.8	10.7	3800			**S401_10.7 P71 BN71A4**	509
130	17.9	0.9	6.9	850	**S101_6.9 S1 M1SD6**	502	**S101_6.9 P71 BN71B6**	503
133	17.5	1.7	10.3	2300			**S301_10.3 P71 BN71A4**	507
147	15.9	1.1	6.1	840	**S101_6.1 S1 M1SD6**	502	**S101_6.1 P71 BN71B6**	503
155	15.1	2.0	5.8	1500	**S201_5.8 S1 M1SD6**	504	**S201_5.8 P71 BN71B6**	505
155	15.1	2.0	8.9	2200			**S301_8.9 P71 BN71A4**	507
162	14.5	1.2	8.5	1500	**S201_8.5 S05 M05C4**	504	**S201_8.5 P71 BN71A4**	505
189	12.4	2.4	4.8	1500	**S201_4.8 S1 M1SD6**	504	**S201_4.8 P71 BN71B6**	505
190	12.3	1.1	4.7	790	**S101_4.7 S1 M1SD6**	502	**S101_4.7 P71 BN71B6**	503
190	12.3	2.1	7.2	1500	**S201_7.2 S05 M05C4**	504	**S201_7.2 P71 BN71A4**	505
199	11.7	1.3	6.9	780	**S101_6.9 S05 M05C4**	502	**S101_6.9 P71 BN71A4**	503
214	10.9	2.2	13.1	2000			**S301_13.1 P63 BN63B2**	507
225	10.4	1.4	6.1	770	**S101_6.1 S05 M05C4**	502	**S101_6.1 P71 BN71A4**	503
226	10.3	1.3	12.4	1450	**S201_12.4 S05 M05B2**	504	**S201_12.4 P63 BN63B2**	505
229	10.2	2.9	3.9	1440	**S201_3.9 S1 M1SD6**	504	**S201_3.9 P71 BN71B6**	505
234	10.0	1.4	3.8	750	**S101_3.8 S1 M1SD6**	502	**S101_3.8 P71 BN71B6**	503
236	9.9	2.6	5.8	1430	**S201_5.8 S05 M05C4**	504	**S201_5.8 P71 BN71A4**	505
261	9.0	1.5	10.8	1390	**S201_10.8 S05 M05B2**	504	**S201_10.8 P63 BN63B2**	505
273	8.6	2.8	10.3	1860			**S301_10.3 P63 BN63B2**	507
273	8.6	0.9	10.3	730	**S101_10.3 S05 M05B2**	502	**S101_10.3 P63 BN63B2**	503

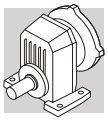

0.25 kW

n_2 min-1	M_2 Nm	S	i	R_{n2} N			IEC	
281	8.3	1.7	3.2	720	**S101_3.2 S1 M1SD6**	502	**S101_3.2 P71 BN71B6**	503
288	8.1	3.2	4.8	1350	**S201_4.8 S05 M05C4**	504	**S201_4.8 P71 BN71A4**	505
291	8.0	1.5	4.7	720	**S101_4.7 S05 M05C4**	502	**S101_4.7 P71 BN71A4**	503
316	7.4	3.2	8.9	1770			**S301_8.9 P63 BN63B2**	507
317	7.4	1.1	8.9	710	**S101_8.9 S05 M05B2**	502	**S101_8.9 P63 BN63B2**	503
331	7.1	1.8	8.5	1300	**S201_8.5 S05 M05B2**	504	**S201_8.5 P63 BN63B2**	505
358	6.5	1.8	3.8	680	**S101_3.8 S05 M05C4**	502	**S101_3.8 P71 BN71A4**	503
360	6.5	1.8	2.5	680	**S101_2.5 S1 M1SD6**	502	**S101_2.5 P71 BN71B6**	503
389	6.0	3.5	7.2	1240	**S201_7.2 S05 M05B2**	504	**S201_7.2 P63 BN63B2**	505
407	5.7	2.1	6.9	660	**S101_6.9 S05 M05B2**	502	**S101_6.9 P63 BN63B2**	503
430	5.4	2.2	3.2	650	**S101_3.2 S05 M05C4**	502	**S101_3.2 P71 BN71A4**	503
460	5.1	2.4	6.1	640	**S101_6.1 S05 M05B2**	502	**S101_6.1 P63 BN63B2**	503
480	4.9	2.5	1.9	620	**S101_1.9 S1 M1SD6**	502	**S101_1.9 P71 BN71B6**	503
550	4.3	2.4	2.5	610	**S101_2.5 S05 M05C4**	502	**S101_2.5 P71 BN71A4**	503
594	3.9	2.5	4.7	600	**S101_4.7 S05 M05B2**	502	**S101_4.7 P63 BN63B2**	503
633	3.7	3.2	1.4	580	**S101_1.4 S1 M1SD6**	502	**S101_1.4 P71 BN71B6**	503
731	3.2	3.1	3.8	560	**S101_3.8 S05 M05B2**	502	**S101_3.8 P63 BN63B2**	503
733	3.2	3.1	1.9	560	**S101_1.9 S05 M05C4**	502	**S101_1.9 P71 BN71A4**	503
878	2.7	3.8	3.2	530	**S101_3.2 S05 M05B2**	502	**S101_3.2 P63 BN63B2**	503
968	2.4	4.1	1.4	510	**S101_1.4 S05 M05C4**	502	**S101_1.4 P71 BN71A4**	503
1124	2.1	3.8	2.5	500	**S101_2.5 S05 M05B2**	502	**S101_2.5 P63 BN63B2**	503
1499	1.6	5.1	1.9	450	**S101_1.9 S05 M05B2**	502	**S101_1.9 P63 BN63B2**	503
1977	1.2	6.8	1.4	420	**S101_1.4 S05 M05B2**	502	**S101_1.4 P63 BN63B2**	503

0.37 kW

n_2 min-1	M_2 Nm	S	i	R_{n2} N			IEC	
71	49.0	2.0	12.9	6420	**S501_12.9 S1 M1LA6**	510	**S501_12.9 P80 BN80A6**	511
73	47.2	1.2	12.4	3800	**S401_12.4 S1 M1LA6**	508	**S401_12.4 P80 BN80A6**	509
85	40.6	1.4	10.7	3800	**S401_10.7 S1 M1LA6**	508	**S401_10.7 P80 BN80A6**	509
87	39.8	2.9	10.5	6020	**S501_10.5 S1 M1LA6**	510	**S501_10.5 P80 BN80A6**	511
102	33.8	1.0	8.9	2400	**S301_8.9 S1 M1LA6**	506	**S301_8.9 P80 BN80A6**	507
104	33.2	0.9	13.1	2390			**S301_13.1 P71 BN71B4**	507
105	32.9	2.1	8.6	3800	**S401_8.6 S1 M1LA6**	508	**S401_8.6 P80 BN80A6**	509
106	32.6	3.1	12.9	5650	**S501_12.9 S1 M1SD4**	510	**S501_12.9 P71 BN71B4**	511
110	31.3	1.6	12.4	3800	**S401_12.4 S1 M1SD4**	508	**S401_12.4 P71 BN71B4**	509
126	27.5	1.1	7.2	1500	**S201_7.2 S1 M1LA6**	504	**S201_7.2 P80 BN80A6**	505
127	27.2	3.3	7.2	3800	**S401_7.2 S1 M1LA6**	508	**S401_7.2 P80 BN80A6**	509
128	27.0	2.1	7.1	2260	**S301_7.1 S1 M1LA6**	506	**S301_7.1 P80 BN80A6**	507
128	27.0	1.9	10.7	3800	**S401_10.7 S1 M1SD4**	508	**S401_10.7 P71 BN71B4**	509
133	26.0	1.2	10.3	2240	**S301_10.3 S1 M1SD4**	506	**S301_10.3 P71 BN71B4**	507
154	22.5	1.3	8.9	2150	**S301_8.9 S1 M1SD4**	506	**S301_8.9 P71 BN71B4**	507
156	22.2	2.6	5.8	2140	**S301_5.8 S1 M1LA6**	506	**S301_5.8 P80 BN80A6**	507
156	22.1	1.4	5.8	1500	**S201_5.8 S1 M1LA6**	504	**S201_5.8 P80 BN80A6**	505
159	21.8	2.7	8.6	3610	**S401_8.6 S1 M1SD4**	508	**S401_8.6 P71 BN71B4**	509
184	18.8	3.1	4.9	2040	**S301_4.9 S1 M1LA6**	506	**S301_4.9 P80 BN80A6**	507
190	18.3	1.4	7.2	1460	**S201_7.2 S1 M1SD4**	504	**S201_7.2 P71 BN71B4**	505
191	18.1	1.7	4.8	1460	**S201_4.8 S1 M1LA6**	504	**S201_4.8 P80 BN80A6**	505

0.37 kW

n_2 min-1	M_2 Nm	S	i	R_{n2} N			IEC	
193	17.9	2.8	7.1	2020	**S301_7.1 S1 M1SD4**	506	**S301_7.1 P71 BN71B4**	507
214	16.2	1.5	13.1	1960			**S301_13.1 P71 BN71A2**	507
224	15.4	1.0	6.1	710	**S101_6.1 S1 M1SD4**	502	**S101_6.1 P71 BN71B4**	503
227	15.3	2.6	12.4	3230			**S401_12.4 P71 BN71A2**	509
231	15.0	2.0	3.9	1380	**S201_3.9 S1 M1LA6**	504	**S201_3.9 P80 BN80A6**	505
234	14.8	3.4	5.8	1900	**S301_5.8 S1 M1SD4**	506	**S301_5.8 P71 BN71B4**	507
235	14.7	1.8	5.8	1390	**S201_5.8 S1 M1SD4**	504	**S201_5.8 P71 BN71B4**	505
237	14.6	1.0	3.8	690	**S101_3.8 S1 M1LA6**	502	**S101_3.8 P80 BN80A6**	503
261	13.2	1.0	10.8	1350	**S201_10.8 S05 M05C2**	504	**S201_10.8 P71 BN71A2**	505
263	13.1	3.0	10.7	3080			**S401_10.7 P71 BN71A2**	509
273	12.7	1.9	10.3	1820			**S301_10.3 P71 BN71A2**	507
284	12.2	1.1	3.2	670	**S101_3.2 S1 M1LA6**	502	**S101_3.2 P80 BN80A6**	503
287	12.1	2.2	4.8	1310	**S201_4.8 S1 M1SD4**	504	**S201_4.8 P71 BN71B4**	505
290	11.9	1.0	4.7	670	**S101_4.7 S1 M1SD4**	502	**S101_4.7 P71 BN71B4**	503
293	11.8	2.5	3.1	1300	**S201_3.1 S1 M1LA6**	504	**S201_3.1 P80 BN80A6**	505
316	11.0	2.2	8.9	1740			**S301_8.9 P71 BN71A2**	507
331	10.5	1.2	8.5	1270	**S201_8.5 S05 M05C2**	504	**S201_8.5 P71 BN71A2**	505
348	9.9	2.6	3.9	1240	**S201_3.9 S1 M1SD4**	504	**S201_3.9 P71 BN71B4**	505
356	9.7	1.2	3.8	640	**S101_3.8 S1 M1SD4**	502	**S101_3.8 P71 BN71B4**	503
364	9.5	1.3	2.5	630	**S101_2.5 S1 M1LA6**	502	**S101_2.5 P80 BN80A6**	503
373	9.3	3.2	2.4	1210	**S201_2.4 S1 M1LA6**	504	**S201_2.4 P80 BN80A6**	505
389	8.9	2.4	7.2	1210	**S201_7.2 S05 M05C2**	504	**S201_7.2 P71 BN71A2**	505
407	8.5	1.4	6.9	630	**S101_6.9 S05 M05C2**	502	**S101_6.9 P71 BN71A2**	503
428	8.1	1.5	3.2	620	**S101_3.2 S1 M1SD4**	502	**S101_3.2 P71 BN71B4**	503
440	7.9	3.3	3.1	1160	**S201_3.1 S1 M1SD4**	504	**S201_3.1 P71 BN71B4**	505
460	7.5	1.6	6.1	610	**S101_6.1 S05 M05C2**	502	**S101_6.1 P71 BN71A2**	503
480	7.2	2.8	1.9	1130	**S201_1.9 S1 M1LA6**	504	**S201_1.9 P80 BN80A6**	505
483	7.2	2.9	5.8	1130	**S201_5.8 S05 M05C2**	504	**S201_5.8 P71 BN71A2**	505
485	7.1	1.7	1.9	590	**S101_1.9 S1 M1LA6**	502	**S101_1.9 P80 BN80A6**	503
548	6.3	1.6	2.5	580	**S101_2.5 S1 M1SD4**	502	**S101_2.5 P71 BN71B4**	503
594	5.8	1.7	4.7	570	**S101_4.7 S05 M05C2**	502	**S101_4.7 P71 BN71A2**	503
640	5.4	2.2	1.4	550	**S101_1.4 S1 M1LA6**	502	**S101_1.4 P80 BN80A6**	503
731	4.7	2.1	3.8	540	**S101_3.8 S05 M05C2**	502	**S101_3.8 P71 BN71A2**	503
731	4.7	2.1	1.9	540	**S101_1.9 S1 M1SD4**	502	**S101_1.9 P71 BN71B4**	503
878	3.9	2.5	3.2	520	**S101_3.2 S05 M05C2**	502	**S101_3.2 P71 BN71A2**	503
964	3.6	2.8	1.4	500	**S101_1.4 S1 M1SD4**	502	**S101_1.4 P71 BN71B4**	503
1124	3.1	2.6	2.5	480	**S101_2.5 S05 M05C2**	502	**S101_2.5 P71 BN71A2**	503
1499	2.3	3.5	1.9	440	**S101_1.9 S05 M05C2**	502	**S101_1.9 P71 BN71A2**	503
1977	1.8	4.6	1.4	410	**S101_1.4 S05 M05C2**	502	**S101_1.4 P71 BN71A2**	503

0.55 kW

n_2 min-1	M_2 Nm	S	i	R_{n2} N			IEC	
71	72.1	1.4	12.9	6290	**S501_12.9 S2 M2SA6**	510	**S501_12.9 P80 BN80B6**	511
86	59.7	1.0	10.7	3800	**S401_10.7 S2 M2SA6**	508	**S401_10.7 P80 BN80B6**	509
88	58.5	2.0	10.5	5910	**S501_10.5 S2 M2SA6**	510	**S501_10.5 P80 BN80B6**	511
105	49.1	2.5	8.8	5600	**S501_8.8 S2 M2SA6**	510	**S501_8.8 P80 BN80B6**	511
107	48.3	1.4	8.6	3800	**S401_8.6 S2 M2SA6**	508	**S401_8.6 P80 BN80B6**	509

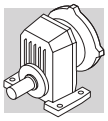

0.55 kW

n_2 min-1	M_2 Nm	S	i	R_{n2} N			IEC	
107	48.1	2.1	12.9	5560	**S501_12.9 S1 M1LA4**	510	**S501_12.9 P80 BN80A4**	511
111	46.3	1.1	12.4	3800	**S401_12.4 S1 M1LA4**	508	**S401_12.4 P80 BN80A4**	509
124	41.4	3.4	7.4	5310	**S501_7.4 S2 M2SA6**	510	**S501_7.4 P80 BN80B6**	511
129	40.0	2.2	7.2	3780	**S401_7.2 S2 M2SA6**	508	**S401_7.2 P80 BN80B6**	509
129	39.8	1.3	10.7	3770	**S401_10.7 S1 M1LA4**	508	**S401_10.7 P80 BN80A4**	509
130	39.7	1.5	7.1	2150	**S301_7.1 S2 M2SA6**	506	**S301_7.1 P80 BN80B6**	507
132	39.0	2.8	10.5	5220	**S501_10.5 S1 M1LA4**	510	**S501_10.5 P80 BN80A4**	511
152	33.9	3.1	6.1	3600	**S401_6.1 S2 M2SA6**	508	**S401_6.1 P80 BN80B6**	509
155	33.2	0.9	8.9	2060	**S301_8.9 S1 M1LA4**	506	**S301_8.9 P80 BN80A4**	507
157	32.7	1.8	5.8	2050	**S301_5.8 S2 M2SA6**	506	**S301_5.8 P80 BN80B6**	507
157	32.7	3.4	8.8	4940	**S501_8.8 S1 M1LA4**	510	**S501_8.8 P80 BN80A4**	511
158	32.6	0.9	5.8	1420	**S201_5.8 S2 M2SA6**	504	**S201_5.8 P80 BN80B6**	505
160	32.2	1.9	8.6	3540	**S401_8.6 S1 M1LA4**	508	**S401_8.6 P80 BN80A4**	509
186	27.6	2.1	4.9	1960	**S301_4.9 S2 M2SA6**	506	**S301_4.9 P80 BN80B6**	507
191	26.9	1.0	7.2	1370	**S201_7.2 S1 M1LA4**	504	**S201_7.2 P80 BN80A4**	505
193	26.7	1.1	4.8	1370	**S201_4.8 S2 M2SA6**	504	**S201_4.8 P80 BN80B6**	505
193	26.7	3.0	7.2	3350	**S401_7.2 S1 M1LA4**	508	**S401_7.2 P80 BN80A4**	509
195	26.4	1.9	7.1	1940	**S301_7.1 S1 M1LA4**	506	**S301_7.1 P80 BN80A4**	507
214	24.0	1.0	13.1	1900			**S301_13.1 P71 BN71B2**	507
218	23.6	3.4	12.9	4460	**S501_12.9 S1 M1SD2**	510	**S501_12.9 P71 BN71B2**	511
227	22.7	1.8	12.4	3190	**S401_12.4 S1 M1SD2**	508	**S401_12.4 P71 BN71B2**	509
233	22.1	2.6	3.9	1850	**S301_3.9 S2 M2SA6**	506	**S301_3.9 P80 BN80B6**	507
234	22.0	1.4	3.9	1300	**S201_3.9 S2 M2SA6**	504	**S201_3.9 P80 BN80B6**	505
236	21.8	2.3	5.8	1840	**S301_5.8 S1 M1LA4**	506	**S301_5.8 P80 BN80A4**	507
237	21.7	1.2	5.8	1310	**S201_5.8 S1 M1LA4**	504	**S201_5.8 P80 BN80A4**	505
263	19.5	2.0	10.7	3040	**S401_10.7 S1 M1SD2**	508	**S401_10.7 P71 BN71B2**	509
273	18.9	1.3	10.3	1780	**S301_10.3 S1 M1SD2**	506	**S301_10.3 P71 BN71B2**	507
280	18.4	2.7	4.9	1760	**S301_4.9 S1 M1LA4**	506	**S301_4.9 P80 BN80A4**	507
289	17.8	1.5	4.8	1250	**S201_4.8 S1 M1LA4**	504	**S201_4.8 P80 BN80A4**	505
296	17.4	1.7	3.1	1230	**S201_3.1 S2 M2SA6**	504	**S201_3.1 P80 BN80B6**	505
300	17.1	3.4	3.1	1720	**S301_3.1 S2 M2SA6**	506	**S301_3.1 P80 BN80B6**	507
316	16.3	1.5	8.9	1700	**S301_8.9 S1 M1SD2**	506	**S301_8.9 P71 BN71B2**	507
325	15.8	3.0	8.6	2850	**S401_8.6 S1 M1SD2**	508	**S401_8.6 P71 BN71B2**	509
350	14.7	3.4	3.9	1650	**S301_3.9 S1 M1LA4**	506	**S301_3.9 P80 BN80A4**	507
351	14.7	1.8	3.9	1190	**S201_3.9 S1 M1LA4**	504	**S201_3.9 P80 BN80A4**	505
377	13.6	2.2	2.4	1160	**S201_2.4 S2 M2SA6**	504	**S201_2.4 P80 BN80B6**	505
389	13.2	1.6	7.2	1160	**S201_7.2 S1 M1SD2**	504	**S201_7.2 P71 BN71B2**	505
396	13.0	3.1	7.1	1600	**S301_7.1 S1 M1SD2**	506	**S301_7.1 P71 BN71B2**	507
407	12.6	0.9	6.9	570	**S101_6.9 S1 M1SD2**	502	**S101_6.9 P71 BN71B2**	503
431	11.9	1.0	3.2	560	**S101_3.2 S1 M1LA4**	502	**S101_3.2 P80 BN80A4**	503
444	11.6	2.2	3.1	1120	**S201_3.1 S1 M1LA4**	504	**S201_3.1 P80 BN80A4**	505
460	11.2	1.1	6.1	570	**S101_6.1 S1 M1SD2**	502	**S101_6.1 P71 BN71B2**	503
483	10.7	2.0	5.8	1100	**S201_5.8 S1 M1SD2**	504	**S201_5.8 P71 BN71B2**	505
486	10.6	1.9	1.9	1080	**S201_1.9 S2 M2SA6**	504	**S201_1.9 P80 BN80B6**	505
491	10.5	1.1	1.9	540	**S101_1.9 S2 M2SA6**	502	**S101_1.9 P80 BN80B6**	503
504	10.2	3.4	1.8	1470	**S301_1.8 S2 M2SA6**	506	**S301_1.8 P80 BN80B6**	507
552	9.3	1.1	2.5	540	**S101_2.5 S1 M1LA4**	502	**S101_2.5 P80 BN80A4**	503
566	9.1	2.9	2.4	1050	**S201_2.4 S1 M1LA4**	504	**S201_2.4 P80 BN80A4**	505
589	8.7	2.4	4.8	1040	**S201_4.8 S1 M1SD2**	504	**S201_4.8 P71 BN71B2**	505
594	8.7	1.2	4.7	540	**S101_4.7 S1 M1SD2**	502	**S101_4.7 P71 BN71B2**	503
647	8.0	1.5	1.4	510	**S101_1.4 S2 M2SA6**	502	**S101_1.4 P80 BN80B6**	503

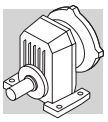

0.55 kW

n_2 min-1	M_2 Nm	S	i	R_{n2} N			IEC	
661	7.8	2.6	1.4	990	**S201_1.4 S2 M2SA6**	504	**S201_1.4 P80 BN80B6**	505
714	7.2	2.9	3.9	980	**S201_3.9 S1 M1SD2**	504	**S201_3.9 P71 BN71B2**	505
728	7.1	2.4	1.9	970	**S201_1.9 S1 M1LA4**	504	**S201_1.9 P80 BN80A4**	505
731	7.0	1.4	3.8	510	**S101_3.8 S1 M1SD2**	502	**S101_3.8 P71 BN71B2**	503
736	7.0	1.4	1.9	500	**S101_1.9 S1 M1LA4**	502	**S101_1.9 P80 BN80A4**	503
878	5.9	1.7	3.2	490	**S101_3.2 S1 M1SD2**	502	**S101_3.2 P71 BN71B2**	503
971	5.3	1.9	1.4	470	**S101_1.4 S1 M1LA4**	502	**S101_1.4 P80 BN80A4**	503
992	5.2	3.3	1.4	890			**S201_1.4 P80 BN80A4**	505
1124	4.6	1.7	2.5	460	**S101_2.5 S1 M1SD2**	502	**S101_2.5 P71 BN71B2**	503
1499	3.4	2.3	1.9	430	**S101_1.9 S1 M1SD2**	502	**S101_1.9 P71 BN71B2**	503
1977	2.6	3.1	1.4	390	**S101_1.4 S1 M1SD2**	502	**S101_1.4 P71 BN71B2**	503

0.75 kW

n_2 min-1	M_2 Nm	S	i	R_{n2} N			IEC	
71	98.3	1.0	12.9	6170	**S501_12.9 S2 M2SB6**	510	**S501_12.9 P90 BN90S6**	511
88	79.8	1.4	10.5	5810	**S501_10.5 S2 M2SB6**	510	**S501_10.5 P90 BN90S6**	511
105	66.9	1.9	8.8	5520	**S501_8.8 S2 M2SB6**	510	**S501_8.8 P90 BN90S6**	511
107	65.9	1.1	8.6	3800	**S401_8.6 S2 M2SB6**	508	**S401_8.6 P90 BN90S6**	509
109	64.6	1.5	12.9	5460	**S501_12.9 S2 M2SA4**	510	**S501_12.9 P80 BN80B4**	511
124	56.5	2.5	7.4	5240	**S501_7.4 S2 M2SB6**	510	**S501_7.4 P90 BN90S6**	511
129	54.6	1.6	7.2	3700	**S401_7.2 S2 M2SB6**	508	**S401_7.2 P90 BN90S6**	509
130	54.1	1.1	7.1	2040	**S301_7.1 S2 M2SB6**	506	**S301_7.1 P90 BN90S6**	507
131	53.5	0.9	10.7	3670	**S401_10.7 S2 M2SA4**	508	**S401_10.7 P80 BN80B4**	509
134	52.4	2.1	10.5	5130	**S501_10.5 S2 M2SA4**	510	**S501_10.5 P80 BN80B4**	511
152	46.3	2.3	6.1	3530	**S401_6.1 S2 M2SB6**	508	**S401_6.1 P90 BN90S6**	509
152	46.2	3.2	6.1	4940	**S501_6.1 S2 M2SB6**	510	**S501_6.1 P90 BN90S6**	511
157	44.6	1.3	5.8	1960	**S301_5.8 S2 M2SB6**	506	**S301_5.8 P90 BN90S6**	507
160	44.0	2.5	8.8	4870	**S501_8.8 S2 M2SA4**	510	**S501_8.8 P80 BN80B4**	511
162	43.3	1.4	8.6	3460	**S401_8.6 S2 M2SA4**	508	**S401_8.6 P80 BN80B4**	509
186	37.6	1.5	4.9	1880	**S301_4.9 S2 M2SB6**	506	**S301_4.9 P90 BN90S6**	507
190	36.9	2.8	4.8	3300	**S401_4.8 S2 M2SB6**	508	**S401_4.8 P90 BN90S6**	509
196	35.9	2.2	7.2	3280	**S401_7.2 S2 M2SA4**	508	**S401_7.2 P80 BN80B4**	509
197	35.6	1.4	7.1	1860	**S301_7.1 S2 M2SA4**	506	**S301_7.1 P80 BN80B4**	507
217	32.3	2.5	12.9	4420	**S501_12.9 S1 M1LA2**	510	**S501_12.9 P80 BN80A2**	511
226	31.1	1.3	12.4	3150	**S401_12.4 S1 M1LA2**	508	**S401_12.4 P80 BN80A2**	509
231	30.4	3.0	6.1	3120	**S401_6.1 S2 M2SA4**	508	**S401_6.1 P80 BN80B4**	509
233	30.1	1.9	3.9	1780	**S301_3.9 S2 M2SB6**	506	**S301_3.9 P90 BN90S6**	507
234	30.0	1.0	3.9	1220	**S201_3.9 S2 M2SB6**	504	**S201_3.9 P90 BN90S6**	505
239	29.3	1.7	5.8	1780	**S301_5.8 S2 M2SA4**	506	**S301_5.8 P80 BN80B4**	507
263	26.7	1.5	10.7	3000	**S401_10.7 S1 M1LA2**	508	**S401_10.7 P80 BN80A2**	509
268	26.2	3.2	10.5	4140	**S501_10.5 S1 M1LA2**	510	**S501_10.5 P80 BN80A2**	511
272	25.8	0.9	10.3	1730	**S301_10.3 S1 M1LA2**	506	**S301_10.3 P80 BN80A2**	507
284	24.7	2.0	4.9	1700	**S301_4.9 S2 M2SA4**	506	**S301_4.9 P80 BN80B4**	507
294	23.9	1.1	4.8	1180	**S201_4.8 S2 M2SA4**	504	**S201_4.8 P80 BN80B4**	505
296	23.7	1.3	3.1	1160	**S201_3.1 S2 M2SB6**	504	**S201_3.1 P90 BN90S6**	505
300	23.4	2.5	3.1	1670	**S301_3.1 S2 M2SB6**	506	**S301_3.1 P90 BN90S6**	507
315	22.3	1.1	8.9	1660	**S301_8.9 S1 M1LA2**	506	**S301_8.9 P80 BN80A2**	507

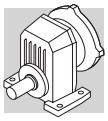

0.75 kW

n_2 min-1	M_2 Nm	S	i	R_{n2} N			IEC	
324	21.7	2.2	8.6	2820	**S401_8.6 S1 M1LA2**	508	**S401_8.6 P80 BN80A2**	509
355	19.8	2.5	3.9	1600	**S301_3.9 S2 M2SA4**	506	**S301_3.9 P80 BN80B4**	507
356	19.7	1.3	3.9	1130	**S201_3.9 S2 M2SA4**	504	**S201_3.9 P80 BN80B4**	505
377	18.6	1.6	2.4	1110	**S201_2.4 S2 M2SB6**	504	**S201_2.4 P90 BN90S6**	505
380	18.5	3.1	2.4	1560	**S301_2.4 S2 M2SB6**	506	**S301_2.4 P90 BN90S6**	507
388	18.1	1.2	7.2	1120	**S201_7.2 S1 M1LA2**	504	**S201_7.2 P80 BN80A2**	505
395	17.8	2.3	7.1	1560	**S301_7.1 S1 M1LA2**	506	**S301_7.1 P80 BN80A2**	507
450	15.6	1.7	3.1	1070	**S201_3.1 S2 M2SA4**	504	**S201_3.1 P80 BN80B4**	505
457	15.4	3.3	3.1	1490	**S301_3.1 S2 M2SA4**	506	**S301_3.1 P80 BN80B4**	507
479	14.7	2.7	5.8	1480	**S301_5.8 S1 M1LA2**	506	**S301_5.8 P80 BN80A2**	507
481	14.6	1.4	5.8	1060	**S201_5.8 S1 M1LA2**	504	**S201_5.8 P80 BN80A2**	505
486	14.5	1.4	1.9	1040	**S201_1.9 S2 M2SB6**	504	**S201_1.9 P90 BN90S6**	505
504	13.9	2.5	1.8	1440	**S301_1.8 S2 M2SB6**	506	**S301_1.8 P90 BN90S6**	507
568	12.4	3.2	4.9	1410	**S301_4.9 S1 M1LA2**	506	**S301_4.9 P80 BN80A2**	507
574	12.2	2.1	2.4	1010	**S201_2.4 S2 M2SA4**	504	**S201_2.4 P80 BN80B4**	505
587	12.0	1.8	4.8	1010	**S201_4.8 S1 M1LA2**	504	**S201_4.8 P80 BN80A2**	505
647	10.8	1.1	1.4	460	**S101_1.4 S2 M2SB6**	502	**S101_1.4 P90 BN90S6**	503
654	10.7	3.3	1.4	1330	**S301_1.4 S2 M2SB6**	506	**S301_1.4 P90 BN90S6**	507
661	10.6	1.9	1.4	960	**S201_1.4 S2 M2SB6**	504	**S201_1.4 P90 BN90S6**	505
712	9.9	2.1	3.9	960	**S201_3.9 S1 M1LA2**	504	**S201_3.9 P80 BN80A2**	505
728	9.6	1.0	3.8	480	**S101_3.8 S1 M1LA2**	502	**S101_3.8 P80 BN80A2**	503
739	9.5	1.8	1.9	940	**S201_1.9 S2 M2SA4**	504	**S201_1.9 P80 BN80B4**	505
747	9.4	1.1	1.9	460	**S101_1.9 S2 M2SA4**	502	**S101_1.9 P80 BN80B4**	503
767	9.2	3.3	1.8	1280	**S301_1.8 S2 M2SA4**	506	**S301_1.8 P80 BN80B4**	507
875	8.0	1.2	3.2	460	**S101_3.2 S1 M1LA2**	502	**S101_3.2 P80 BN80A2**	503
900	7.8	2.7	3.1	900	**S201_3.1 S1 M1LA2**	504	**S201_3.1 P80 BN80A2**	505
985	7.1	1.4	1.4	440	**S101_1.4 S2 M2SA4**	502	**S101_1.4 P80 BN80B4**	503
1006	7.0	2.4	1.4	860	**S201_1.4 S2 M2SA4**	504	**S201_1.4 P80 BN80B4**	505
1120	6.3	1.3	2.5	440	**S101_2.5 S1 M1LA2**	502	**S101_2.5 P80 BN80A2**	503
1149	6.1	3.4	2.4	840	**S201_2.4 S1 M1LA2**	504	**S201_2.4 P80 BN80A2**	505
1478	4.7	2.7	1.9	780	**S201_1.9 S1 M1LA2**	504	**S201_1.9 P80 BN80A2**	505
1493	4.7	1.7	1.9	410	**S101_1.9 S1 M1LA2**	502	**S101_1.9 P80 BN80A2**	503
1970	3.6	2.2	1.4	380	**S101_1.4 S1 M1LA2**	502	**S101_1.4 P80 BN80A2**	503

1.1 kW

n_2 min-1	M_2 Nm	S	i	R_{n2} N			IEC	
88	117.0	1.0	10.5	5650	**S501_10.5 S3 M3SA6**	510	**S501_10.5 P90 BN90L6**	511
105	98.1	1.3	8.8	5380	**S501_8.8 S3 M3SA6**	510	**S501_8.8 P90 BN90L6**	511
109	94.8	1.1	12.9	5320	**S501_12.9 S2 M2SB4**	510	**S501_12.9 P90 BN90S4**	511
124	82.8	1.7	7.4	5120	**S501_7.4 S3 M3SA6**	510	**S501_7.4 P90 BN90L6**	511
129	80.1	1.1	7.2	3550	**S401_7.2 S3 M3SA6**	508	**S401_7.2 P90 BN90L6**	509
134	76.9	1.4	10.5	5020	**S501_10.5 S2 M2SB4**	510	**S501_10.5 P90 BN90S4**	511
152	67.9	1.5	6.1	3400	**S401_6.1 S3 M3SA6**	508	**S401_6.1 P90 BN90L6**	509
152	67.8	2.2	6.1	4840	**S501_6.1 S3 M3SA6**	510	**S501_6.1 P90 BN90L6**	511
160	64.5	1.7	8.8	4770	**S501_8.8 S2 M2SB4**	510	**S501_8.8 P90 BN90S4**	511
162	63.5	0.9	8.6	3350	**S401_8.6 S2 M2SB4**	508	**S401_8.6 P90 BN90S4**	509
186	55.2	1.1	4.9	1740	**S301_4.9 S3 M3SA6**	506	**S301_4.9 P90 BN90L6**	507

1.1 kW

n_2 min-1	M_2 Nm	S	i	R_{n2} N			IEC	
189	54.4	2.4	7.4	4530	**S501_7.4 S2 M2SB4**	510	**S501_7.4 P90 BN90S4**	511
190	54.1	1.9	4.8	3200	**S401_4.8 S3 M3SA6**	508	**S401_4.8 P90 BN90L6**	509
194	53.2	3.3	4.8	4500	**S501_4.8 S3 M3SA6**	510	**S501_4.8 P90 BN90L6**	511
196	52.6	1.5	7.2	3180	**S401_7.2 S2 M2SB4**	508	**S401_7.2 P90 BN90S4**	509
197	52.1	1.0	7.1	1730	**S301_7.1 S2 M2SB4**	506	**S301_7.1 P90 BN90S4**	507
217	47.4	1.7	12.9	4350	**S501_12.9 S2 M2SA2**	510	**S501_12.9 P80 BN80B2**	511
231	44.6	2.0	6.1	3040	**S401_6.1 S2 M2SB4**	508	**S401_6.1 P90 BN90S4**	509
231	44.5	2.9	6.1	4270	**S501_6.1 S2 M2SB4**	510	**S501_6.1 P90 BN90S4**	511
233	44.1	1.3	3.9	1670	**S301_3.9 S3 M3SA6**	506	**S301_3.9 P90 BN90L6**	507
239	43.0	1.2	5.8	1670	**S301_5.8 S2 M2SB4**	506	**S301_5.8 P90 BN90S4**	507
241	42.7	2.5	3.8	2990	**S401_3.8 S3 M3SA6**	508	**S401_3.8 P90 BN90L6**	509
263	39.2	1.0	10.7	2930	**S401_10.7 S2 M2SA2**	508	**S401_10.7 P80 BN80B2**	509
268	38.4	2.2	10.5	4090	**S501_10.5 S2 M2SA2**	510	**S501_10.5 P80 BN80B2**	511
284	36.3	1.4	4.9	1610	**S301_4.9 S2 M2SB4**	506	**S301_4.9 P90 BN90S4**	507
290	35.5	2.5	4.8	2850	**S401_4.8 S2 M2SB4**	508	**S401_4.8 P90 BN90S4**	509
300	34.3	1.7	3.1	1580	**S301_3.1 S3 M3SA6**	506	**S301_3.1 P90 BN90L6**	507
301	34.2	3.1	3.1	2810	**S401_3.1 S3 M3SA6**	508	**S401_3.1 P90 BN90L6**	509
319	32.2	2.6	8.8	3870	**S501_8.8 S2 M2SA2**	510	**S501_8.8 P80 BN80B2**	511
324	31.8	1.5	8.6	2760	**S401_8.6 S2 M2SA2**	508	**S401_8.6 P80 BN80B2**	509
355	29.0	1.7	3.9	1530	**S301_3.9 S2 M2SB4**	506	**S301_3.9 P90 BN90S4**	507
367	28.0	3.2	3.8	2650	**S401_3.8 S2 M2SB4**	508	**S401_3.8 P90 BN90S4**	509
377	27.3	1.1	2.4	1010	**S201_2.4 S3 M3SA6**	504	**S201_2.4 P90 BN90L6**	505
380	27.1	2.1	2.4	1490	**S301_2.4 S3 M3SA6**	506	**S301_2.4 P90 BN90L6**	507
391	26.3	2.4	7.2	2610	**S401_7.2 S2 M2SA2**	508	**S401_7.2 P80 BN80B2**	509
395	26.1	1.5	7.1	1500	**S301_7.1 S2 M2SA2**	506	**S301_7.1 P80 BN80B2**	507
450	22.9	1.1	3.1	990	**S201_3.1 S2 M2SB4**	504	**S201_3.1 P90 BN90S4**	505
457	22.5	2.2	3.1	1430	**S301_3.1 S2 M2SB4**	506	**S301_3.1 P90 BN90S4**	507
462	22.3	3.1	6.1	2490	**S401_6.1 S2 M2SA2**	508	**S401_6.1 P80 BN80B2**	509
479	21.5	1.9	5.8	1420	**S301_5.8 S2 M2SA2**	506	**S301_5.8 P80 BN80B2**	507
481	21.4	1.0	5.8	990	**S201_5.8 S2 M2SA2**	504	**S201_5.8 P80 BN80B2**	505
486	21.2	0.9	1.9	960	**S201_1.9 S3 M3SA6**	504	**S201_1.9 P90 BN90L6**	505
497	20.7	3.4	1.9	2420	**S401_1.9 S3 M3SA6**	508	**S401_1.9 P90 BN90L6**	509
504	20.4	1.7	1.8	1380	**S301_1.8 S3 M3SA6**	506	**S301_1.8 P90 BN90L6**	507
568	18.1	2.2	4.9	1360	**S301_4.9 S2 M2SA2**	506	**S301_4.9 P80 BN80B2**	507
574	17.9	1.5	2.4	940	**S201_2.4 S2 M2SB4**	504	**S201_2.4 P90 BN90S4**	505
578	17.8	2.8	2.4	1340	**S301_2.4 S2 M2SB4**	506	**S301_2.4 P90 BN90S4**	507
587	17.5	1.2	4.8	950	**S201_4.8 S2 M2SA2**	504	**S201_4.8 P80 BN80B2**	505
654	15.7	2.2	1.4	1290	**S301_1.4 S3 M3SA6**	506	**S301_1.4 P90 BN90L6**	507
661	15.6	1.3	1.4	900	**S201_1.4 S3 M3SA6**	504	**S201_1.4 P90 BN90L6**	505
710	14.5	2.8	3.9	1280	**S301_3.9 S2 M2SA2**	506	**S301_3.9 P80 BN80B2**	507
712	14.5	1.5	3.9	910	**S201_3.9 S2 M2SA2**	504	**S201_3.9 P80 BN80B2**	505
739	13.9	1.2	1.9	890	**S201_1.9 S2 M2SB4**	504	**S201_1.9 P90 BN90S4**	505
767	13.4	2.2	1.8	1240	**S301_1.8 S2 M2SB4**	506	**S301_1.8 P90 BN90S4**	507
900	11.4	1.8	3.1	860	**S201_3.1 S2 M2SA2**	504	**S201_3.1 P80 BN80B2**	505
985	10.4	1.0	1.4	390	**S101_1.4 S2 M2SB4**	502	**S101_1.4 P90 BN90S4**	503
995	10.3	2.9	1.4	1150	**S301_1.4 S2 M2SB4**	506	**S301_1.4 P90 BN90S4**	507
1006	10.2	1.7	1.4	820	**S201_1.4 S2 M2SB4**	504	**S201_1.4 P90 BN90S4**	505
1149	9.0	2.3	2.4	810	**S201_2.4 S2 M2SA2**	504	**S201_2.4 P80 BN80B2**	505
1478	7.0	1.9	1.9	750	**S201_1.9 S2 M2SA2**	504	**S201_1.9 P80 BN80B2**	505
1493	6.9	1.2	1.9	380	**S101_1.9 S2 M2SA2**	502	**S101_1.9 P80 BN80B2**	503
1970	5.2	1.5	1.4	350	**S101_1.4 S2 M2SA2**	502	**S101_1.4 P80 BN80B2**	503

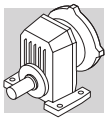

1.1 kW

n_2 min-1	M_2 Nm	S	i	R_{n2} N			IEC	
2013	5.1	2.5	1.4	690	**S201_1.4 S2 M2SA2**	504	**S201_1.4 P80 BN80B2**	505

1.5 kW

n_2 min-1	M_2 Nm	S	i	R_{n2} N			IEC	
88	117.0	1.0	10.5	5650	**S501_10.5 S3 M3SA6**	510	**S501_10.5 P90 BN90L6**	511
105	98.1	1.3	8.8	5380	**S501_8.8 S3 M3SA6**	510	**S501_8.8 P90 BN90L6**	511
109	94.8	1.1	12.9	5320	**S501_12.9 S3 M3SA4**	510	**S501_12.9 P90 BN90S4**	511
124	82.8	1.7	7.4	5120	**S501_7.4 S3 M3SA6**	510	**S501_7.4 P90 BN90L6**	511
129	80.1	1.1	7.2	3550	**S401_7.2 S3 M3SA6**	508	**S401_7.2 P90 BN90L6**	509
134	76.9	1.4	10.5	5020	**S501_10.5 S3 M3SA4**	510	**S501_10.5 P90 BN90S4**	511
152	67.9	1.5	6.1	3400	**S401_6.1 S3 M3SA6**	508	**S401_6.1 P90 BN90L6**	509
152	67.8	2.2	6.1	4840	**S501_6.1 S3 M3SA6**	510	**S501_6.1 P90 BN90L6**	511
160	64.5	1.7	8.8	4770	**S501_8.8 S3 M3SA4**	510	**S501_8.8 P90 BN90S4**	511
162	63.5	0.9	8.6	3350	**S401_8.6 S3 M3SA4**	508	**S401_8.6 P90 BN90S4**	509
186	55.2	1.1	4.9	1740	**S301_4.9 S3 M3SA6**	506	**S301_4.9 P90 BN90L6**	507
189	54.4	2.4	7.4	4530	**S501_7.4 S3 M3SA4**	510	**S501_7.4 P90 BN90S4**	511
190	54.1	1.9	4.8	3200	**S401_4.8 S3 M3SA6**	508	**S401_4.8 P90 BN90L6**	509
194	53.2	3.3	4.8	4500	**S501_4.8 S3 M3SA6**	510	**S501_4.8 P90 BN90L6**	511
196	52.6	1.5	7.2	3180	**S401_7.2 S3 M3SA4**	508	**S401_7.2 P90 BN90S4**	509
197	52.1	1.0	7.1	1730	**S301_7.1 S3 M3SA4**	506	**S301_7.1 P90 BN90S4**	507
217	47.4	1.7	12.9	4350	**S501_12.9 S2 M2SA2**	510	**S501_12.9 P80 BN80B2**	511
231	44.6	2.0	6.1	3040	**S401_6.1 S3 M3SA4**	508	**S401_6.1 P90 BN90S4**	509
231	44.5	2.9	6.1	4270	**S501_6.1 S3 M3SA4**	510	**S501_6.1 P90 BN90S4**	511
233	44.1	1.3	3.9	1670	**S301_3.9 S3 M3SA6**	506	**S301_3.9 P90 BN90L6**	507
239	43.0	1.2	5.8	1670	**S301_5.8 S3 M3SA4**	506	**S301_5.8 P90 BN90S4**	507
241	42.7	2.5	3.8	2990	**S401_3.8 S3 M3SA6**	508	**S401_3.8 P90 BN90L6**	509
263	39.2	1.0	10.7	2930	**S401_10.7 S2 M2SA2**	508	**S401_10.7 P80 BN80B2**	509
268	38.4	2.2	10.5	4090	**S501_10.5 S2 M2SA2**	510	**S501_10.5 P80 BN80B2**	511
284	36.3	1.4	4.9	1610	**S301_4.9 S3 M3SA4**	506	**S301_4.9 P90 BN90S4**	507
290	35.5	2.5	4.8	2850	**S401_4.8 S3 M3SA4**	508	**S401_4.8 P90 BN90S4**	509
300	34.3	1.7	3.1	1580	**S301_3.1 S3 M3SA6**	506	**S301_3.1 P90 BN90L6**	507
301	34.2	3.1	3.1	2810	**S401_3.1 S3 M3SA6**	508	**S401_3.1 P90 BN90L6**	509
319	32.2	2.6	8.8	3870	**S501_8.8 S2 M2SA2**	510	**S501_8.8 P80 BN80B2**	511
324	31.8	1.5	8.6	2760	**S401_8.6 S2 M2SA2**	508	**S401_8.6 P80 BN80B2**	509
355	29.0	1.7	3.9	1530	**S301_3.9 S3 M3SA4**	506	**S301_3.9 P90 BN90S4**	507
367	28.0	3.2	3.8	2650	**S401_3.8 S3 M3SA4**	508	**S401_3.8 P90 BN90S4**	509
377	27.3	1.1	2.4	1010	**S201_2.4 S3 M3SA6**	504	**S201_2.4 P90 BN90L6**	505
380	27.1	2.1	2.4	1490	**S301_2.4 S3 M3SA6**	506	**S301_2.4 P90 BN90L6**	507
391	26.3	2.4	7.2	2610	**S401_7.2 S2 M2SA2**	508	**S401_7.2 P80 BN80B2**	509
395	26.1	1.5	7.1	1500	**S301_7.1 S2 M2SA2**	506	**S301_7.1 P80 BN80B2**	507
450	22.9	1.1	3.1	990	**S201_3.1 S3 M3SA4**	504	**S201_3.1 P90 BN90S4**	505
457	22.5	2.2	3.1	1430	**S301_3.1 S3 M3SA4**	506	**S301_3.1 P90 BN90S4**	507
462	22.3	3.1	6.1	2490	**S401_6.1 S2 M2SA2**	508	**S401_6.1 P80 BN80B2**	509
479	21.5	1.9	5.8	1420	**S301_5.8 S2 M2SA2**	506	**S301_5.8 P80 BN80B2**	507
481	21.4	1.0	5.8	990	**S201_5.8 S2 M2SA2**	504	**S201_5.8 P80 BN80B2**	505
486	21.2	0.9	1.9	960	**S201_1.9 S3 M3SA6**	504	**S201_1.9 P90 BN90L6**	505
497	20.7	3.4	1.9	2420	**S401_1.9 S3 M3SA6**	508	**S401_1.9 P90 BN90L6**	509

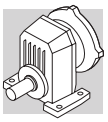

1.5 kW

n_2 min-1	M_2 Nm	S	i	R_{n2} N			IEC	
504	20.4	1.7	1.8	1380	**S301_1.8 S3 M3SA6**	506	**S301_1.8 P90 BN90L6**	507
568	18.1	2.2	4.9	1360	**S301_4.9 S2 M2SA2**	506	**S301_4.9 P80 BN80B2**	507
574	17.9	1.5	2.4	940	**S201_2.4 S3 M3SA4**	504	**S201_2.4 P90 BN90S4**	505
578	17.8	2.8	2.4	1340	**S301_2.4 S3 M3SA4**	506	**S301_2.4 P90 BN90S4**	507
587	17.5	1.2	4.8	950	**S201_4.8 S2 M2SA2**	504	**S201_4.8 P80 BN80B2**	505
654	15.7	2.2	1.4	1290	**S301_1.4 S3 M3SA6**	506	**S301_1.4 P90 BN90L6**	507
661	15.6	1.3	1.4	900	**S201_1.4 S3 M3SA6**	504	**S201_1.4 P90 BN90L6**	505
710	14.5	2.8	3.9	1280	**S301_3.9 S2 M2SA2**	506	**S301_3.9 P80 BN80B2**	507
712	14.5	1.5	3.9	910	**S201_3.9 S2 M2SA2**	504	**S201_3.9 P80 BN80B2**	505
739	13.9	1.2	1.9	890	**S201_1.9 S3 M3SA4**	504	**S201_1.9 P90 BN90S4**	505
767	13.4	2.2	1.8	1240	**S301_1.8 S3 M3SA4**	506	**S301_1.8 P90 BN90S4**	507
900	11.4	1.8	3.1	860	**S201_3.1 S2 M2SA2**	504	**S201_3.1 P80 BN80B2**	505
985	10.4	1.0	1.4	390	**S101_1.4 S3 M3SA4**	502	**S101_1.4 P90 BN90S4**	503
995	10.3	2.9	1.4	1150	**S301_1.4 S3 M3SA4**	506	**S301_1.4 P90 BN90S4**	507
1006	10.2	1.7	1.4	820	**S201_1.4 S3 M3SA4**	504	**S201_1.4 P90 BN90S4**	505
1149	9.0	2.3	2.4	810	**S201_2.4 S2 M2SA2**	504	**S201_2.4 P80 BN80B2**	505
1478	7.0	1.9	1.9	750	**S201_1.9 S2 M2SA2**	504	**S201_1.9 P80 BN80B2**	505
1493	6.9	1.2	1.9	380	**S101_1.9 S2 M2SA2**	502	**S101_1.9 P80 BN80B2**	503
1970	5.2	1.5	1.4	350	**S101_1.4 S2 M2SA2**	502	**S101_1.4 P80 BN80B2**	503
2013	5.1	2.5	1.4	690	**S201_1.4 S2 M2SA2**	504	**S201_1.4 P80 BN80B2**	505

2.2 kW

n_2 min-1	M_2 Nm	S	i	R_{n2} N			IEC	
154	134.1	1.1	6.1	4520	**S501_6.1 S3 M3LC6**	510	**S501_6.1 P112 BN112M6**	511
191	108.1	1.2	7.4	4280	**S501_7.4 S3 M3LA4**	510	**S501_7.4 P100 BN100LA4**	511
192	107.0	1.0	4.8	2880	**S401_4.8 S3 M3LC6**	508	**S401_4.8 P112 BN112M6**	509
196	105.2	1.7	4.8	4230	**S501_4.8 S3 M3LC6**	510	**S501_4.8 P112 BN112M6**	511
232	88.6	1.0	6.1	2790	**S401_6.1 S3 M3LA4**	508	**S401_6.1 P100 BN100LA4**	509
233	88.4	1.5	6.1	4060	**S501_6.1 S3 M3LA4**	510	**S501_6.1 P100 BN100LA4**	511
242	85.1	2.1	3.8	4000	**S501_3.8 S3 M3LC6**	510	**S501_3.8 P112 BN112M6**	511
244	84.4	1.2	3.8	2730	**S401_3.8 S3 M3LC6**	508	**S401_3.8 P112 BN112M6**	509
269	76.6	1.1	10.5	3910	**S501_10.5 S3 M3SA2**	510	**S501_10.5 P90 BN90L2**	511
292	70.6	1.3	4.8	2640	**S401_4.8 S3 M3LA4**	508	**S401_4.8 P100 BN100LA4**	509
297	69.4	2.2	4.8	3790	**S501_4.8 S3 M3LA4**	510	**S501_4.8 P100 BN100LA4**	511
305	67.6	1.6	3.1	2590	**S401_3.1 S3 M3LC6**	508	**S401_3.1 P112 BN112M6**	509
306	67.4	2.4	3.0	3750	**S501_3.0 S3 M3LC6**	510	**S501_3.0 P112 BN112M6**	511
320	64.3	1.3	8.8	3730	**S501_8.8 S3 M3SA2**	510	**S501_8.8 P90 BN90L2**	511
367	56.1	2.7	3.8	3570	**S501_3.8 S3 M3LA4**	510	**S501_3.8 P100 BN100LA4**	511
370	55.7	1.6	3.8	2490	**S401_3.8 S3 M3LA4**	508	**S401_3.8 P100 BN100LA4**	509
380	54.2	1.8	7.4	3540	**S501_7.4 S3 M3SA2**	510	**S501_7.4 P90 BN90L2**	511
384	53.6	1.1	2.4	1260	**S301_2.4 S3 M3LC6**	506	**S301_2.4 P112 BN112M6**	507
386	53.3	2.8	2.4	3500	**S501_2.4 S3 M3LC6**	510	**S501_2.4 P112 BN112M6**	511
389	52.9	2.0	2.4	2450	**S401_2.4 S3 M3LC6**	508	**S401_2.4 P112 BN112M6**	509
393	52.4	1.2	7.2	2460	**S401_7.2 S3 M3SA2**	508	**S401_7.2 P90 BN90L2**	509
460	44.7	1.1	3.1	1240	**S301_3.1 S3 M3LA4**	506	**S301_3.1 P100 BN100LA4**	507
462	44.6	2.0	3.1	2340	**S401_3.1 S3 M3LA4**	508	**S401_3.1 P100 BN100LA4**	509
463	44.5	1.6	6.1	2360	**S401_6.1 S3 M3SA2**	508	**S401_6.1 P90 BN90L2**	509

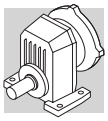

2.2 kW

n_2 min-1	M_2 Nm	S	i	R_{n2} N			IEC	
463	44.4	3.2	3.0	3340	**S501_3.0 S3 M3LA4**	510	**S501_3.0 P100 BN100LA4**	511
464	44.4	2.3	6.1	3340	**S501_6.1 S3 M3SA2**	510	**S501_6.1 P90 BN90L2**	511
481	42.8	0.9	5.8	1250	**S301_5.8 S3 M3SA2**	506	**S301_5.8 P90 BN90L2**	507
502	41.0	1.7	1.9	2280	**S401_1.9 S3 M3LC6**	508	**S401_1.9 P112 BN112M6**	509
520	39.6	3.2	1.8	3210	**S501_1.8 S3 M3LC6**	510	**S501_1.8 P112 BN112M6**	511
570	36.1	1.1	4.9	1220	**S301_4.9 S3 M3SA2**	506	**S301_4.9 P90 BN90L2**	507
581	35.4	2.0	4.8	2210	**S401_4.8 S3 M3SA2**	508	**S401_4.8 P90 BN90L2**	509
582	35.4	1.4	2.4	1190	**S301_2.4 S3 M3LA4**	506	**S301_2.4 P100 BN100LA4**	507
590	34.9	2.6	2.4	2200	**S401_2.4 S3 M3LA4**	508	**S401_2.4 P100 BN100LA4**	509
592	34.8	3.4	4.8	3110	**S501_4.8 S3 M3SA2**	510	**S501_4.8 P90 BN90L2**	511
661	31.2	1.1	1.4	1140	**S301_1.4 S3 M3LC6**	506	**S301_1.4 P112 BN112M6**	507
682	30.2	2.3	1.4	2090	**S401_1.4 S3 M3LC6**	508	**S401_1.4 P112 BN112M6**	509
712	28.9	1.4	3.9	1160	**S301_3.9 S3 M3SA2**	506	**S301_3.9 P90 BN90L2**	507
737	27.9	2.5	3.8	2070	**S401_3.8 S3 M3SA2**	508	**S401_3.8 P90 BN90L2**	509
761	27.0	2.2	1.9	2040	**S401_1.9 S3 M3LA4**	508	**S401_1.9 P100 BN100LA4**	509
772	26.7	1.1	1.8	1120	**S301_1.8 S3 M3LA4**	506	**S301_1.8 P100 BN100LA4**	507
903	22.8	0.9	3.1	730	**S201_3.1 S3 M3SA2**	504	**S201_3.1 P90 BN90L2**	505
918	22.4	1.8	3.1	1100	**S301_3.1 S3 M3SA2**	506	**S301_3.1 P90 BN90L2**	507
921	22.4	3.1	3.1	1940	**S401_3.1 S3 M3SA2**	508	**S401_3.1 P90 BN90L2**	509
1002	20.6	1.5	1.4	1050	**S301_1.4 S3 M3LA4**	506	**S301_1.4 P100 BN100LA4**	507
1034	19.9	3.0	1.4	1860	**S401_1.4 S3 M3LA4**	508	**S401_1.4 P100 BN100LA4**	509
1153	17.9	1.2	2.4	710	**S201_2.4 S3 M3SA2**	504	**S201_2.4 P90 BN90L2**	505
1161	17.7	2.3	2.4	1030	**S301_2.4 S3 M3SA2**	506	**S301_2.4 P90 BN90L2**	507
1483	13.9	0.9	1.9	670	**S201_1.9 S3 M3SA2**	504	**S201_1.9 P90 BN90L2**	505
1539	13.4	1.8	1.8	960	**S301_1.8 S3 M3SA2**	506	**S301_1.8 P90 BN90L2**	507
1997	10.3	2.3	1.4	890	**S301_1.4 S3 M3SA2**	506	**S301_1.4 P90 BN90L2**	507
2020	10.2	1.3	1.4	630	**S201_1.4 S3 M3SA2**	504	**S201_1.4 P90 BN90L2**	505

3.0 kW

n_2 min-1	M_2 Nm	S	i	R_{n2} N			IEC	
198	141.9	1.2	4.8	4040	**S501_4.8 S4 M4SA6**	510	**S501_4.8 P132 BN132S6**	511
233	120.6	1.1	6.1	3910	**S501_6.1 S3 M3LB4**	510	**S501_6.1 P100 BN100LB4**	511
245	114.8	1.5	3.8	3840	**S501_3.8 S4 M4SA6**	510	**S501_3.8 P132 BN132S6**	511
247	113.9	0.9	3.8	2550	**S401_3.8 S4 M4SA6**	508	**S401_3.8 P132 BN132S6**	509
292	96.2	0.9	4.8	2490	**S401_4.8 S3 M3LB4**	508	**S401_4.8 P100 BN100LB4**	509
297	94.6	1.6	4.8	3670	**S501_4.8 S3 M3LB4**	510	**S501_4.8 P100 BN100LB4**	511
308	91.2	1.2	3.1	2440	**S401_3.1 S4 M4SA6**	508	**S401_3.1 P132 BN132S6**	509
309	90.9	1.8	3.0	3630	**S501_3.0 S4 M4SA6**	510	**S501_3.0 P132 BN132S6**	511
326	86.1	1.0	8.8	3600	**S501_8.8 S3 M3LA2**	510	**S501_8.8 P100 BN100L2**	511
367	76.5	2.0	3.8	3470	**S501_3.8 S3 M3LB4**	510	**S501_3.8 P100 BN100LB4**	511
370	75.9	1.2	3.8	2370	**S401_3.8 S3 M3LB4**	508	**S401_3.8 P100 BN100LB4**	509
386	72.6	1.4	7.4	3440	**S501_7.4 S3 M3LA2**	510	**S501_7.4 P100 BN100L2**	511
390	71.9	2.1	2.4	3390	**S501_2.4 S4 M4SA6**	510	**S501_2.4 P132 BN132S6**	511
393	71.4	1.5	2.4	2320	**S401_2.4 S4 M4SA6**	508	**S401_2.4 P132 BN132S6**	509
462	60.8	1.5	3.1	2250	**S401_3.1 S3 M3LB4**	508	**S401_3.1 P100 BN100LB4**	509
463	60.6	2.3	3.0	3260	**S501_3.0 S3 M3LB4**	510	**S501_3.0 P100 BN100LB4**	511
471	59.6	1.2	6.1	2260	**S401_6.1 S3 M3LA2**	508	**S401_6.1 P100 BN100L2**	509

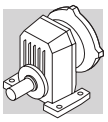

3.0 kW

n_2 min-1	M_2 Nm	S	i	R_{n2} N			IEC	
472	59.4	1.7	6.1	3260	**S501_6.1 S3 M3LA2**	510	**S501_6.1 P100 BN100L2**	511
508	55.3	1.3	1.9	2170	**S401_1.9 S4 M4SA6**	508	**S401_1.9 P132 BN132S6**	509
526	53.4	2.3	1.8	3120	**S501_1.8 S4 M4SA6**	510	**S501_1.8 P132 BN132S6**	511
582	48.2	1.0	2.4	1080	**S301_2.4 S3 M3LB4**	506	**S301_2.4 P100 BN100LB4**	507
586	47.9	2.7	2.4	3040	**S501_2.4 S3 M3LB4**	510	**S501_2.4 P100 BN100LB4**	511
590	47.6	1.9	2.4	2120	**S401_2.4 S3 M3LB4**	508	**S401_2.4 P100 BN100LB4**	509
592	47.4	1.5	4.8	2130	**S401_4.8 S3 M3LA2**	508	**S401_4.8 P100 BN100L2**	509
602	46.6	2.6	4.8	3030	**S501_4.8 S3 M3LA2**	510	**S501_4.8 P100 BN100L2**	511
661	42.4	2.9	1.4	2920	**S501_1.4 S4 M4SA6**	510	**S501_1.4 P132 BN132S6**	511
689	40.7	1.7	1.4	2010	**S401_1.4 S4 M4SA6**	508	**S401_1.4 P132 BN132S6**	509
725	38.7	1.0	3.9	1070	**S301_3.9 S3 M3LA2**	506	**S301_3.9 P100 BN100L2**	507
744	37.7	3.2	3.8	2850	**S501_3.8 S3 M3LA2**	510	**S501_3.8 P100 BN100L2**	511
750	37.4	1.9	3.8	2000	**S401_3.8 S3 M3LA2**	508	**S401_3.8 P100 BN100L2**	509
761	36.9	1.6	1.9	1970	**S401_1.9 S3 M3LB4**	508	**S401_1.9 P100 BN100LB4**	509
789	35.6	3.1	1.8	2780	**S501_1.8 S3 M3LB4**	510	**S501_1.8 P100 BN100LB4**	511
934	30.1	1.3	3.1	1020	**S301_3.1 S3 M3LA2**	506	**S301_3.1 P100 BN100L2**	507
937	30.0	2.3	3.1	1880	**S401_3.1 S3 M3LA2**	508	**S401_3.1 P100 BN100L2**	509
1002	28.0	1.1	1.4	980	**S301_1.4 S3 M3LB4**	506	**S301_1.4 P100 BN100LB4**	507
1034	27.2	2.2	1.4	1820	**S401_1.4 S3 M3LB4**	508	**S401_1.4 P100 BN100LB4**	509
1181	23.8	1.7	2.4	980	**S301_2.4 S3 M3LA2**	506	**S301_2.4 P100 BN100L2**	507
1196	23.5	3.0	2.4	1760	**S401_2.4 S3 M3LA2**	508	**S401_2.4 P100 BN100L2**	509
1544	18.2	2.6	1.9	1630	**S401_1.9 S3 M3LA2**	508	**S401_1.9 P100 BN100L2**	509
1566	17.9	1.3	1.8	910	**S301_1.8 S3 M3LA2**	506	**S301_1.8 P100 BN100L2**	507
2032	13.8	1.7	1.4	850	**S301_1.4 S3 M3LA2**	506	**S301_1.4 P100 BN100L2**	507
2056	13.7	1.0	1.4	580	**S201_1.4 S3 M3LA2**	504	**S201_1.4 P100 BN100L2**	505

4.0 kW

n_2 min-1	M_2 Nm	S	i	R_{n2} N			IEC	
200	187.2	0.9	4.8	3810	**S501_4.8 S4 M4LA6**	510	**S501_4.8 P132 BN132MA6**	511
247	151.4	1.2	3.8	3650	**S501_3.8 S4 M4LA6**	510	**S501_3.8 P132 BN132MA6**	511
293	127.9	1.2	4.8	3530	**S501_4.8 S3 M3LC4**	510	**S501_4.8 P112 BN112M4**	511
312	119.9	1.3	3.0	3470	**S501_3.0 S4 M4LA6**	510	**S501_3.0 P132 BN132MA6**	511
362	103.5	1.4	3.8	3360	**S501_3.8 S3 M3LC4**	510	**S501_3.8 P112 BN112M4**	511
388	96.5	1.0	7.4	3320	**S501_7.4 S3 M3LB2**	510	**S501_7.4 P112 BN112M2**	511
395	94.9	1.6	2.4	3270	**S501_2.4 S4 M4LA6**	510	**S501_2.4 P132 BN132MA6**	511
397	94.2	1.1	2.4	2180	**S401_2.4 S4 M4LA6**	508	**S401_2.4 P132 BN132MA6**	509
455	82.2	1.1	3.1	2130	**S401_3.1 S3 M3LC4**	508	**S401_3.1 P112 BN112M4**	509
457	82.0	1.7	3.0	3170	**S501_3.0 S3 M3LC4**	510	**S501_3.0 P112 BN112M4**	511
474	79.0	1.3	6.1	3160	**S501_6.1 S3 M3LB2**	510	**S501_6.1 P112 BN112M2**	511
513	73.0	1.0	1.9	2050	**S401_1.9 S4 M4LA6**	508	**S401_1.9 P132 BN132MA6**	509
531	70.5	1.8	1.8	3020	**S501_1.8 S4 M4LA6**	510	**S501_1.8 P132 BN132MA6**	511
577	64.8	2.0	2.4	2970	**S501_2.4 S3 M3LC4**	510	**S501_2.4 P112 BN112M4**	511
581	64.4	1.4	2.4	2030	**S401_2.4 S3 M3LC4**	508	**S401_2.4 P112 BN112M4**	509
594	63.0	1.1	4.8	2040	**S401_4.8 S3 M3LB2**	508	**S401_4.8 P112 BN112M2**	509
604	62.0	1.9	4.8	2960	**S501_4.8 S3 M3LB2**	510	**S501_4.8 P112 BN112M2**	511
669	56.0	2.2	1.4	2830	**S501_1.4 S4 M4LA6**	510	**S501_1.4 P132 BN132MA6**	511
697	53.7	1.3	1.4	1920	**S401_1.4 S4 M4LA6**	508	**S401_1.4 P132 BN132MA6**	509

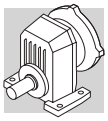

4.0 kW

n_2 min^{-1}	M_2 Nm	S	i	R_{n2} N			IEC	
747	50.1	2.4	3.8	2790	**S501_3.8 S3 M3LB2**	510	**S501_3.8 P112 BN112M2**	511
751	49.9	1.2	1.9	1900	**S401_1.9 S3 M3LC4**	508	**S401_1.9 P112 BN112M4**	509
753	49.7	1.4	3.8	1930	**S401_3.8 S3 M3LB2**	508	**S401_3.8 P112 BN112M2**	509
777	48.2	2.3	1.8	2730	**S501_1.8 S3 M3LC4**	510	**S501_1.8 P112 BN112M4**	511
937	39.9	1.0	3.1	940	**S301_3.1 S3 M3LB2**	506	**S301_3.1 P112 BN112M2**	507
940	39.8	1.8	3.1	1820	**S401_3.1 S3 M3LB2**	508	**S401_3.1 P112 BN112M2**	509
943	39.7	2.8	3.0	2610	**S501_3.0 S3 M3LB2**	510	**S501_3.0 P112 BN112M2**	511
978	38.3	2.9	1.4	2560	**S501_1.4 S3 M3LC4**	510	**S501_1.4 P112 BN112M4**	511
1019	36.7	1.6	1.4	1760	**S401_1.4 S3 M3LC4**	508	**S401_1.4 P112 BN112M4**	509
1185	31.6	1.3	2.4	910	**S301_2.4 S3 M3LB2**	506	**S301_2.4 P112 BN112M2**	507
1192	31.4	3.2	2.4	2430	**S501_2.4 S3 M3LB2**	510	**S501_2.4 P112 BN112M2**	511
1200	31.2	2.2	2.4	1710	**S401_2.4 S3 M3LB2**	508	**S401_2.4 P112 BN112M2**	509
1550	24.2	2.0	1.9	1590	**S401_1.9 S3 M3LB2**	508	**S401_1.9 P112 BN112M2**	509
1572	23.8	1.0	1.8	860	**S301_1.8 S3 M3LB2**	506	**S301_1.8 P112 BN112M2**	507
2039	18.4	1.3	1.4	810	**S301_1.4 S3 M3LB2**	506	**S301_1.4 P112 BN112M2**	507
2105	17.8	2.7	1.4	1460	**S401_1.4 S3 M3LB2**	508	**S401_1.4 P112 BN112M2**	509

5.5 kW

n_2 min^{-1}	M_2 Nm	S	i	R_{n2} N			IEC	
311	165.8	1.0	3.0	3260	**S501_3.0 S4 M4LB6**	510	**S501_3.0 P132 BN132MB6**	511
375	137.3	1.1	3.8	3150	**S501_3.8 S4 M4SA4**	510	**S501_3.8 P132 BN132S4**	511
393	131.1	1.1	2.4	3090	**S501_2.4 S4 M4LB6**	510	**S501_2.4 P132 BN132MB6**	511
473	108.8	1.3	3.0	3000	**S501_3.0 S4 M4SA4**	510	**S501_3.0 P132 BN132S4**	511
477	107.9	0.9	6.1	3020	**S501_6.1 S4 M4SA2**	510	**S501_6.1 P132 BN132SA2**	511
529	97.4	1.3	1.8	2880	**S501_1.8 S4 M4LB6**	510	**S501_1.8 P132 BN132MB6**	511
598	86.1	1.5	2.4	2830	**S501_2.4 S4 M4SA4**	510	**S501_2.4 P132 BN132S4**	511
602	85.5	1.1	2.4	1870	**S401_2.4 S4 M4SA4**	508	**S401_2.4 P132 BN132S4**	509
608	84.6	1.4	4.8	2840	**S501_4.8 S4 M4SA2**	510	**S501_4.8 P132 BN132SA2**	511
665	77.4	1.6	1.4	2720	**S501_1.4 S4 M4LB6**	510	**S501_1.4 P132 BN132MB6**	511
693	74.3	0.9	1.4	1780	**S401_1.4 S4 M4LB6**	508	**S401_1.4 P132 BN132MB6**	509
752	68.4	1.8	3.8	2690	**S501_3.8 S4 M4SA2**	510	**S501_3.8 P132 BN132SA2**	511
758	67.9	1.0	3.8	1810	**S401_3.8 S4 M4SA2**	508	**S401_3.8 P132 BN132SA2**	509
778	66.2	0.9	1.9	1770	**S401_1.9 S4 M4SA4**	508	**S401_1.9 P132 BN132S4**	509
805	63.9	1.7	1.8	2610	**S501_1.8 S4 M4SA4**	510	**S501_1.8 P132 BN132S4**	511
947	54.4	1.3	3.1	1730	**S401_3.1 S4 M4SA2**	508	**S401_3.1 P132 BN132SA2**	509
950	54.2	2.0	3.0	2530	**S501_3.0 S4 M4SA2**	510	**S501_3.0 P132 BN132SA2**	511
1013	50.8	2.2	1.4	2450	**S501_1.4 S4 M4SA4**	510	**S501_1.4 P132 BN132S4**	511
1056	48.7	1.2	1.4	1660	**S401_1.4 S4 M4SA4**	508	**S401_1.4 P132 BN132S4**	509
1200	42.9	2.3	2.4	2370	**S501_2.4 S4 M4SA2**	510	**S501_2.4 P132 BN132SA2**	511
1209	42.6	1.6	2.4	1640	**S401_2.4 S4 M4SA2**	508	**S401_2.4 P132 BN132SA2**	509
1561	33.0	1.5	1.9	1530	**S401_1.9 S4 M4SA2**	508	**S401_1.9 P132 BN132SA2**	509
1616	31.8	2.7	1.8	2170	**S501_1.8 S4 M4SA2**	510	**S501_1.8 P132 BN132SA2**	511
2034	25.3	3.4	1.4	2030	**S501_1.4 S4 M4SA2**	510	**S501_1.4 P132 BN132SA2**	511
2119	24.3	2.0	1.4	1410	**S401_1.4 S4 M4SA2**	508	**S401_1.4 P132 BN132SA2**	509

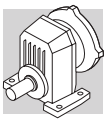

7.5 kW

n_2 min^{-1}	M_2 Nm	S	i	R_{n2} N			IEC	
473	148.4	0.9	3.0	2810	**S501_3.0 S4 M4LA4**	510	**S501_3.0 P132 BN132MA4**	511
534	131.4	1.0	1.8	2690			**S501_1.8 P160 BN160M6**	511
598	117.3	1.1	2.4	2670	**S501_2.4 S4 M4LA4**	510	**S501_2.4 P132 BN132MA4**	511
611	115.0	1.0	4.8	2690	**S501_4.8 S4 M4SB2**	510	**S501_4.8 P132 BN132SB2**	511
672	104.4	1.2	1.4	2560			**S501_1.4 P160 BN160M6**	511
755	93.0	1.3	3.8	2570	**S501_3.8 S4 M4SB2**	510	**S501_3.8 P132 BN132SB2**	511
805	87.1	1.3	1.8	2490	**S501_1.8 S4 M4LA4**	510	**S501_1.8 P132 BN132MA4**	511
950	73.9	0.9	3.1	1610	**S401_3.1 S4 M4SB2**	508	**S401_3.1 P132 BN132SB2**	509
953	73.7	1.5	3.0	2440	**S501_3.0 S4 M4SB2**	510	**S501_3.0 P132 BN132SB2**	511
1013	69.3	1.6	1.4	2350	**S501_1.4 S4 M4LA4**	510	**S501_1.4 P132 BN132MA4**	511
1056	66.5	0.9	1.4	1540	**S401_1.4 S4 M4LA4**	508	**S401_1.4 P132 BN132MA4**	509
1205	58.3	1.7	2.4	2290	**S501_2.4 S4 M4SB2**	510	**S501_2.4 P132 BN132SB2**	511
1213	57.9	1.2	2.4	1540	**S401_2.4 S4 M4SB2**	508	**S401_2.4 P132 BN132SB2**	509
1566	44.8	1.1	1.9	1450	**S401_1.9 S4 M4SB2**	508	**S401_1.9 P132 BN132SB2**	509
1622	43.3	2.0	1.8	2110	**S501_1.8 S4 M4SB2**	510	**S501_1.8 P132 BN132SB2**	511
2041	34.4	2.5	1.4	1980	**S501_1.4 S4 M4SB2**	510	**S501_1.4 P132 BN132SB2**	511
2127	33.0	1.5	1.4	1350	**S401_1.4 S4 M4SB2**	508	**S401_1.4 P132 BN132SB2**	509

9.2 kW

n_2 min^{-1}	M_2 Nm	S	i	R_{n2} N			IEC	
598	143.9	0.9	2.4	2530	**S501_2.4 S4 M4LB4**	510	**S501_2.4 P132 BN132MB4**	511
755	114.1	1.1	3.8	2470	**S501_3.8 S4 M4LA2**	510	**S501_3.8 P132 BN132M2**	511
805	106.9	1.0	1.8	2390	**S501_1.8 S4 M4LB4**	510	**S501_1.8 P132 BN132MB4**	511
953	90.4	1.2	3.0	2360	**S501_3.0 S4 M4LA2**	510	**S501_3.0 P132 BN132M2**	511
1013	85.0	1.3	1.4	2270	**S501_1.4 S4 M4LB4**	510	**S501_1.4 P132 BN132MB4**	511
1205	71.5	1.4	2.4	2220	**S501_2.4 S4 M4LA2**	510	**S501_2.4 P132 BN132M2**	511
1213	71.0	1.0	2.4	1460	**S401_2.4 S4 M4LA2**	508	**S401_2.4 P132 BN132M2**	509
1622	53.1	1.6	1.8	2060	**S501_1.8 S4 M4LA2**	510	**S501_1.8 P132 BN132M2**	511
2041	42.2	2.0	1.4	1930	**S501_1.4 S4 M4LA2**	510	**S501_1.4 P132 BN132M2**	511
2127	40.5	1.2	1.4	1300	**S401_1.4 S4 M4LA2**	508	**S401_1.4 P132 BN132M2**	509

S 10 — 21 Nm

	i	n_1 = 2800 min^{-1}					n_1 = 1400 min^{-1}					
		n_2 min^{-1}	M_{n2} Nm	P_{n1} kW	R_{n1} N	R_{n2} N	n_2 min^{-1}	M_{n2} Nm	P_{n1} kW	R_{n1} N	R_{n2} N	
S 10 1_1.4	1.4	1972	8.0	1.7	800	310	986	10.0	1.1	800	390	503
S 10 1_1.9	1.9	1489	8.0	1.3	800	360	745	10.0	0.80	800	460	
S 10 1_2.5	2.5	1120	8.0	0.96	800	420	560	10.0	0.60	800	520	
S 10 1_3.2	3.2	875	10.0	0.93	800	440	438	12.0	0.56	800	560	
S 10 1_3.8	3.8	727	10.0	0.78	800	480	364	12.0	0.47	800	610	
S 10 1_4.7	4.7	592	10.0	0.63	800	520	296	12.0	0.38	800	660	
S 10 1_6.1	6.1	458	12.0	0.59	800	560	229	15.0	0.37	800	710	
S 10 1_6.9	6.9	406	12.0	0.52	800	580	203	15.0	0.33	800	740	
S 10 1_8.9	8.9	315	8.0	0.27	800	700	158	10.0	0.17	800	880	
S 10 1_10.3	10.3	272	8.0	0.23	800	740	136	10.0	0.15	800	930	
S 10 1_12.3	12.3	227	8.0	0.19	800	800	114	10.0	0.12	800	1000	

	i	n_1 = 900 min^{-1}					n_1 = 500 min^{-1}					
		n_2 min^{-1}	M_{n2} Nm	P_{n1} kW	R_{n1} N	R_{n2} N	n_2 min^{-1}	M_{n2} Nm	P_{n1} kW	R_{n1} N	R_{n2} N	
S 10 1_1.4	1.4	634	12.0	0.81	800	450	352	14.0	0.53	800	560	503
S 10 1_1.9	1.9	479	12.0	0.61	800	520	266	14.0	0.40	800	640	
S 10 1_2.5	2.5	360	12.0	0.46	800	600	200	14.0	0.30	800	740	
S 10 1_3.2	3.2	281	14.0	0.42	800	650	156	17.0	0.28	800	790	
S 10 1_3.8	3.8	234	14.0	0.35	800	700	130	17.0	0.24	800	850	
S 10 1_4.7	4.7	190	14.0	0.28	800	770	106	17.0	0.19	800	930	
S 10 1_6.1	6.1	147	17.0	0.27	800	820	82	21	0.18	800	1000	
S 10 1_6.9	6.9	130	17.0	0.24	800	860	72	21	0.16	800	1040	
S 10 1_8.9	8.9	101	12.0	0.13	800	1020	56	14.0	0.08	800	1200	
S 10 1_10.3	10.3	87	12.0	0.11	800	1080	49	14.0	0.07	800	1200	
S 10 1_12.3	12.3	73	12.0	0.09	800	1160	41	14.0	0.06	800	1200	

Bonfiglioli Riduttori

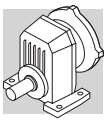

S 20 — 37 Nm

	i	n_1 = 2800 min^{-1}					n_1 = 1400 min^{-1}					
		n_2 min^{-1}	M_{n2} Nm	P_{n1} kW	R_{n1} N	R_{n2} N	n_2 min^{-1}	M_{n2} Nm	P_{n1} kW	R_{n1} N	R_{n2} N	
S 20 1_1.4	1.4	2014	13.0	2.8	1000	590	1007	17.0	1.8	1000	740	505
S 20 1_1.9	1.9	1481	13.0	2.1	1000	680	741	17.0	1.3	1000	860	
S 20 1_2.4	2.4	1148	21	2.6	640	680	574	26	1.6	850	860	
S 20 1_3.1	3.1	900	21	2.0	730	750	450	26	1.3	960	950	
S 20 1_3.9	3.9	712	21	1.6	820	840	356	26	0.99	1000	1060	
S 20 1_4.8	4.8	587	21	1.3	910	920	294	26	0.82	1000	1160	
S 20 1_5.8	5.8	481	21	1.1	960	1000	241	26	0.67	1000	1260	
S 20 1_7.2	7.2	388	21	0.87	980	1090	194	26	0.54	1000	1370	
S 20 1_8.5	8.5	329	13.0	0.46	1000	1240	165	17.0	0.30	1000	1500	
S 20 1_10.8	10.8	260	13.0	0.36	1000	1350	130	17.0	0.24	1000	1500	
S 20 1_12.4	12.4	225	13.0	0.31	1000	1430	113	17.0	0.20	1000	1500	

	i	n_1 = 900 min^{-1}					n_1 = 500 min^{-1}					
		n_2 min^{-1}	M_{n2} Nm	P_{n1} kW	R_{n1} N	R_{n2} N	n_2 min^{-1}	M_{n2} Nm	P_{n1} kW	R_{n1} N	R_{n2} N	
S 20 1_1.4	1.4	647	20	1.4	1000	850	360	24	0.92	1000	1040	505
S 20 1_1.9	1.9	476	20	1.0	1000	990	265	24	0.68	1000	1210	
S 20 1_2.4	2.4	369	30	1.2	990	990	205	37	0.81	1000	1200	
S 20 1_3.1	3.1	289	30	0.93	1000	1110	161	37	0.64	1000	1340	
S 20 1_3.9	3.9	229	30	0.73	1000	1230	127	37	0.50	1000	1490	
S 20 1_4.8	4.8	189	30	0.60	1000	1350	105	37	0.41	1000	1500	
S 20 1_5.8	5.8	155	30	0.50	1000	1460	86	37	0.34	1000	1500	
S 20 1_7.2	7.2	125	30	0.40	1000	1500	69	37	0.27	1000	1500	
S 20 1_8.5	8.5	106	20	0.23	1000	1500	59	24	0.15	1000	1500	
S 20 1_10.8	10.8	84	20	0.18	1000	1500	47	24	0.12	1000	1500	
S 20 1_12.4	12.4	72	20	0.15	1000	1500	40	24	0.10	1000	1500	

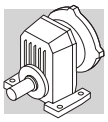

S 30 — 70 Nm

	i	n_1 = 2800 min^{-1}					n_1 = 1400 min^{-1}					
		n_2 min^{-1}	M_{n2} Nm	P_{n1} kW	R_{n1} N	R_{n2} N	n_2 min^{-1}	M_{n2} Nm	P_{n1} kW	R_{n1} N	R_{n2} N	
S 30 1_1.4	1.4	1986	24	5.1	1500	770	993	30	3.2	1500	970	507
S 30 1_1.8	1.8	1530	24	3.9	1500	870	765	30	2.5	1500	1090	
S 30 1_2.4	2.4	1157	40	4.9	1270	850	579	50	3.1	1500	1070	
S 30 1_3.1	3.1	915	40	3.9	1470	950	458	50	2.4	1500	1200	
S 30 1_3.9	3.9	711	40	3.0	1500	1070	355	50	1.9	1500	1360	
S 30 1_4.9	4.9	568	40	2.4	1500	1190	284	50	1.5	1500	1500	
S 30 1_5.8	5.8	479	40	2.0	1500	1280	239	50	1.3	1500	1610	
S 30 1_7.1	7.1	395	40	1.7	1500	1390	197	50	1.1	1500	1750	
S 30 1_8.9	8.9	315	24	0.81	1500	1650	157	30	0.50	1500	2080	
S 30 1_10.3	10.3	272	24	0.70	1500	1740	136	30	0.44	1500	2190	
S 30 1_13.1	13.1	213	24	0.55	1500	1900	107	30	0.34	1500	2400	

	i	n_1 = 900 min^{-1}					n_1 = 500 min^{-1}					
		n_2 min^{-1}	M_{n2} Nm	P_{n1} kW	R_{n1} N	R_{n2} N	n_2 min^{-1}	M_{n2} Nm	P_{n1} kW	R_{n1} N	R_{n2} N	
S 30 1_1.4	1.4	638	35	2.4	1500	1120	355	42	1.6	1500	1360	507
S 30 1_1.8	1.8	492	35	1.8	1500	1260	273	42	1.2	1500	1540	
S 30 1_2.4	2.4	372	58	2.3	1500	1240	207	70	1.5	1500	1510	
S 30 1_3.1	3.1	294	58	1.8	1500	1390	163	70	1.2	1500	1700	
S 30 1_3.9	3.9	228	58	1.4	1500	1570	127	70	0.95	1500	1920	
S 30 1_4.9	4.9	183	58	1.1	1500	1740	101	70	0.76	1500	2120	
S 30 1_5.8	5.8	154	58	0.95	1500	1870	85	70	0.64	1500	2280	
S 30 1_7.1	7.1	127	58	0.79	1500	2030	71	62	0.47	1500	2400	
S 30 1_8.9	8.9	101	35	0.38	1500	2400	56	42	0.25	1500	2400	
S 30 1_10.3	10.3	87	35	0.33	1500	2400	49	42	0.22	1500	2400	
S 30 1_13.1	13.1	69	35	0.26	1500	2400	38	37	0.15	1500	2400	

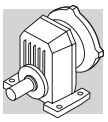

S 40 — 125 Nm

	i	n_1 = 2800 min^{-1}					n_1 = 1400 min^{-1}					
		n_2 min^{-1}	M_{n2} Nm	P_{n1} kW	R_{n1} N	R_{n2} N	n_2 min^{-1}	M_{n2} Nm	P_{n1} kW	R_{n1} N	R_{n2} N	
S 40 1_1.4	1.4	2059	48	10.6	2000	1270	1029	60	6.6	2000	1600	509
S 40 1_1.9	1.9	1514	48	7.8	2000	1450	757	60	4.9	2000	1830	
S 40 1_2.4	2.4	1172	70	8.8	1860	1490	586	90	5.6	2000	1870	
S 40 1_3.1	3.1	918	70	6.9	2000	1660	459	90	4.4	2000	2080	
S 40 1_3.8	3.8	735	70	5.5	2000	1830	367	90	3.5	2000	2290	
S 40 1_4.8	4.8	580	70	4.3	2000	2020	290	90	2.8	2000	2530	
S 40 1_6.1	6.1	461	70	3.5	2000	2220	231	90	2.2	2000	2790	
S 40 1_7.2	7.2	392	63	2.6	2000	2410	196	80	1.7	2000	3030	
S 40 1_8.6	8.6	324	48	1.7	2000	2670	162	60	1.0	2000	3370	
S 40 1_10.7	10.7	262	40	1.1	2000	2930	131	50	0.70	2000	3690	
S 40 1_12.4	12.4	226	40	1.0	2000	3100	113	50	0.60	2000	3800	

	i	n_1 = 900 min^{-1}					n_1 = 500 min^{-1}					
		n_2 min^{-1}	M_{n2} Nm	P_{n1} kW	R_{n1} N	R_{n2} N	n_2 min^{-1}	M_{n2} Nm	P_{n1} kW	R_{n1} N	R_{n2} N	
S 40 1_1.4	1.4	662	70	4.9	2000	1850	368	85	3.3	2000	2250	509
S 40 1_1.9	1.9	486	70	3.6	2000	2120	270	85	2.5	2000	2580	
S 40 1_2.4	2.4	377	105	4.2	2000	2160	209	125	2.8	2000	2650	
S 40 1_3.1	3.1	295	105	3.3	2000	2400	164	125	2.2	2000	2940	
S 40 1_3.8	3.8	236	105	2.7	2000	2650	131	125	1.8	2000	3240	
S 40 1_4.8	4.8	186	105	2.1	2000	2930	104	125	1.4	2000	3580	
S 40 1_6.1	6.1	148	105	1.7	2000	3220	82	110	1.0	2000	3800	
S 40 1_7.2	7.2	126	90	1.2	2000	3530	70	90	0.67	2000	3800	
S 40 1_8.6	8.6	104	70	0.78	2000	3800	58	85	0.53	2000	3800	
S 40 1_10.7	10.7	84	58	0.52	2000	3800	47	70	0.35	2000	3800	
S 40 1_12.4	12.4	73	58	0.45	2000	3800	40	70	0.30	2000	3800	

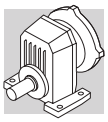

S 50 — 200 Nm

	i	n_1 = 2800 min^{-1}					n_1 = 1400 min^{-1}					
		n_2 min^{-1}	M_{n2} Nm	P_{n1} kW	R_{n1} N	R_{n2} N	n_2 min^{-1}	M_{n2} Nm	P_{n1} kW	R_{n1} N	R_{n2} N	
S 50 1_1.4	1.4	1972	85	17.9	730	1720	986	110	11.6	730	2150	511
S 50 1_1.8	1.8	1564	85	14.2	1220	1920	782	110	9.2	1370	2400	
S 50 1_2.4	2.4	1162	100	12.4	930	2110	581	130	8.1	970	2640	
S 50 1_3.0	3.0	921	110	10.8	860	2300	461	140	6.9	1020	2880	
S 50 1_3.8	3.8	729	120	9.3	640	2480	365	150	5.8	860	3130	
S 50 1_4.8	4.8	589	120	7.6	880	2710	295	150	4.7	1160	3420	
S 50 1_6.1	6.1	462	100	4.9	1980	3100	231	130	3.2	2330	3880	
S 50 1_7.4	7.4	378	100	4.0	2060	3340	189	130	2.6	2400	4190	
S 50 1_8.8	8.8	319	85	2.9	2400	3640	160	110	1.9	2400	4570	
S 50 1_10.5	10.5	268	85	2.4	2400	3880	134	110	1.6	2400	4870	
S 50 1_12.9	12.9	217	80	1.9	2400	4200	109	100	1.2	2400	5300	

	i	n_1 = 900 min^{-1}					n_1 = 500 min^{-1}					
		n_2 min^{-1}	M_{n2} Nm	P_{n1} kW	R_{n1} N	R_{n2} N	n_2 min^{-1}	M_{n2} Nm	P_{n1} kW	R_{n1} N	R_{n2} N	
S 50 1_1.4	1.4	634	125	8.5	1010	2510	352	155	5.8	1040	3040	511
S 50 1_1.8	1.8	503	125	6.7	1730	2790	279	155	4.6	1940	3380	
S 50 1_2.4	2.4	373	150	6.0	1160	3060	207	180	4.0	1530	3730	
S 50 1_3.0	3.0	296	160	5.1	1290	3350	164	200	3.5	1310	4050	
S 50 1_3.8	3.8	234	175	4.4	940	3620	130	200	2.8	1740	4460	
S 50 1_4.8	4.8	189	175	3.5	1290	3960	105	180	2.0	2400	4970	
S 50 1_6.1	6.1	149	150	2.4	2400	4500	83	150	1.3	2400	5620	
S 50 1_7.4	7.4	122	140	1.8	2400	4900	68	140	1.0	2400	6100	
S 50 1_8.8	8.8	103	125	1.4	2400	5310	57	125	0.80	2400	6580	
S 50 1_10.5	10.5	86	115	1.1	2400	5700	48	115	0.60	2400	7050	
S 50 1_12.9	12.9	70	100	0.70	2400	6210	39	100	0.40	2400	7200	

75 MOTOR AVAILABILITY

Please be aware that motor-gearbox combinations resulting from the following charts are purely based on geometrical compatibility.

When selecting a gearmotor, refer to procedure specified at paragraph 12 and observe particularly the condition $S \geq f_s$.

(E 69)

		IEC_ BN (IM B5)								
		BN								
P_{n1}(#) [kW]	2p	0.37	0.75	1.5	2.2	4	4	9.2	18.5	22
	4p	0.25	0.55	1.1	1.85	3	4	9.2	15	22
	6p	0.12	0.37	0.75	1.1	1.85	2.2	5.5	11	15
		P63	P71	P80	P90	P100	P112	P132	P160	P180
S 10 1	i =	1.4_12.3	1.4_12.3	1.4_8.9	1.4_8.9	1.4_8.9	1.4_8.9			
S 20 1		1.9_12.4	1.9_12.4	1.4_10.8	1.4_10.8	1.4_10.8	1.4_10.8			
S 30 1		2.4_13.1	2.4_13.1	1.4_13.1	1.4_13.1	1.4_13.1	1.4_13.1	1.4_4.9		
S 40 1		3.1_12.4	3.1_12.4	1.4_12.4	1.4_12.4	1.4_12.4	1.4_12.4	1.4_6.1		
S 50 1		3.8_12.9	3.8_12.9	1.4_12.9	1.4_12.9	1.4_12.9	1.4_12.9	1.4_7.4	1.4_7.4	1.4_7.4

(#) P_{n1} = maximum installable power on input P_

(E 70)

		M					
		M05	M1	M2	M3	M4	M5
S 10 1	i =	1.4_12.3	1.4_6.9	1.4_8.9	1.4_8.9		
S 20 1		1.9_12.4	1.9_8.5	1.4_10.8	1.4_10.8		
S 30 1			2.4_10.3	1.4_13.1	1.4_13.1	1.4_4.9	
S 40 1			3.1_12.4	1.4_12.4	1.4_12.4	1.4_6.1	
S 50 1			3.8_12.9	1.4_12.9	1.4_12.9	1.4_7.4	1.4_7.4

76 MOMENT OF INERTIA

The following charts indicate moment of inertia values Jr [kgm^2] referred to the gear unit high speed shaft. A key to the symbols used follows:

Values under this icon refer to compact gear units, without motor. To obtain the overall moment of inertia for the gearmotor just add the value of the inertia for the specific compact motor, given in the relevant rating chart.

Values under this symbol refer to gearboxes with IEC motor adaptor (IEC size...).

This symbol refers to gearbox values.

S 10

	i	J (•10^{-4}) [kgm^2]							
			IEC						
			63	71	80	90	100	112	
S 10 1_1.4	1.4	0.33	1.8	1.8	3.2	3.1	4.4	4.4	1.2
S 10 1_1.9	1.9	0.22	1.7	1.7	3.1	3.0	4.3	4.3	1.1
S 10 1_2.5	2.5	0.16	1.6	1.6	3.0	2.9	4.2	4.2	1.0
S 10 1_3.2	3.2	0.10	1.6	1.6	3.0	2.9	4.2	4.2	0.97
S 10 1_3.9	3.9	0.08	1.5	1.5	2.9	2.9	4.2	4.2	0.95
S 10 1_4.7	4.7	0.06	1.5	1.5	2.9	2.8	4.1	4.1	0.93
S 10 1_6.1	6.1	0.04	1.5	1.5	2.9	2.8	4.1	4.1	0.92
S 10 1_6.9	6.9	0.03	1.5	1.5	2.9	2.8	4.1	4.1	0.91
S 10 1_8.9	8.9	0.02	1.5	1.5	2.9	2.8	4.1	4.1	0.90
S 10 1_10.3	10.3	0.02	1.5	1.5	—	—	—	—	0.89
S 10 1_12.3	12.3	0.01	1.5	1.5	—	—	—	—	0.89

S 20

	i	J (•10-4) [kgm2]							
			IEC						
			63	71	80	90	100	112	
S 20 1_1.4	1.4	0.73	—	—	3.6	3.5	4.8	4.8	2.7
S 20 1_1.9	1.9	0.48	1.9	1.9	3.3	3.3	4.6	4.6	2.4
S 20 1_2.4	2.4	0.34	1.8	1.8	3.2	3.1	4.4	4.4	2.3
S 20 1_3.1	3.1	0.20	1.7	1.7	3.0	3.0	4.3	4.3	2.1
S 20 1_3.9	3.9	0.14	1.6	1.6	3.0	2.9	4.2	4.2	2.1
S 20 1_4.8	4.8	0.12	1.6	1.6	3.0	2.9	4.2	4.2	2.0
S 20 1_5.8	5.8	0.08	1.6	1.5	2.9	2.9	4.2	4.2	2.0
S 20 1_7.2	7.2	0.06	1.5	1.5	2.9	2.8	4.1	4.1	2.0
S 20 1_8.5	8.5	0.05	1.5	1.5	2.9	2.8	4.1	4.1	2.0
S 20 1_10.8	10.8	0.03	1.5	1.5	2.9	2.8	4.1	4.1	1.9
S 20 1_12.4	12.4	0.02	1.5	1.5	—	—	—	—	1.9

S 30

	i	J (•10-4) [kgm2]								
			IEC							
			63	71	80	90	100	112	132	
S 30 1_1.4	1.4	1.5	—	—	4.3	4.3	5.6	5.6	18	3.8
S 30 1_1.8	1.8	1.1	—	—	3.9	3.8	5.1	5.1	18	3.4
S 30 1_2.4	2.4	0.59	2.1	2.0	3.4	3.4	4.7	4.7	17	2.9
S 30 1_3.1	3.1	0.45	1.9	1.9	3.3	3.2	4.5	4.5	17	2.8
S 30 1_3.9	3.9	0.33	1.8	1.8	3.2	3.1	4.4	4.4	17	2.7
S 30 1_4.9	4.9	0.24	1.7	1.7	3.1	3.0	4.3	4.3	17	2.6
S 30 1_5.8	5.8	0.19	1.7	1.7	3.0	3.0	4.3	4.3	—	2.6
S 30 1_7.1	7.1	0.14	1.6	1.6	3.0	2.9	4.2	4.2	—	2.5
S 30 1_8.9	8.9	0.10	1.6	1.6	2.9	2.9	4.2	4.2	—	2.5
S 30 1_10.3	10.3	0.08	1.5	1.5	2.9	2.9	4.2	4.2	—	2.4
S 30 1_13.1	13.1	0.05	1.5	1.5	2.9	2.8	4.1	4.1	—	2.4

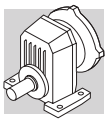

S 40

	i	J (•10-4) [kgm2]								
			IEC							
			63	71	80	90	100	112	132	
S 40 1_1.4	1.4	3.7	—	—	6.5	6.5	7.8	7.8	23	14
S 40 1_1.9	1.9	2.4	—	—	5.2	5.2	6.5	6.5	21	13
S 40 1_2.4	2.4	1.6	—	—	4.4	4.4	5.7	5.7	21	12
S 40 1_3.1	3.1	1.1	2.6	2.6	4.0	3.9	5.2	5.2	20	12
S 40 1_3.8	3.8	0.82	2.3	2.3	3.7	3.6	4.9	4.9	18	11
S 40 1_4.8	4.8	0.50	2.0	2.0	3.3	3.3	4.6	4.6	18	11
S 40 1_6.1	6.1	0.39	1.8	1.8	3.2	3.2	4.5	4.5	18	11
S 40 1_7.2	7.2	0.30	1.8	1.8	3.1	3.1	4.4	4.4	—	11
S 40 1_8.6	8.6	0.22	1.7	1.7	3.1	3.0	4.3	4.3	—	11
S 40 1_10.7	10.7	0.15	1.6	1.6	3.0	2.9	4.2	4.2	—	11
S 40 1_12.4	12.4	0.12	1.6	1.6	3.0	2.8	4.2	4.2	—	11

S 50

	i	J (•10-4) [kgm2]										
			IEC									
			63	71	80	90	100	112	132	160	180	
S 50 1_1.4	1.4	8.2	—	—	11	11	12	12	27	86	84	19
S 50 1_1.8	1.8	5.9	—	—	8.8	8.7	10	10	25	84	82	16
S 50 1_2.4	2.4	3.9	—	—	6.8	6.7	8.0	8.0	23	82	80	14
S 50 1_3.0	3.0	2.7	—	—	5.5	5.5	6.8	6.8	22	81	79	13
S 50 1_3.8	3.8	1.9	3.3	3.3	4.7	4.6	5.9	5.9	21	80	78	12
S 50 1_4.8	4.8	1.4	2.8	2.8	4.2	4.1	5.4	5.4	21	79	77	12
S 50 1_6.1	6.1	0.89	2.4	2.4	3.7	3.7	5.0	5.0	21	79	77	11
S 50 1_7.4	7.4	0.63	2.1	2.1	3.5	3.4	4.7	4.7	20	79	77	11
S 50 1_8.8	8.8	0.50	2.0	2.0	3.4	3.3	4.6	4.6	—	—	—	11
S 50 1_10.5	10.5	0.36	1.8	1.8	3.2	3.1	4.4	4.4	—	—	—	11
S 50 1_12.9	12.9	0.25	1.7	1.7	3.1	3.0	4.3	4.3	—	—	—	11

77 DIMENSIONS

S 10...M

P

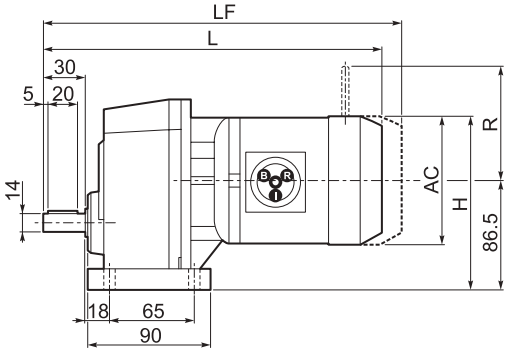

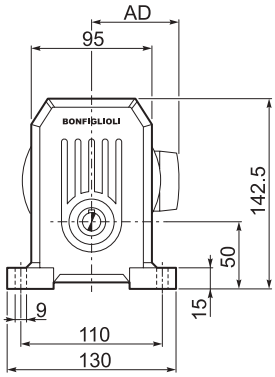

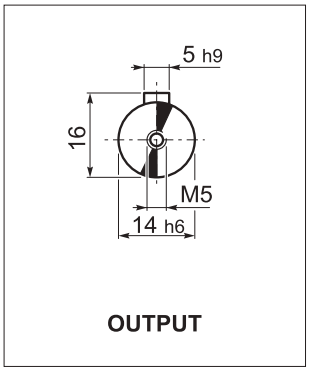

F

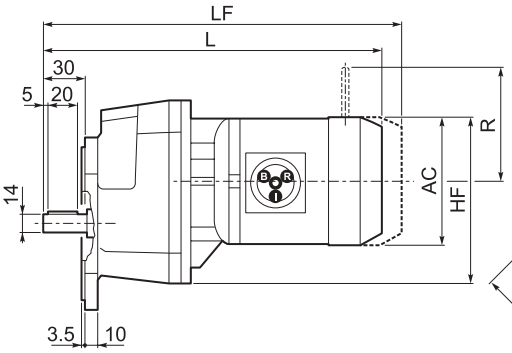

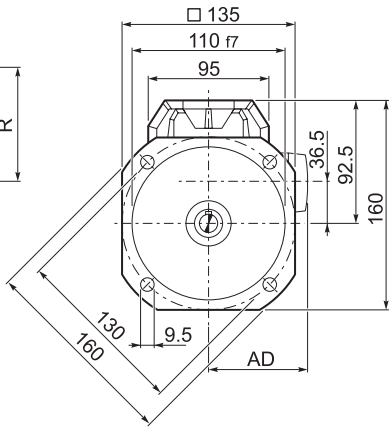

									M...FD M...FA		M...FD		M...FA	
			AC	H	HF	L	AD		LF		R	AD	R	AD
S 10 1	**S05**	**M05**	121	147	143	315	95	8	381	11	96	122	116	95
S 10 1	**S1**	**M1**	137	155	151	344	102	10	405	13	103	135	124	108
S 10 1	**S2**	**M2S**	156	164	160	367	111	13	443	17	129	146	134	119
S 10 1	**S3**	**M3S**	195	184	180	416	135	19	512	24	160	158	160	142
S 10 1	**S3**	**M3L**	195	184	180	448	135	21	539	26	160	158	160	142

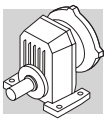

S 10...P (IEC)

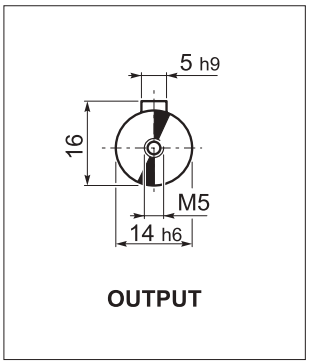

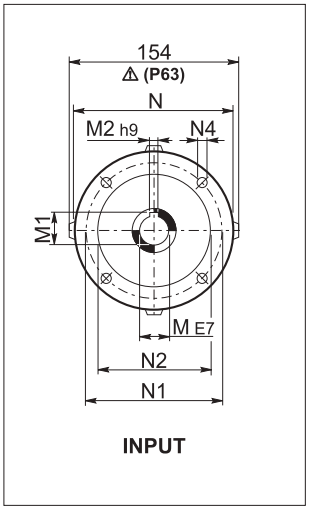

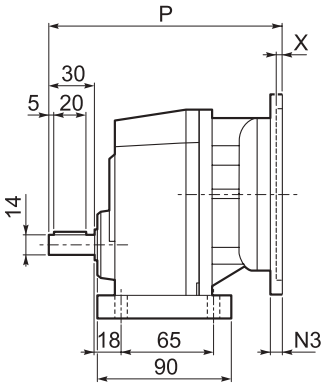

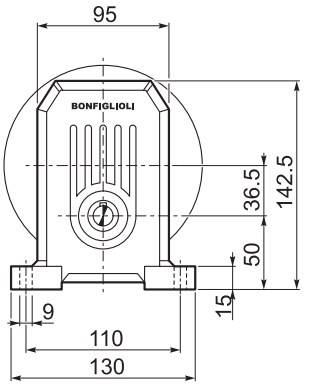

P

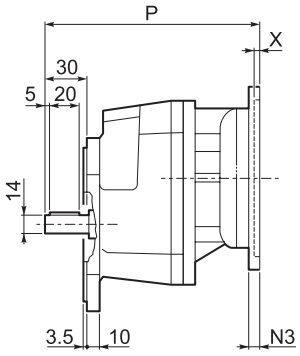

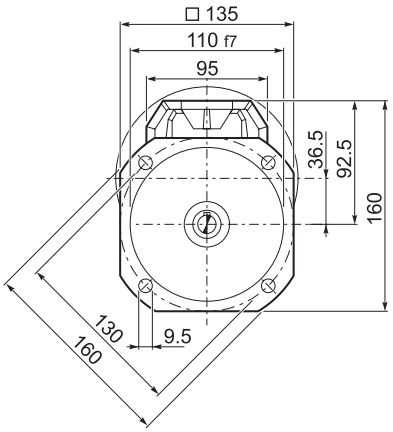

F

		M	M1	M2	N	N1	N2	N3	N4	P	X	
S 10 1	**P63**	11	12.8	4	140	115	95	—	M8x10	189	4	5
S 10 1	**P71**	14	16.3	5	160	130	110	—	M8x10	189	4.5	5
S 10 1	**P80**	19	21.8	6	200	165	130	—	M10x14.5	208	4	6
S 10 1	**P90**	24	27.3	8	200	165	130	—	M10x14.5	208	4	6
S 10 1	**P100**	28	31.3	8	250	215	180	—	M12x16	218	4.5	10
S 10 1	**P112**	28	31.3	8	250	215	180	—	M12x16	218	4.5	10

S 10...HS

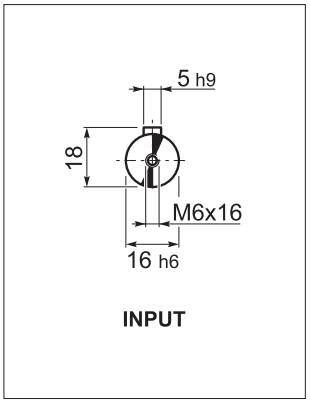

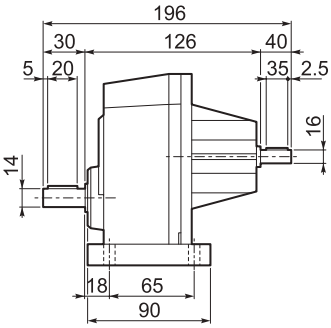

P

	4.4

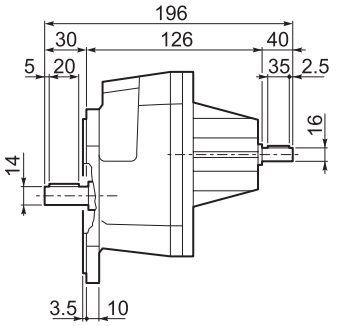

F

	4.5

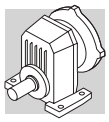

S 20...M

P

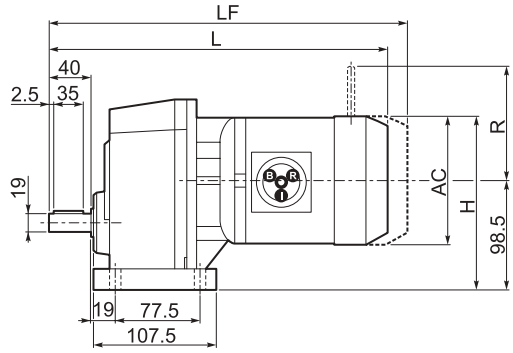

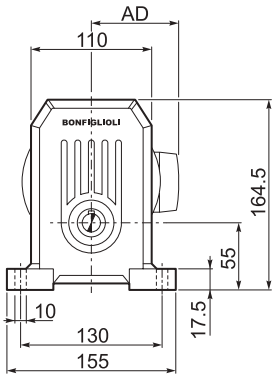

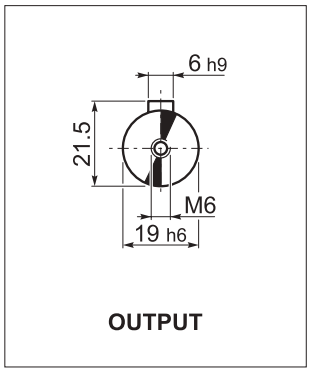

F

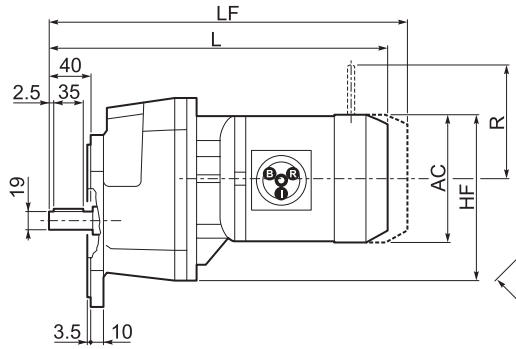

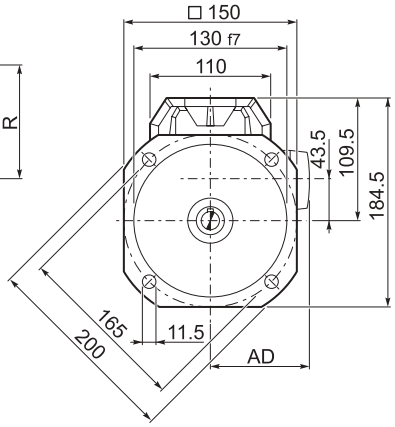

									M...FD M...FA		M...FD		M...FA	
			AC	H	HF	L	AD		LF		R	AD	R	AD
S 20 1	**S05**	**M05**	121	159	153	333.5	95	10	399.5	12	96	122	116	95
S 20 1	**S1**	**M1**	137	167	161	362.5	102	12	423.5	14	103	135	124	108
S 20 1	**S2**	**M2S**	156	176	170	385.5	111	16	461.5	19	129	146	134	119
S 20 1	**S3**	**M3S**	195	196	190	434.5	135	20	530.5	25	160	158	160	142
S 20 1	**S3**	**M3L**	195	196	190	466.5	135	26	557.5	31	160	158	160	142

S 20...P(IEC)

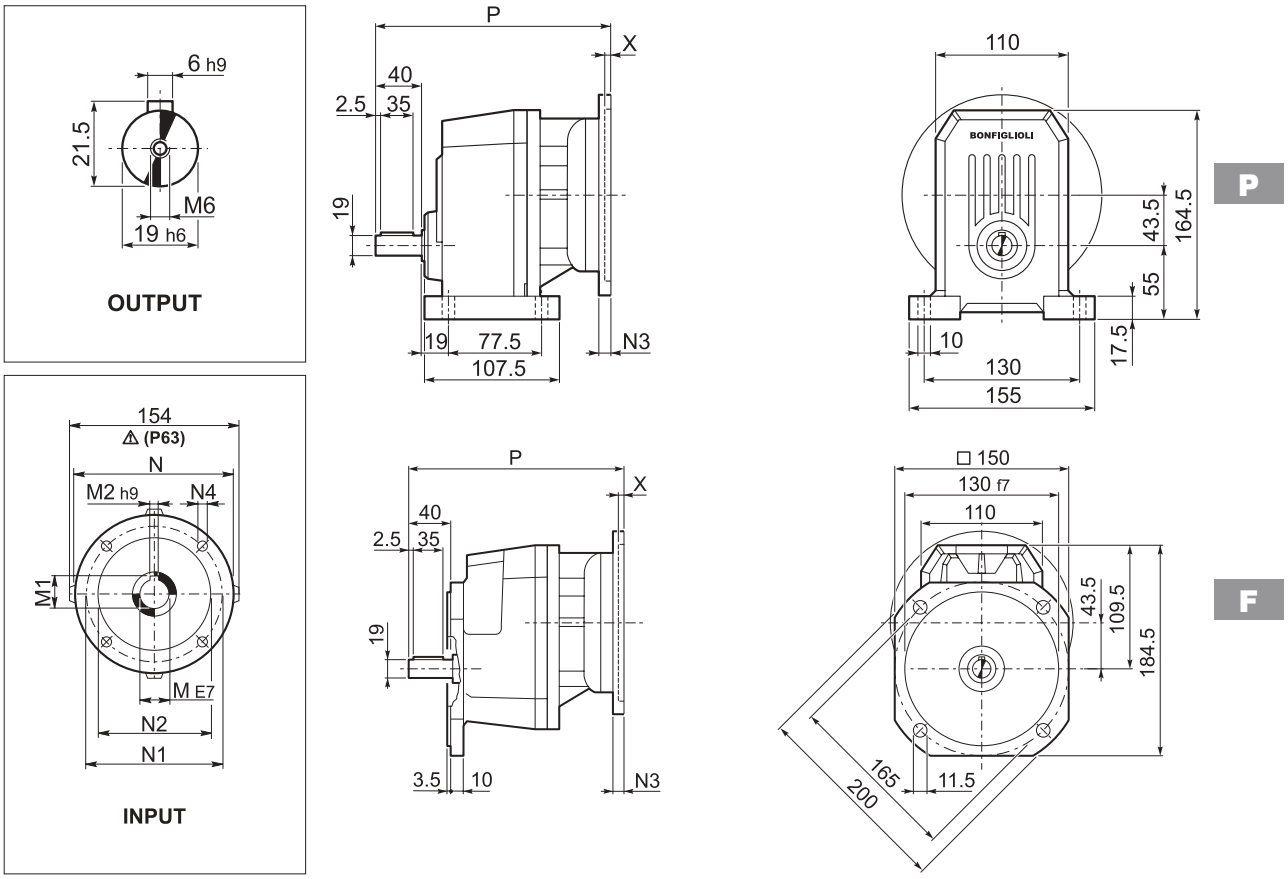

		M	M1	M2	N	N1	N2	N3	N4	P	X	
S 20 1	**P63**	11	12.8	4	140	115	95	—	M8x10	207	4	6
S 20 1	**P71**	14	16.3	5	160	130	110	—	M8x10	207	4.5	6
S 20 1	**P80**	19	21.8	6	200	165	130	—	M10x14.5	227	4	7
S 20 1	**P90**	24	27.3	8	200	165	130	—	M10x14.5	227	4	7
S 20 1	**P100**	28	31.3	8	250	215	180	—	M12x16	237	4.5	11
S 20 1	**P112**	28	31.3	8	250	215	180	—	M12x16	237	4.5	11

S 20...HS

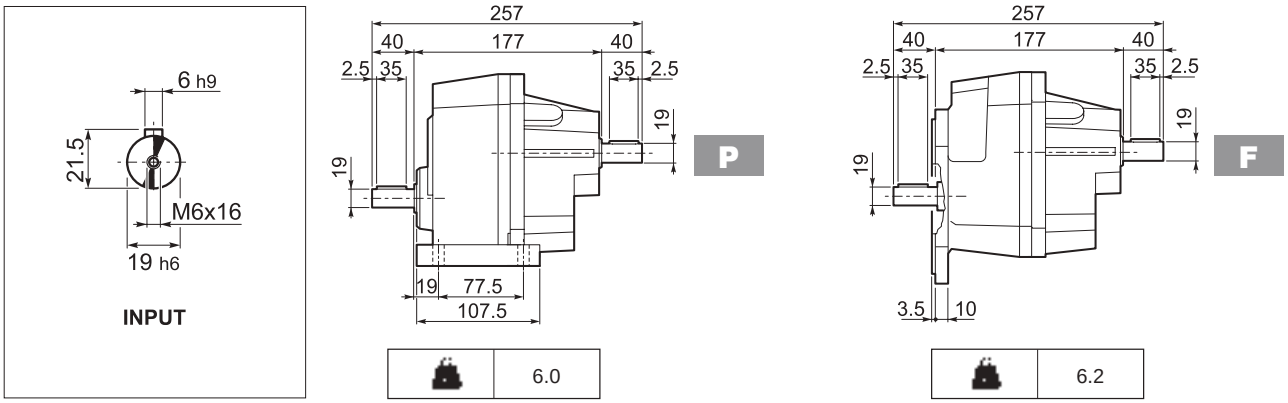

S 30...M

P

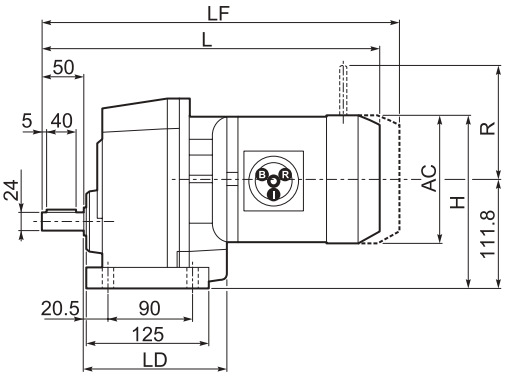

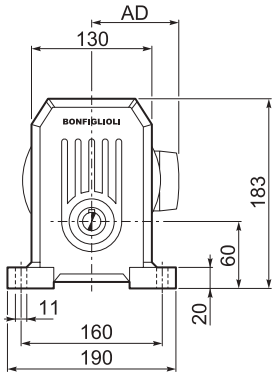

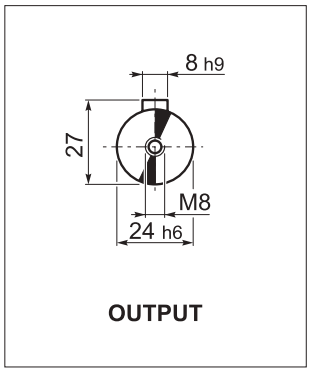

F

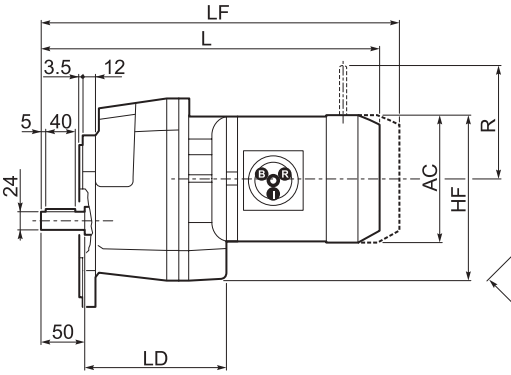

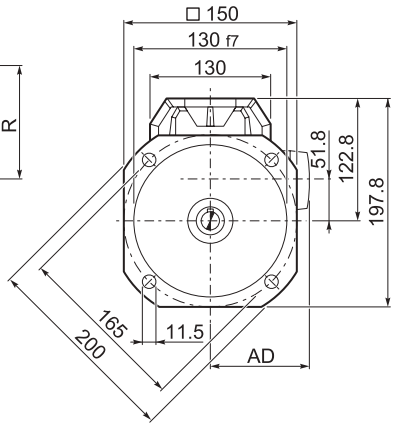

										M...FD M...FA		M...FD		M...FA	
			AC	H	HF	L	LD	AD		LF		R	AD	R	AD
S 30 1	**S1**	**M1**	137	180	177	387.5	140.5	102	14	448.5	16	103	135	124	108
S 30 1	**S2**	**M2S**	156	190	186	410.5	152.5	111	18	486.5	21	129	146	134	119
S 30 1	**S3**	**M3S**	195	209	206	459.5	162.5	135	23	555.5	28	160	158	160	142
S 30 1	**S3**	**M3L**	195	209	206	491.5	162.5	135	32	582.5	37	160	158	160	142
S 30 1	**S4**	**M4**	258	240.8	237	599.5	—	193	71	708.5	87	226	210	217	193
S 30 1	**S4**	**M4LC**	258	240.8	237	634.5	—	193	79	733.5	95	226	210	217	193

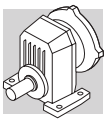

S 30...P(IEC)

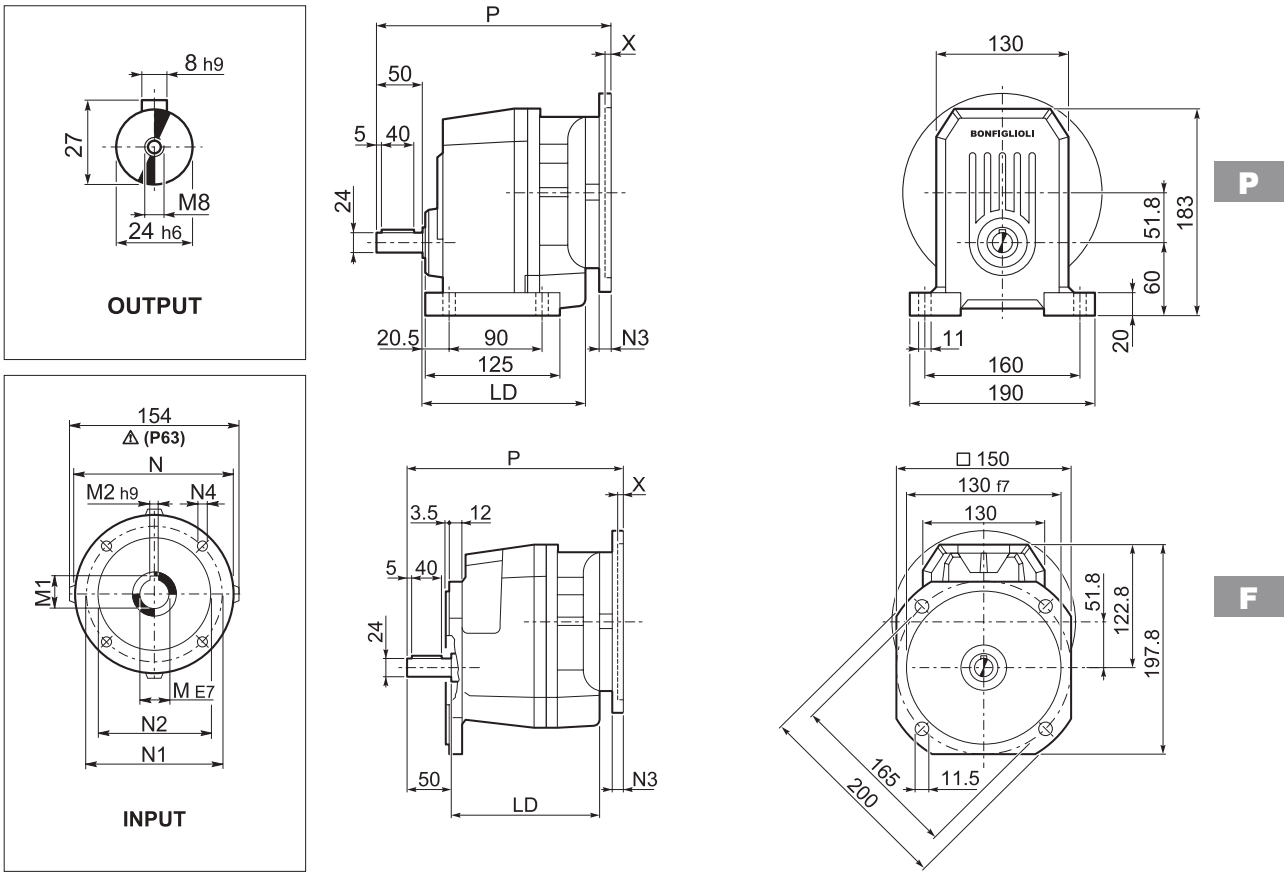

		LD	M	M1	M2	N	N1	N2	N3	N4	P	X	
S 30 1	**P63**	152.5	11	12.8	4	140	115	95	—	M8x10	232	4	8
S 30 1	**P71**	152.5	14	16.3	5	160	130	110	—	M8x10	232	4.5	8
S 30 1	**P80**	162.5	19	21.8	6	200	165	130	—	M10x14.5	252	4	9
S 30 1	**P90**	162.5	24	27.3	8	200	165	130	—	M10x14.5	252	4	9
S 30 1	**P100**	162.5	28	31.3	8	250	215	180	—	M12x16	262	4.5	13
S 30 1	**P112**	162.5	28	31.3	8	250	215	180	—	M12x16	262	4.5	13
S 30 1	**P132**	—	38	41.3	10	300	265	230	16	14	298.5	5	21

S 30...HS

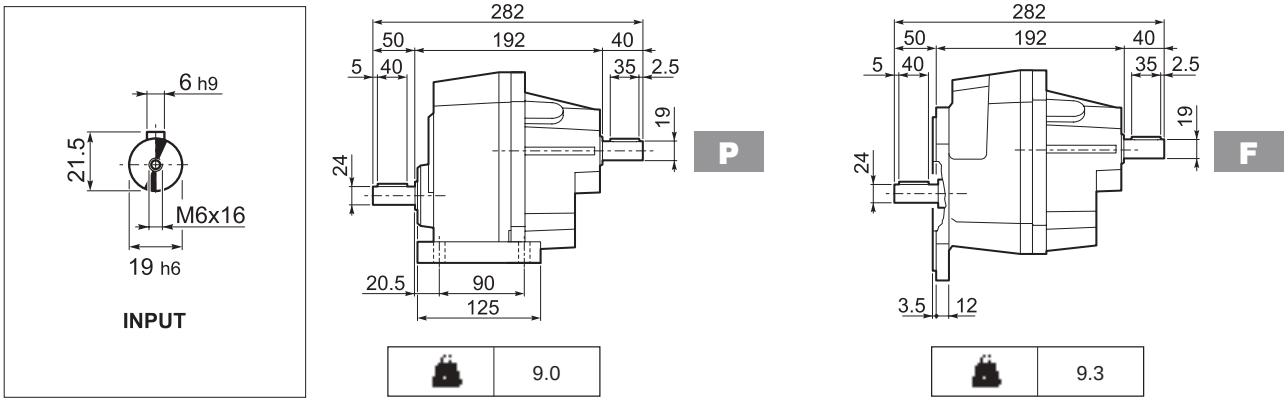

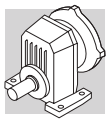

S 40...M

P

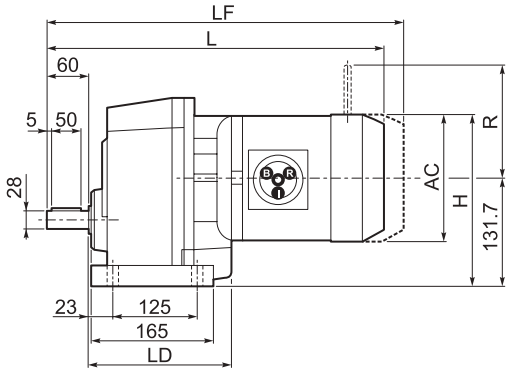

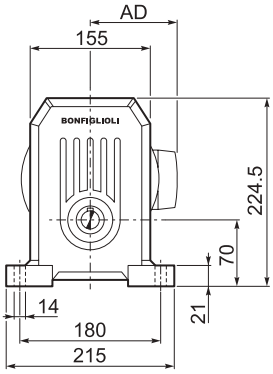

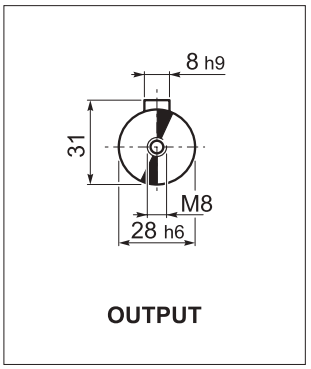

F

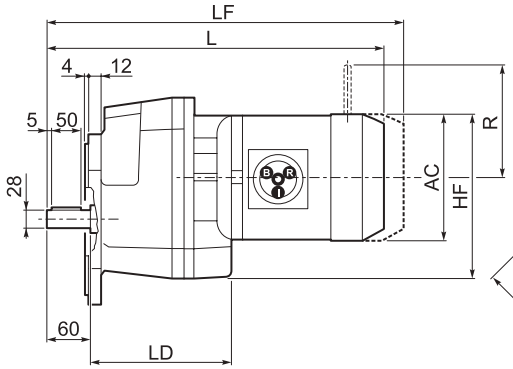

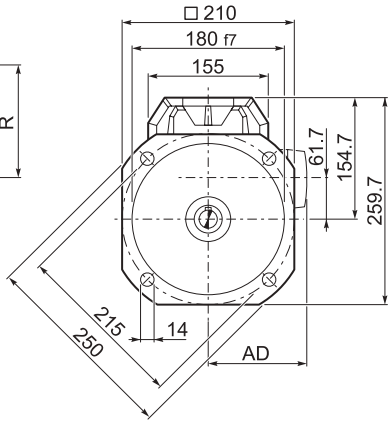

										M...FD M...FA		M...FD		M...FA	
			AC	H	HF	L	LD	AD		LF		R	AD	R	AD
S 40 1	**S1**	**M1**	137	200	197	429.5	168	102	28	490.5	31	103	135	124	108
S 40 1	**S2**	**M2S**	156	210	206	452.5	183.5	111	34	528.5	37	129	146	134	119
S 40 1	**S3**	**M3S**	195	229	226	501.5	199.5	135	39	597.5	44	160	158	160	142
S 40 1	**S3**	**M3L**	195	229	226	533.5	199.5	135	48	624.5	53	160	158	160	142
S 40 1	**S4**	**M4**	258	261	257	641.5	—	193	74	750.5	86	226	210	217	193
S 40 1	**S4**	**M4LC**	258	261	257	676.5	—	193	90	775.5	106	226	210	217	193

S 40...P(IEC)

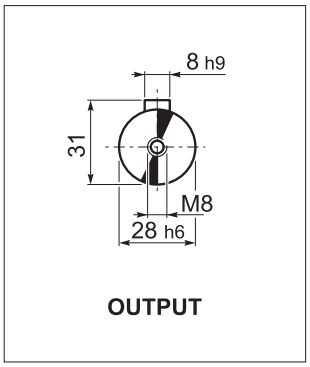

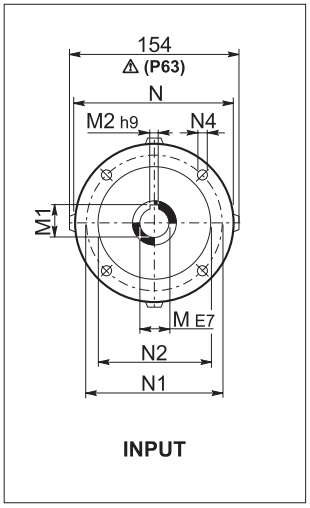

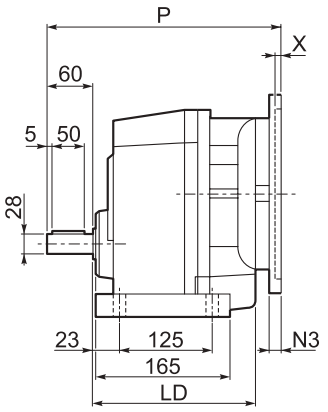

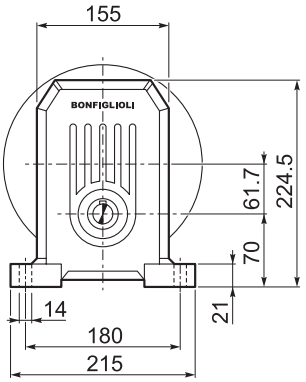

P

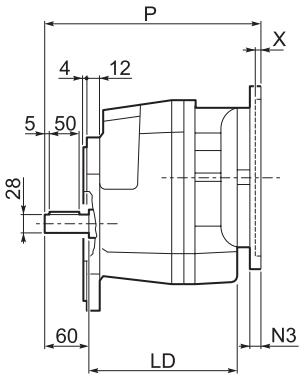

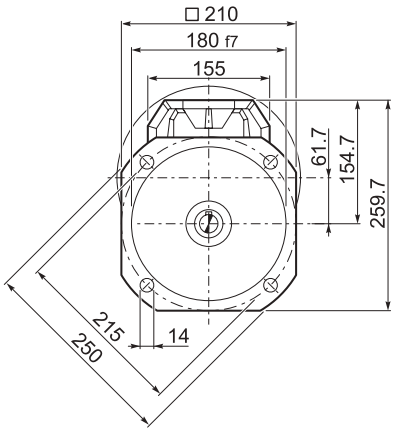

F

		LD	M	M1	M2	N	N1	N2	N3	N4	P	X	
S 40 1	**P63**	183.5	11	12.8	4	140	115	95	—	M8x10	274	4	25
S 40 1	**P71**	183.5	14	16.3	5	160	130	110	—	M8x10	274	4.5	26
S 40 1	**P80**	199.5	19	21.8	6	200	165	130	—	M10x14.5	294	4	26
S 40 1	**P90**	199.5	24	27.3	8	200	165	130	—	M10x14.5	294	4	30
S 40 1	**P100**	—	28	31.3	8	250	215	180	—	M12x16	304	4.5	30
S 40 1	**P112**	—	28	31.3	8	250	215	180	—	M12x16	304	4.5	30
S 40 1	**P132**	—	38	41.3	10	300	265	230	16	14	340	5	32

S 40...HS

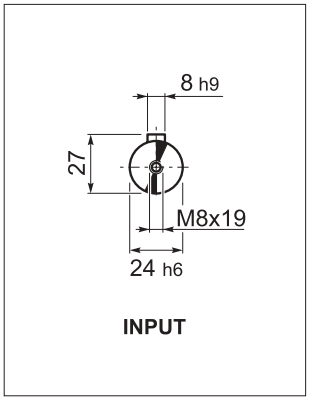

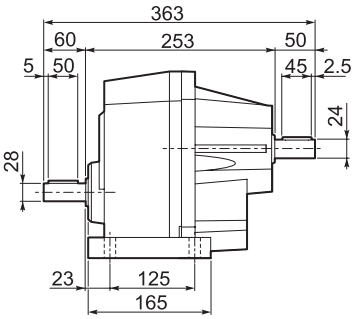

P

	26.0

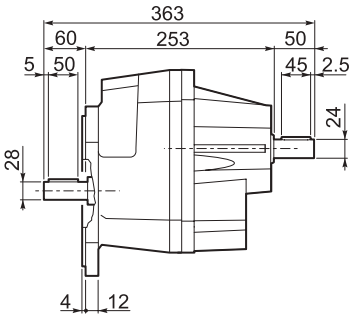

F

	27.7

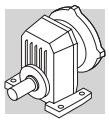

S 50...M

P

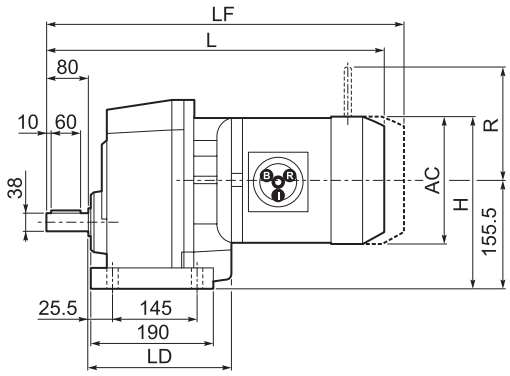

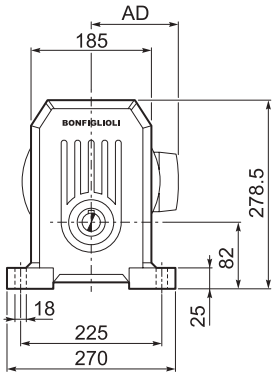

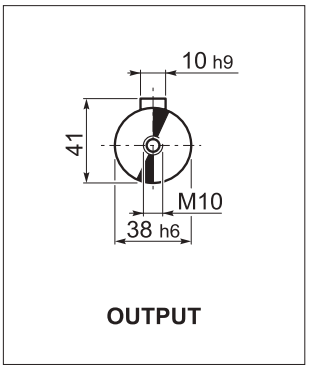

F

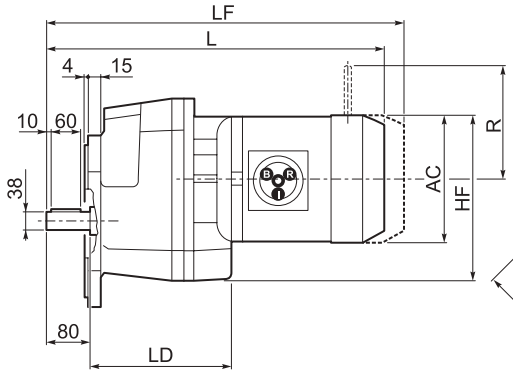

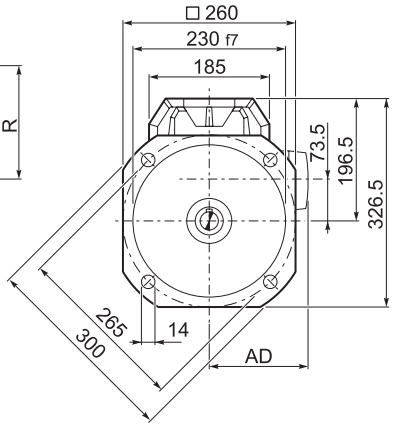

										M...FD M...FA		M...FD		M...FA	
			AC	H	HF	L	LD	AD		LF		R	AD	R	AD
S 50 1	**S1**	**M1**	137	225	222	469	—	102	40	530	42	103	135	124	108
S 50 1	**S2**	**M2S**	156	233	230	492.5	204.5	111	44	568.5	47	129	146	134	119
S 50 1	**S3**	**M3S**	195	253	250	541.5	219.5	135	51	637.5	56	160	158	160	142
S 50 1	**S3**	**M3L**	195	253	250	573.5	219.5	135	60	664.5	65	160	158	160	142
S 50 1	**S4**	**M4**	258	284	281	681.5	204.5	193	86	790.5	98	226	210	217	193
S 50 1	**S4**	**M4LC**	258	284	281	716.5	204.5	193	94	815.5	106	226	210	217	193
S 50 1	**S5**	**M5S**	310	310.5	307	768	—	245	114	908	138	266	245	247	245
S 50 1	**S5**	**M5L**	310	310.5	307	812	—	245	130	952	154	266	245	247	245

Bonfiglioli Riduttori

S 50...P(IEC)

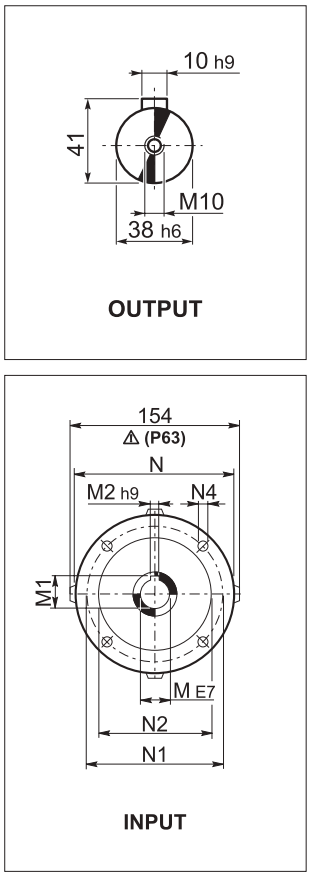

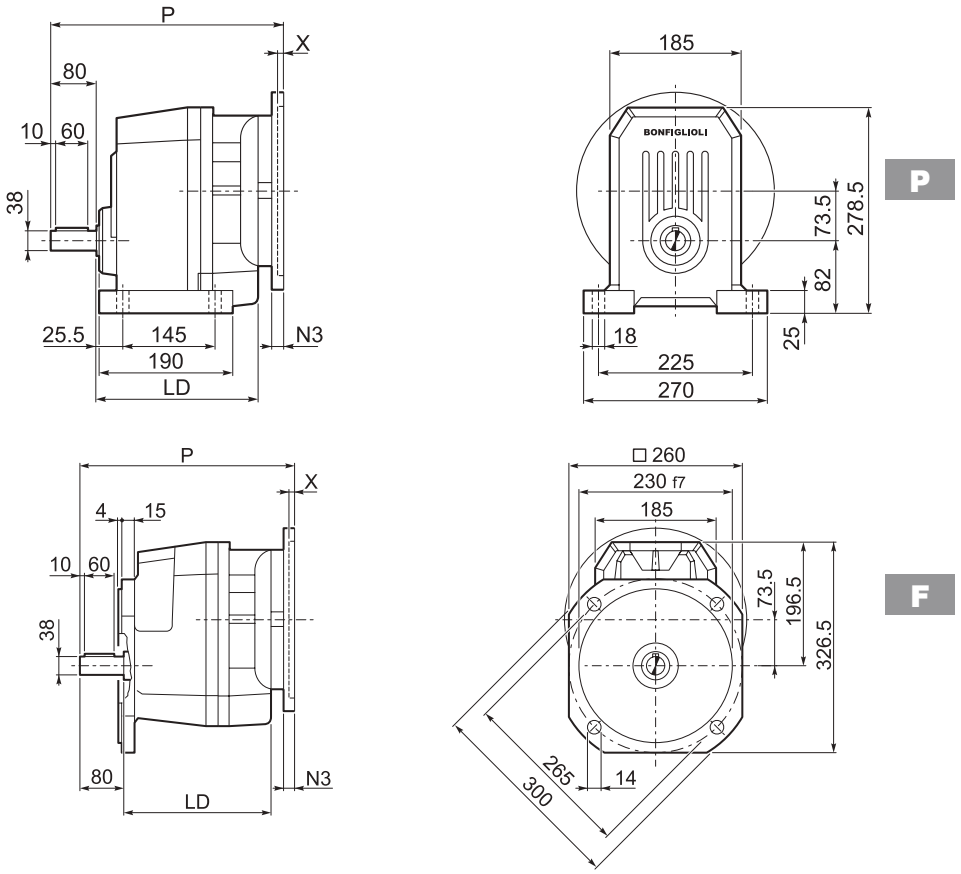

		LD	M	M1	M2	N	N1	N2	N3	N4	P	X	
S 50 1	**P63**	204.5	11	12.8	4	140	115	95	—	M8x10	314	4	35
S 50 1	**P71**	204.5	14	12.8	4	160	130	110	—	M8x10	314	4.5	35
S 50 1	**P80**	219.5	19	16.3	5	200	165	130	—	M10x14.5	314	4	37
S 50 1	**P90**	219.5	24	21.8	6	200	165	130	—	M10x14.5	334	4	37
S 50 1	**P100**	204.5	28	27.3	8	250	215	180	—	M12x16	344	4.5	41
S 50 1	**P112**	204.5	28	31.3	8	250	215	180	—	M12x16	344	4.5	41
S 50 1	**P132**	204.5	38	41.3	10	300	265	230	16	14	380	5	44
S 50 1	**P160**	—	42	45.3	12	350	300	250	23	18	431	5.5	48
S 50 1	**P180**	—	48	51.8	14	350	300	250	23	18	431	5.5	48

S 50...HS

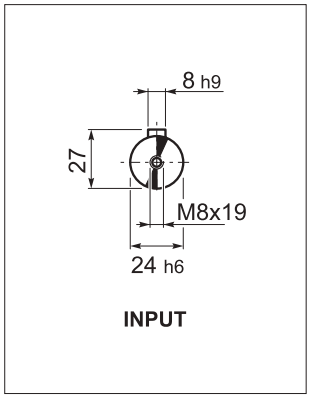

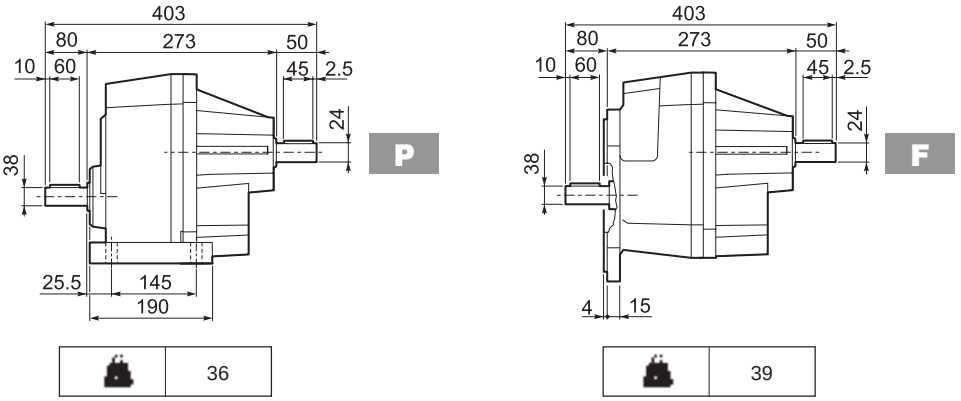

	36

	39

M1 SYMBOLS AND UNITS OF MEASUREMENT

Symbols	Units of Measure	Description
cosφ	–	Power factor
η	–	Efficiency
f_m	–	Power adjusting factor
I	–	Cyclic duration factor
I_N	[A]	Rated current
I_S	[A]	Locked rotor current
J_C	[Kgm^2]	Load moment of inertia
J_M	[Kgm^2]	Moment of inertia
K_c	–	Torque factor
K_d	–	Load factor
K_J	–	Inertia factor
M_A	[Nm]	Mean breakaway torque
M_B	[Nm]	Brake torque
M_N	[Nm]	Rated torque
M_L	[Nm]	Counter-torque during acceleration
M_S	[Nm]	Starting torque

Symbols	Units of Measure	Description
n	[min^{-1}]	Rated speed
P_B	[W]	Power drawn by the brake at 20°C
P_n	[kW]	Motor rated power
P_r	[kW]	Required power
t_1	[ms]	Brake response time with one-way rectifier
t_{1s}	[ms]	Brake response time with electronic-controlled rectifier
t_2	[ms]	Brake reaction time with a.c. disconnect
t_{2c}	[ms]	Brake reaction time with a.c. and d.c. disconnect
t_a	[°C]	Ambient temperature
t_f	[min]	Work time at constant load
t_r	[min]	Rest time
W	[J]	Braking work between service interval
W_{max}	[J]	Maximum brake work for each braking
Z	[1/h]	Permissible starting frequency, loaded
Z_0	[1/h]	Max. permissible unloaded starting frequency (I = 50%)

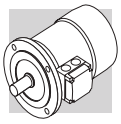

M2 GENERAL CHARACTERISTICS

M2.1 Production range

The asynchronous three-phase electric motors of BONFIGLIOLI RIDUTTORI's production, are available in basic designs IMB5 and derived versions.
The technical characteristics of compact motors, M type, are also supplied in this manual.

M2.2 Standards

The motors described in this catalogue are manufactured to the applicable standards shown in the following table.

(F 1)

Title	CEI	IEC
General requirements for rotating electrical machines	**CEI EN 60034-1**	**IEC 60034-1**
Terminal markings and direction of rotation of rotating machines	**CEI 2-8**	**IEC 60034-8**
Methods of cooling for electrical machines	**CEI EN 60034-6**	**IEC 60034-6**
Dimensions and output ratings for rotating electrical machines	**EN 50347**	**IEC 60072**
Classification of degree of protection provided by enclosures for rotating machines	**CEI EN 60034-5**	**IEC 60034-5**
Noise limits	**CEI EN 60034-9**	**IEC 60034-9**
Classification of type of construction and mounting arrangements	**CEI EN 60034-7**	**IEC 60034-7**
Rated voltage for low voltage mains power	**CEI 8-6**	**IEC 60038**
Vibration level of electric machines	**CEI EN 60034-14**	**IEC 60034-14**

The motors also comply with foreign standards adapted to IEC 60034-1 as shown here below.

(F 2)

DIN VDE 0530	Germany
BS5000 / BS4999	Great Britain
AS 1359	Australia
NBNC 51 - 101	Belgium
NEK - IEC 34	Norway
NF C 51	France
OEVE M 10	Austria
SEV 3009	Switzerland
NEN 3173	Netherlands
SS 426 01 01	Sweden

M2.3 Motors for USA and Canada

CUS

CUS option is available in NEMA Design C execution for BN motors, and NEMA Design B for BX motors, with regards to the electrical features. Motors are certified in compliance with CSA (Canadian Standard) C22.2 N° 100 and UL (Underwriters Laboratory) UL 1004-1 standards, as stated on UL file E308649.
BN motors nameplates show the below marks:

C US

NOTE:
Starting from **June, 1st 2016**, CUS motors whose efficiency is below IE3 (i.e. “Premium Efficiency”) cannot be any longer sold in the USA and Canada, unless one or more of the following conditions apply:

- Double speed motors;
- Motors plated for a non - continuous duty (<80%);
- Motors intended to be operated through variable frequency drive only (properly equipped with “Inverter Duty Only” label, or similar).

The CUS option does not apply to servo-ventilated motors.
US power mains voltages and the corresponding rated voltages to be specified for the motor are indicated in the following table:

(F 3)

Frequency	Mains voltage	V_{mot}
60 Hz	208 V	**200 V**
	240 V	**230 V**
	480 V	**460 V**
	600 V	**575 V**

CUS option is applicable onto 50 Hz operating motors as well.

Motors with voltage in ratio 2 (e.g. 230/460-60; 220/440-60) feature, as standard, a 9-stud terminal board. For same executions, as well as for 575V-60Hz supply, the nominal rating is coincident with the correspondent 50Hz rating.
For DC brake motors type FD, the rectifier is connected to a single-phase 230 VAC supply voltage in the motor terminal box.
Brake power supply for brake motors is as follows:

(F 4)

BN_FD **M_FD**
Wired to terminal box 1~230V a.c.

BN_FA **M_FA**		Specify
Separate power supply	230V Δ	230SA
Separate power supply	460V Y	460SA

Bonfiglioli Riduttori

M2.4 China Compulsory Certification

CCC

Electric motors destined for sale in the People's Republic of China have to be certified under the CCC (China Compulsory Certification) system. BN motors of up to 7 Nm in rated torque are available with CCC certification and a special nameplate bearing the mark shown below:

CCC option is not currently available for servo - ventilated motors.

M2.5 Directives 2006/95/EC (LVD) and 2004/108/EC (EMC)

BN and M motors meet the requirements of Directives 2006/95/EC (Low Voltage Directive) and 2004/108/EC (Electromagnetic Compatibility Directive) and their name plates bear the CE mark.
As for the EMC Directive, construction is in accordance with standards CEI EN 60034-1, EN 61000-6-2, EN 61000-6-4.
Motors with FD brakes, when fitted with the suitable capacitive filter at rectifier input (option **CF**), meet the emission limits required by Standard EN 61000-6-3:2007 "Electromagnetic compatibility - Generic Emission Standard - Part 6-3 Residential, commercial and light industrial environment".
Motors also meet the requirements of standard CEI EN 60204-1 "Electrical equipment of machines".
The responsibility for final product safety and compliance with applicable directives rests with the manufacturer or the assembler who incorporate the motors as component parts.

M2.6 Tolerances

As per the Norms applicable the tolerances here below apply to the following quantities.

(F 5)

-0.15 (1 - η) P ≤ 50kW	Efficiency
-(1 - cosφ)/6 min 0.02 max 0.07	Power factor
±20% *	Slip
+20%	Locked rotor current
-15% +25%	Locked rotor torque
-10%	Max. torque

* ± 30% for motors with Pn < 1 kW

M3 MECHANICAL FEATURES

M3.1 Versions

EC-normalised BN motors are available in the design versions indicated in table (F6) as per Standards CEI EN 60034-14.

Mounting versions are:

IM B5 (basic)
IM V1, IM V3 (derived)

IM B5 design motors can be installed in positions IM V1 and IM V3; in such cases, the basic design IM B5 is indicated on the motor name plate.
In design versions with a vertically located motor and shaft downwards, it is recommended to request the drip cover (always necessary for brake motors). This facility, included in the option list should be specified when ordering as it does not come as a standard device

(F 6)

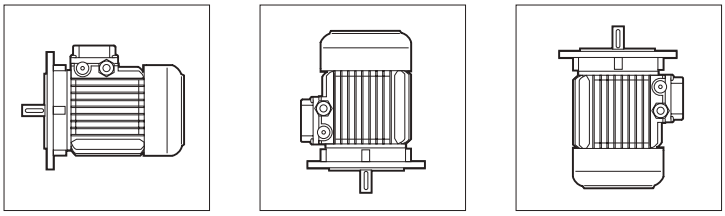

IM B5 **IM V1** **IM V3**

Flange output motors are also available with reduced coupling dimensions, as indicated in the table below - executions **B5R**. Their use in combination with gearboxes must be however coherent with the maximum installable power on gearboxes themselves (see chapters “Motors availability”). In case this condition is not met need to contact the Technical Service for the checking of the combination.

(F 7)

	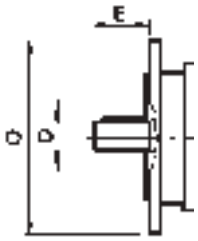					
	BN 71	**BN 80**	**BN 90**	**BN 100**	**BN 112**	**BN 132**
	DxE - Ø					
B5R (1)	11x23 - 140	14x30 - 160	19x40 - 200	24x50 - 200	24x50 - 200	28x60 - 250

(1) flange with through holes

M3.2 Degree of protection

IP..

The following chart provides an overview of the degrees of protection available.
In addition to the degree of protection specified when ordering, motors to be installed outdoors require protection against direct sunlight and also – when they are to be installed vertically down – a drip cover to prevent the ingress of water and solid particles (option **RC**).

(F 8)

		IP 54	IP 55	IP 56
BN	**M**	⊖	standard	on request
BN_FD **BN_FA**	**M_FD** **M_FA**	standard	on request	⊖

M3.3 Cooling

The motors are externally ventilated (IC 411 to CEI EN 60034-6) and are equipped with a plastic fan working in both directions. The motors must be installed allowing sufficient space between fan cowl and the nearest wall to ensure free air intake and allow access for maintenance purposes on motor and brake, if supplied.
Independent, forced air ventilation (IC 416) can be supplied on request (option U1).
This solution enables to increase the motor duty factor when driven by an inverter and operating at reduced speed.

M3.4 Direction of rotation

Rotation is possible in both directions. If terminals U1, V1, and W1 are connected to line phases L1,L2 and L3, clockwise rotation (looking from drive end) is obtained. For counterclockwise rotation, switch two phases.

M3.5 Noise

Noise levels, measured using the method prescribed by ISO 1680 Standards, are within the maximum levels specified by Standards CEI EN 60034-9.

M3.6 Vibrations and balancing

Rotor shafts are balanced with half key fitted and fall within the vibration class N, as per Standard CEI EN 60034-14.
If a further reduced noise level is required improved balancing carequired improved balancing can be optionally requested (class B).
Table below shows the value for the vibration velocity for standard (A) and improved (B) balancing.

(F 9)

Vibration class	Angular velocity n [min^{-1}]	Limits of the vibration velocity [mm/s] **BN 56 ≤ H ≤ BN 200** **M05 ≤ H ≤ M5**
A	600 < n < 3600	1.6
B	600 < n < 3600	0.70

Values refer to measures with freely suspended motor in unloaded conditions.

M3.7 Terminal box

Terminal board features 6 studs for eyelet terminal connection (9 studs execution for US voltage “Dual Voltage”).
A ground terminal is also supplied for earthing of the equipment.
Terminals number and type are shown in the following table.
For brake power supply, please read par. M6 (brake FD), M7 (brake FA).
Brakemotors house the a.c./d.c. rectifier (factory pre-wired) inside the terminal box.
Wiring instructions are provided either in the box or in the user manual.

(F 10)

		No. of terminals	Terminal threads	Wire max cross section area mm^2
BN 56 ... BN 71	**M05, M1**	6	M4	2.5
BN 80, BN 90	**M2**	6	M4	2.5
BN 100 ... BN 112	**M3**	6	M5	6
BN 132 ... BN 160MR	**M4**	6	M5	6
BN 160M ... BN 180M	**M5**	6	M6	16
BN 180L ... BN 200L	**–**	6	M8	25
BN 63 ... BN 160MR	**M05 ... M4**	9	M4	6
BN 160M ... BN 200L	**M5**	9	M6	16

M3.8 Cable entry

The holes used to bring cables to terminal boxes use metric threads in accordance with standard EN 50262 as indicated in the table here after.

(F 11)

		Cable entry	Max. cable diameter allowed [mm]
BN 63	**M05**	2 x M20 x 1.5	13
BN 71	**M1**	2 x M25 x 1.5	17
BN 80 - BN 90	**M2**	2 x M25 x 1.5	17
BN 100	**M3**	2 x M32 x 1.5	21
		2 x M25 x 1.5	17
BN 112	**—**	2 x M32 x 1.5	21
		2 x M25 x 1.5	17
BN 132...BN 160MR	**M4**	4 x M32 x 1.5	21
BN 160M...BN 200L	**M5**	2 x M40 x 1.5	28

M3.9 Bearings

Life lubricated preloaded radial ball bearings are used, types are shown in the chart here under.
Calculated endurance lifetime L_{10h}, as per ISO 281, in unloaded condition, exceeds 40000 hrs.
DE = drive end
NDE = non drive end

(F 12)

	DE	**NDE**	
	M, M_FD, M_FA	**M**	**M_FD, M_FA**
M05	6004 2Z C3	6201 2Z C3	6201 2RS C3
M1	6004 2Z C3	6202 2Z C3	6202 2RS C3
M2	6007 2Z C3	6204 2Z C3	6204 2RS C3
M3	6207 2Z C3	6206 2Z C3	6206 2RS C3
M4	6309 2Z C3	6308 2Z C3	6308 2RS C3
M5	6309 2Z C3	6309 2Z C3	6309 2RS C3

(F 13)

	DE	**NDE**	
	BN	**BN**	**BN_FD BN_FA**
BN 56	6201 2Z C3	6201 2Z C3	–
BN 63	6201 2Z C3	6201 2Z C3	6201 2RS C3
BN 71	6202 2Z C3	6202 2Z C3	6202 2RS C3
BN 80	6204 2Z C3	6204 2Z C3	6204 2RS C3
BN 90	6205 2Z C3	6205 2Z C3	6305 2RS C3
BN 100	6206 2Z C3	6206 2Z C3	6206 2RS C3
BN 112	6306 2Z C3	6306 2Z C3	6306 2RS C3
BN 132	6308 2Z C3	6308 2Z C3	6308 2RS C3
BN 160MR	6309 2Z C3	6308 2Z C3	6308 2RS C3
BN 160M/L	6309 2Z C3	6309 2Z C3	6309 2RS C3
BN 180M	6310 2Z C3	6309 2Z C3	6309 2RS C3
BN 180L	6310 2Z C3	6310 2Z C3	6310 2RS C3
BN 200L	6312 2Z C3	6310 2Z C3	6310 2RS C3

M4 ELECTRICAL CHARACTERISTICS

M4.1 Voltage

Single speed motors are provided in standard execution either for nominal voltage 230 / 400 V Δ/Y, 50 Hz, or 400 / 690 V Δ/Y, 50 Hz, with a voltage tolerance of ± 10%, according to what is specified on the below table.
On all the motors BN and M, for which the voltage / frequency configuration is not included on the below table, the voltage tolerance is reduced down to ± 5%.
For the operation out of the tolerance boundaries, the temperature may exceed by 10 K the limit provided by the adopted insulation class.
The motors are suitable for operation on distribution European grid with voltage complying with the pubblication IEC 60038.

(F 14)

			V_{mot} ± 10 % 3 ~	**Configuation**
IE1	**BN 56 ... BN 132**	**M0 … M4**	230 / 400 V - Δ/Y - 50 Hz	Standard
			400 / 690 V - Δ/Y - 50 Hz	On request at no extra charge
			460 V Y - 60 Hz	Standard
	BN 160 ... 200	**M5**	400 / 690 V - Δ/Y - 50 Hz	Standard
			460 V Δ - 60 Hz	Standard

[1] 4 pole motor only

The only rated voltage for motors type 50Hz and all double speed motors is 400V.
Applicable tolerances as per CEI EN 60034-1.

The table below shows the wiring options available.

(F 15)

Pole		Wiring options
2	**BN 63 ... BN 200**	Δ / Y (²)
4	**BN 56 ... BN 200**	
6	**BN 63 ... BN 200**	
8	**BN 71 ... BN 132**	
2/4	**BN 63 ... BN 132**	Δ / YY (Dahlander)
2/6	**BN 71 ... BN 132**	Y / Y (Two windings)
2/8	**BN 71 ... BN 132**	
2/12	**BN 80 ... BN 132**	
4/6	**BN 71 ... BN 132**	
4/8	**BN 80 ... BN 132**	Δ / YY (Dahlander)

(²) Motors with voltage in ratio 2 (ex. 230/460 - 60) will be equipped with a 9 pin terminal box with winding connection either Δ Δ/ Δ or YY / Y (except 6 pole BN 63 Δ / Y)

Bonfiglioli Riduttori

M4.2 Frequency

Rated output power BN / M for 60 Hz operation is shown in the following diagram.

(F 16)

		P_n [kW]			
		2P	4P	6P	8P (*)
BN 56A	**–**	–	0.07	–	–
BN 56B	**M0B**	–	0.1	–	–
BN 63A	**M05A**	0.21	0.14	0.1	–
BN 63B	**M05B**	0.3	0.21	0.14	–
BN 63C	**M05C**	0.45	0.3	–	–
BN 71A	**–**	0.45	0.3	0.21	0.1
–	**M1SC**	–	–	0.21	–
BN 71B	**M05SD**	0.65	0.45	0.3	0.14
BN 71C	**M1LA**	0.9	0.65	0.45	–
BN 80A	**–**	0.9	0.65	0.45	0.21
BN 80B	**M2SA**	1.3	0.9	0.65	0.30
BN 80C	**M2SB**	1.8	1.3	0.9	–
BN 90S		–	1.3	0.9	0.45
BN 90SA	**–**	1.8	–	–	–
BN 90SB		2.2	–	–	–
BN 90L	**M3SA**	2.5	–	1.3	0.65
BN 90LA		–	1.8	–	–
BN 90LB	**–**	–	2.2	–	–

		P_n [kW]			
		2P	4P	6P	8P (*)
BN 100L	**M3LA**	3.5	–	–	–
BN 100LA		–	2.5	1.8	0.9
BN 100LB	**M3LB**	4.7	3.5	2.2	1.3
BN 112M	**–**	4.7	4.7	2.5	1.8
–	**M3LC**	–	4.7	2.5	–
BN 132S	**M4SA**	–	6.5	3.5	2.5
BN 132SA		6.5	–	–	–
BN 132SB	**M4SB**	8.7	–	–	–
BN 132M	**M4LA**	11	–	–	3.5
BN 132MA		–	8.7	4.6	–
BN 132MB	**M4LB**	–	11	6.5	–
BN 160MR	**M4LC**	12.5	12.5	–	–
BN 160M	**M5SA**	–	–	8.6	–
BN 160MB	**–**	17.5	–	–	–
–	**M5SB**	17.5	17.5	–	–
BN 160L	**–**	21.5	17.5	12.6	–
–	**M5SC**	21.5	–	–	–
BN 180M	**M5LA**	24.5	21.5	–	–
BN 180L	**–**	–	25.3	17.5	–
BN 200L	**–**	–	34	–	–
BN 200LA	**–**	34	–	22	–

(*) Excluded M_ motors

Double speed BN / M motors supplied at 60 Hz will have an increase of nominal power, referred to 50 Hz, equal to 15%.
If a nominal power rating, equal to the normalised nominal power rating at 50 Hz, was requested to be on a nameplate of a motor meant to be voltage supplied at 60 Hz, the PN option shall be specified on the motor designation.
Motors normally designed for a 50 Hz frequency may be used on a 60 Hz operating grid, but the related data shall be updated according to the following table.
Motors designated for 50 Hz operation show on the nameplate also the values for 60 Hz operation (excluding motors in CUS execution and brake motors). See the following table.

(F 17)

50 Hz	**60 Hz**			
V - 50 Hz	**V** - 60 Hz	**Pn** - 60 Hz	M_n, M_a/M_n - 60 Hz	**n** [min^{-1}] - 60 Hz
230/400 Δ/Y	220 - 240 Δ	1	0.83	1.2
	380 - 415 Y			
400/690 Δ/Y	380 - 415 Δ			
230/400 Δ/Y	265 - 280 Δ	1.15	1	1.2
	440 - 480 Y			
400/690 Δ/Y	440 - 480 Δ			

M4.3 Ambient temperature

Catalogue rating values are calculated for 50 Hz operation and for standard ambient conditions (temperature 40 °C; elevation <1000 m a.s.l.) as per the CEI EN 60034-1 Standards.
The motors can be used within the 40 - 60 °C temperature range with rated power output adjusted by factors given in the following charts.

(F 18)

Ambient temperature (°C)	40°	45°	50°	55°	60°
Permitted power as a % of rated power	100%	95%	90%	85%	80%

Should a derating factor higher than 15% apply please consult factory.

M4.4 Insulation class

CL F

Bonfiglioli motors use class **F** insulating materials (enamelled wire, insulators, impregnation resins) as compare to the standard motor.

CL H

Motors manufactured in insulation class **H** are available at request.
In standard motors, stator windings over temperature normally stays below the 80 K limit corresponding to class B over temperature.
A careful selection of insulating components makes the motors compatible with tropical climates and normal vibration.
For applications involving the presence of aggressive chemicals or high humidity, contact Bonfiglioli Engineering for assistance with product selection.
Not available for motors in compliance with CSA e UL standards (CUS option).

(F 19)

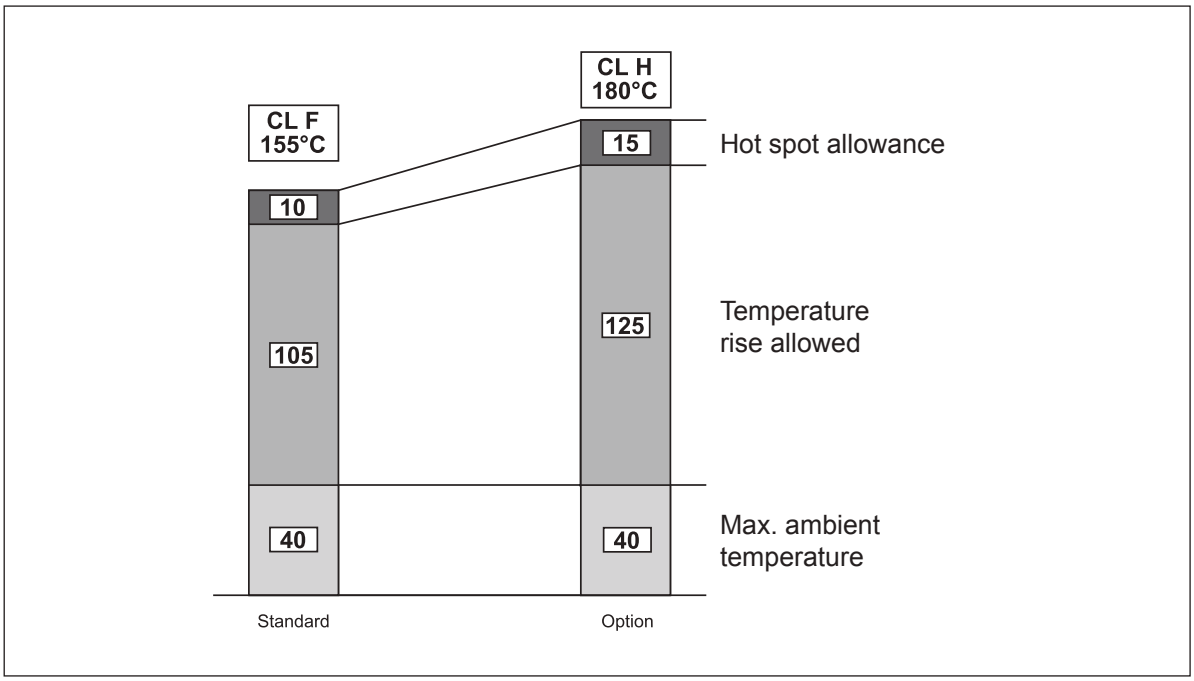

M4.5 Type of duty

Unless otherwise specified, catalogue motor power refers to continuous duty S1.
Any operating conditions other than S1 duty must be identified in accordance with duty cycle definitions laid down in standards CEI EN 60034-1.
For duty cycles S2 and S3, the power increase co-efficient reported in the following table may be used. Please note that the table provided below applies to single-speed motors.
As an alternative to S1 continuous duty, one of the following values can be specified at the product configuration stage: S2, S3 or S9. The motor nameplate will be marked with an increased power rating to suit the type of duty, and with specific electrical data and a duty type of S2-30 min, S3-70% or S9 respectively.
For further details, contact Bonfiglioli's Technical Service.
Please contact Bonfiglioli Engineering for the power increase coefficients applicable to switch-pole motors.
(F 20)

	Duty						
	S2			**S3 ***			**S4 - S9**
	Cycle duration (min)			Cyclic duration factor (I)			Consult factory
	10	**30 (*)**	**60**	**25%**	**40%**	**70% (*)**	
f_m	1.35	1.15	1.05	1.25	1.15	1.1	

* Cycle duration must, in any event, be equal to or less than 10 minutes; if this time is exceeded, please contact our Technical Service.
(*) Default values from options.

M4.5.1 Cyclic duration factor:

$$I = \frac{t_f}{t_f + t_r} \cdot 100 \qquad (23)$$

t_f = work time under constant load
t_r = rest time

M4.5.2 Limited duration duty S2

This type of duty is characterized by operation at constant load for a limited time, which is shorter than the time required to reach thermal equilibrium, followed by a rest period of sufficient duration to restore ambient temperature in the motor.

M4.5.3 Periodical intermittent duty S3:

This type of duty is characterized by a sequence of identical operation cycles, each including a constant load operation period and a rest period.
For this type of duty, the starting current does not significantly influence overtemperature.

M4.6 Inverter-controlled motors

The electric motors of series BN and M may be used in combination with PWM inverters with rated voltage at transformer input up to 500 V.Standard motors use a phase insulating system with separators, class 2 enamelled wire and class H impregnation resins (1600V peak-to-peak voltage pulse capacity and rise edge t_s > 0.1µs at motor terminals). The following table shows the typical torque/ speed curves referred to S1 duty for motors with base frequency f_b = 50 Hz.
Because ventilation is somewhat impaired in operation at lower frequencies (about 30 Hz), standard motors with incorporated fan (IC411) require adequate torque derating or - alternately - the addition of a separate supply fan cooling.
Above base frequency, upon reaching the maximum output voltage of the inverter, the motor enters a steady-power field of operation, and shaft torque drops with ratio (f/f_b).
As motor maximum torque decreases with $(f/f_b)^2$, the allowed overloading must be reduced progressively.

(F 21)

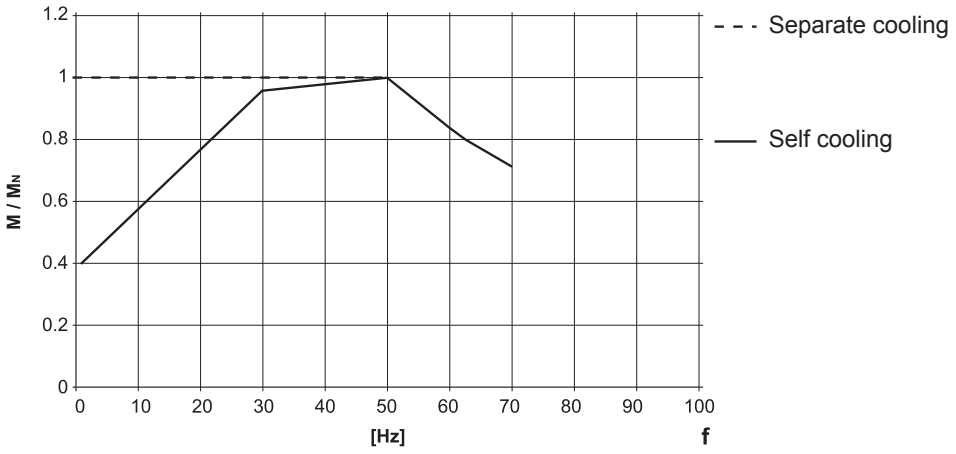

The following table reports the mechanical limit speed for motor operation above rated frequency:

(F 22)

		n [min^{-1}]		
		2p	**4p**	**6p**
≤ BN 112	**M05…M3**	5200	4000	3000
≥ BN 132	**M4, M5**	4500	4000	3000

Above rated speed, motors generate increased mechanical vibration and fan noise. Class B rotor balancing is highly recommended in these applications. Installing a separate supply fan cooling may also be advisable.

Remote-controlled fan and brake (if fitted) must always be connected direct to mains power supply.

M4.7 Permissible starts per hour, Z

The rating charts of brakemotors lend the permitted number of starts Z_0, based on 50% intermittence and for unloaded operation.
The catalogue value represents the maximum number of starts per hour for the motor without exceeding the rated temperature for the insulation class F.
To give a practical example for an application characterized by inertia J_c, drawing power P_r and requiring mean torque at start-up M_L the actual number of starts per hour for the motor can be calculated approximately through the following equation:

$$Z = \frac{Z_0 \cdot K_c \cdot K_d}{K_J} \qquad (24)$$

where:

$K_J = \frac{J_m + J_c}{J_m}$	inertia factor
$K_c = \frac{M_a - M_L}{M_a}$	torque factor
$K_d =$	load factor see table (F23)

(F 23)

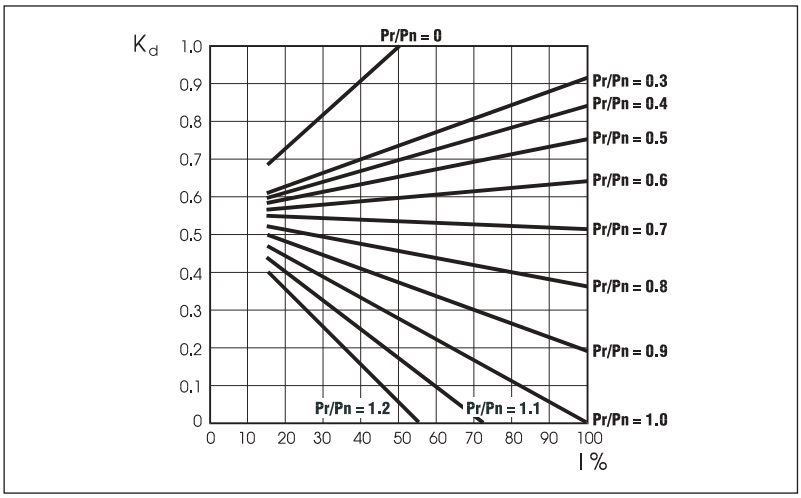

If actual starts per hour is within permitted value (Z) it may be worth checking that braking work is compatible with brake (thermal) capacity W_{max} also given in tables (F30), (F38) and dependent on the number of switches (c/h).

M5 ASYNCHRONOUS BRAKE MOTORS

M5.1 Operation

Versions with incorporated brake use spring-applied DC (FD option) or AC (FA options) brakes.
All brakes are designed to provide fail-safe operation, meaning that they are applied by spring-action in the event of power failure.

(F 24)

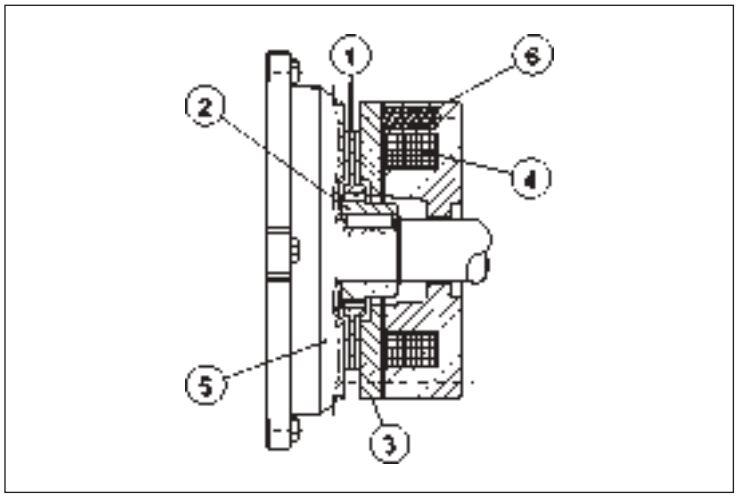

Key:
① brake disc
② disc carrier
③ pressure plate
④ brake coil
⑤ motor rear shield
⑥ brake springs

When voltage is interrupted, pressure springs push the armature plate against the brake disc. The disc becomes trapped between the armature plate and motor shield and stops the shaft from rotation. When the coil is energized, a magnetic field strong enough to overcome spring action attracts the armature plate, so that the brake disc – which is integral with the motor shaft – is released.

M5.2 Most significant features

- High braking torques (normally $M_b \approx 2$ Mn), braking torque adjustment.
- Steel brake disc with double friction lining (low-wear, asbestos-free lining).
- Hexagonal seat on motor shaft fan end (N.D.E.) for manual rotation (not compatible with options PS, RC, TC, U1, U2, EN1, EN2, EN3, EN4, EN5, EN6).
- Manual release lever (options **R** and **RM** for BN/M_FD; option **R** for BN/M_FA).
- Corrosion-proof treatment on all brake surfaces.
- Insulation class F.

M6 DC BRAKE MOTORS TYPE BN_FD and M_FD

Frame sizes: BN 63 … BN 200L / M05 ... M5

(F 25)

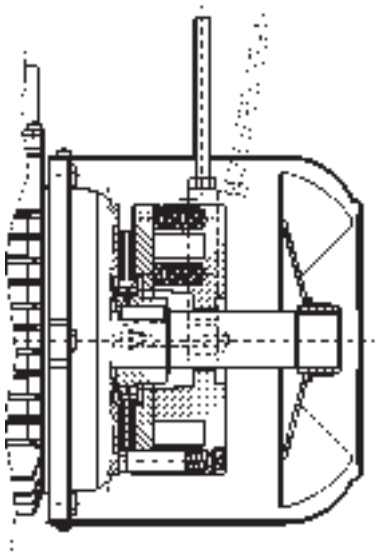

IP 54

(F 26)

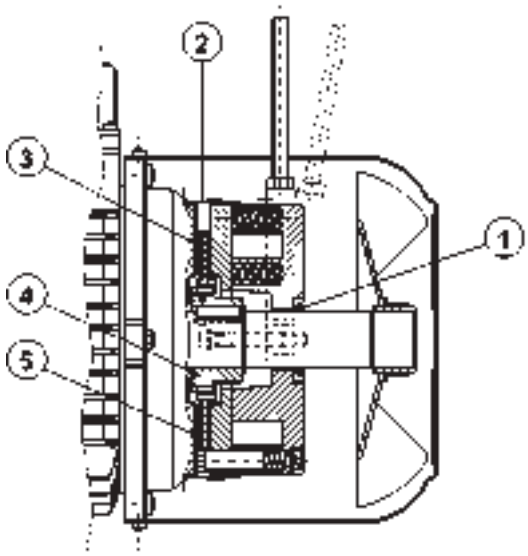

IP 55

Direct current toroidal-coil electromagnetic brake bolted onto motor shield. Preloading springs provide axial positioning of magnet body.
Brake disc slides axially on steel hub shrunk onto motor shaft with anti-vibration device.
Brake torque factory setting is indicated in the corresponding motor rating charts. Braking torque may be modified by changing the type and/or number of springs.
At request, motors may be equipped with manual release lever with automatic return (**R**) or system for holding brake in the released position (**RM**).
See variant at paragraph “BRAKE RELEASE SYSTEMS” for available release lever locations.
FD brakes ensure excellent dynamic performance with low noise. DC brake operating characteristics may be optimized to meet application requirements by choosing from the various rectifier/power supply and wiring connection options available.
For applications involving lifting and/or high hourly energy dissipation, contact Bonfiglioli’s Technical Service.

M6.1 Degree of protection

Standard protection class is IP54.
Brake motor FD is also available in protection class **IP55**, which mandates the following variants:

① V-ring at N.D.E. of motor shaft
② dust and water-proof rubber boot
③ stainless steel ring placed between motor shieldand brake disc
④ stainless steel hub
⑤ stainless steel brake disc

M6.2 FD brake power supply

A rectifier accommodated inside the terminal box feeds the DC brake coil. Wiring connection across rectifier and brake coil is performed at the factory.
On all single-pole motors, rectifier is connected to the motor terminal board.
Rectifier standard power supply voltage VB is as indicated in the following table, regardless of mains frequency:

(F 27)

2, 4, 6 P					**1 speed**
		BN_FD / M_FD		brake connected to terminal board power supply	separate power supply
		V_{mot} ± 10% 3 ~	V_B ± 10% 1 ~		
BN 63…BN 132	**M05...M4LB**	230/400 V – 50 Hz	230 V	standard	specify **V_B SA** o **V_B SD**
BN 160…BN 200	**M4LC...M5**	400/690 V – 50 Hz	400 V	standard	specify **V_B SA** o **V_B SD**

Switch-pole motors feature a separate power supply line for the brake with rectifier input voltage V_B as indicated in the table below:

(F 28)

2/4, 2/6, 2/8, 2/12, 4/6, 4/8 P					**2 speed**
		BN_FD / M_FD		brake connected to terminal board power supply	separate power supply
		V_{mot} ± 10% 3 ~	V_B ± 10% 1 ~		
BN 63…BN 132	**M05...M4LB**	400 V – 50 Hz	230 V	⛔	specify **V_B SA** o **V_B SD**

The diode half-wave rectifier (VDC ≈ 0,45 x VAC) is available in versions **NB, SB, NBR** e **SBR**, as detailed in the table below:

(F 29)

		brake	standard	at request
BN 63	**M05**	**FD 02**	**NB** 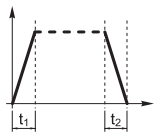	**SB** 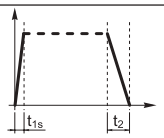
BN 71	**M1**	**FD 03** **FD 53**		
BN 80	**M2**	**FD 04**		**SBR** 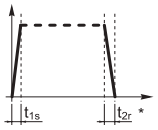
BN 90S	**—**	**FD 14**		
BN 90L	**—**	**FD 05**		**NBR** 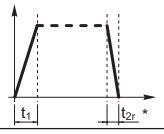
BN 100	**M3**	**FD 15**		
—		**FD 55**	**SB** 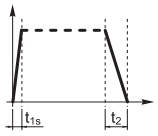	**SBR** 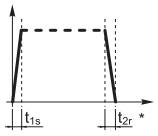
BN 112	**—**	**FD 06S**		
BN 132 - BN 160MR	**M4**	**FD 56** **FD 06** **FD 07**		
BN 160L - BN 180M	**M5**	**FD 08**		
BN 180L - BN 200M	**—**	**FD 09**		

(*) $t_{2c} < t_{2r} < t_2$

Bonfiglioli Riduttori

Rectifier **SB** with electronic energizing control over-energizes the electromagnet upon power-up to cut brake release response time and then switches to normal half-wave operation once the brake has been released.

Use of the **SB** rectifier is mandatory in the event of:
- high number of operations per hour
- reduced brake release response time
- brake is exposed to extreme thermal stress

Rectifiers **NBR** or **SBR** are available for applications requiring quick brake intervention (braking condition reinstatement) response.
These rectifiers complement the **NB** and **SB** types as their electronic circuit incorporates a static switch that de-energizes the brake quickly in the event voltage is missing.
This arrangement ensures short brake release response time with no need for additional external wiring and contacts.
Optimum performance of rectifiers **NBR** and **SBR** is achieved with separate brake power supply.
Versions available: 230Vac ±10%, 400Vac ± 10%, 50/60 Hz (with power supply); 100Vdc ±10%, 180Vdc ± 10% (with SD option).

M6.3 FD brake technical specifications

The table below reports the technical specifications of DC brakes FD.

(F 30)

Brake	Brake torque M_b [Nm] springs			Release		Braking		W_{max} per brake operation [J]			W	P
	6	4	2	t_1 [ms]	t_{1s} [ms]	t_2 [ms]	t_{2c} [ms]	10 s/h	100 s/h	1000 s/h	[MJ]	[W]
FD02	–	3.5	1.75	30	15	80	9	4500	1400	180	15	17
FD03	5	3.5	1.75	50	20	100	12	7000	1900	230	25	24
FD53	7.5	5	2.5	60	30	100	12					
FD04	15	10	5	80	35	140	15	10000	3100	350	30	33
FD14												
FD05	40	26	13	130	65	170	20	18000	4500	500	50	45
FD15	40	26	13	130	65	170	20					
FD55	55	37	18	–	65	170	20					
FD06S	60	40	20	–	80	220	25	20000	4800	550	70	55
FD56	–	75	37	–	90	250	20	29000	7400	800	80	65
FD06		100	50		100	250	20					
FD07	150	100	50	–	120	200	25	40000	9300	1000	130	65
FD08*	250	200	170	–	140	350	30	60000	14000	1500	230	100
FD09**	400	300	200	–	200	450	40	70000	15000	1700	230	120

* brake torque values obtained with 9, 7 and 6 springs, respectively

** brake torque values obtained with 12, 9 and 6 springs, respectively

t_1 = brake release time with half-wave rectifier
t_{1s} = brake release time with over-energizing rectifier
t_2 = brake engagement time with AC line interruption and separate power supply
t_{2c} = brake engagement time with AC and DC line interruption – Values for t1, t1s, t2, t2c indicated in the tab. (F30) are referred to brake set at maximum torque, medium air gap and rated voltage
W_{max} = max energy per brake operation
W = braking energy between two successive air gap adjustments
P_b = brake power absorption at 20 °C
M_b = static braking torque (±15%)
s/h = starts per hour

The brake pad wear depends on the operating/ambient conditions (temperature, humidity, angular speed, specifica pressure); Therefore the declared wear rate must be considered as indicative.

M6.4 FD brake connections

On standard single-pole motors, the rectifier is connected to the motor terminal board at the factory. For switch-pole motors and where a separate brake power supply is required, connection to rectifier must comply with brake voltage VB stated in motor name plate.
Because the load is of the inductive type, brake control and DC line interruption must use contacts from the usage class AC-3 to IEC 60947-4-1.

Table (F31) – Brake power supply from motor terminals and AC line interruption
Delayed stop time t_2 and function of motor time constants.
Mandatory when soft-start/stops are required.
Table (F32) – Brake coil with separate power supply and AC line interruption
Normal stop time independent of motor.
Achieved stop times t_2 are indicated in the table (F30).
Table (F33) – Brake coil power supply from motor terminals and AC/DC line interruption.
Quick stop with operation times t_{2c} as per table (F30).
Table (F34) – Brake coil with separate power supply and AC/DC line interruption.
Stop time decreases by values t_{2c} indicated in the table (F30).

The brake may be voltage supplied directly from the motor terminal box (from tab. F31 to tab. F34) only if the nominal voltage of the brake is the same as the smaller voltage of the motor.

(F 31)

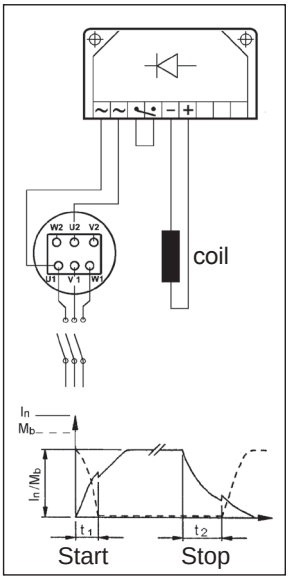

(F 32)

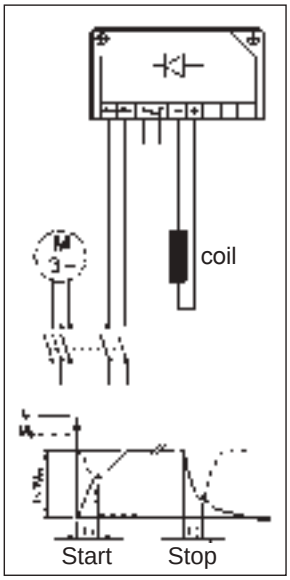

(F 33)

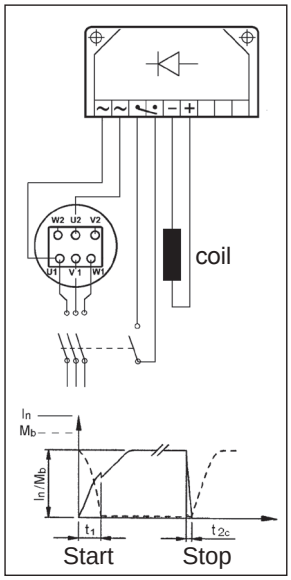

(F 34)

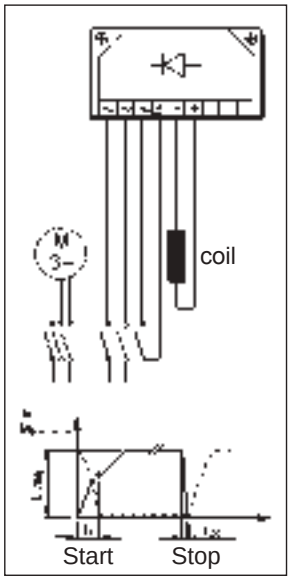

M7 AC BRAKE MOTORS TYPE BN_FA and M_FA

Frame sizes: BN 63 … BN 180M / M05 ... M5

(F 35)

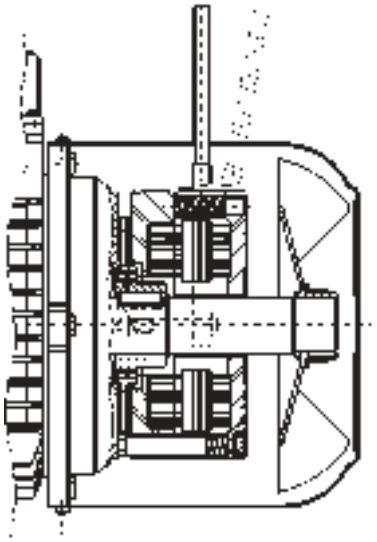

IP 54

(F 36)

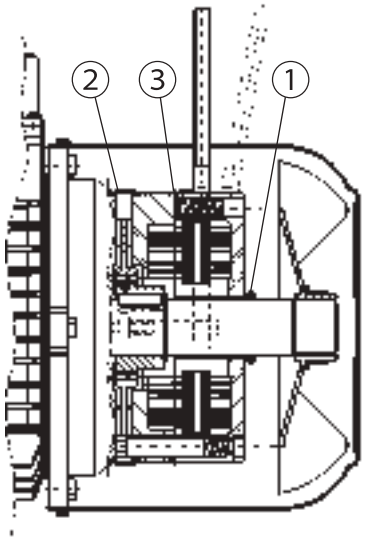

IP 55

Electromagnetic brake operates from three-phase **alternated current** power supply and is bolted onto conveyor shield. Preloading springs provide axial positioning of magnet body.
Steel brake disc slides axially on steel hub shrunk onto motor shaft with anti-vibration device.
Brake torque factory setting is indicated in the corresponding motor rating charts.
Spring preloading screws provide stepless braking torque adjustment.
Torque adjustment range is 30% $M_{bMAX} < M_b < M_{bMAX}$ (where M_{bMAX} is maximum braking torque as shown in tab. (F38).
Thanks to their high dynamic characteristics, FA brakes are ideal for heavy-duty applications as well as applications requiring frequent stop/starts and very fast response time.
Motors may be equipped with manual release lever with automatic return (**R**) at request. See variant at paragraph “BRAKE RELEASE SYSTEMS” for available release lever locations.
For applications involving lifting and/or high hourly energy dissipation, contact Bonfiglioli’s Technical Service.

M7.1 Degree of protection

Standard protection class is IP54.
Brake motor FA is also available in protection class **IP55**, which mandates the following variants:

① V-ring at N.D.E. of motor shaft
② dust and water-proof rubber boot
③ O-ring

M7.2 FA brake power supply

In single speed motors, power supply is brought to the brake coil direct from the motor terminal box. As a result, brake voltage and motor voltage are the same. In this case, brake voltage indication may be omitted in the designation.
Switch-pole motors and motors with separate brake power supply feature an auxiliary terminal board with 6 terminals for connection to brake line. In both cases, brake voltage indication in the designation is mandatory.
The following table reports standard AC brake power supply ratings for single- and switch-pole motors:
(F 37)

	BN 63…BN 132	BN 160…BN 180
single-pole motor	**M05...M4LB**	**M4LC...M5**
	230Δ / 400Y V ±10% – 50 Hz	400Δ/ 690Y V ±10% – 50 Hz
	265Δ / 460Y ±10% - 60 Hz	460Y – 60 Hz

	BN 63…BN 132
switch-pole motors (separate power supply line)	**M05...M4**
	230Δ / 400Y V ±10% – 50 Hz
	460Y - 60 Hz

Unless otherwise specified, standard brake power supply is 230Δ /400Y V - 50 Hz.

Special voltages in the 24…690 V, 50-60 Hz range are available at request.

M7.3 Technical specifications of FA brakes

(F 38)

Brake	Brake torque M_b [Nm]	Release t_1 [ms]	Braking t_2 [ms]	W_{max} [J] 10 s/h	100 s/h	1000 s/h	W [MJ]	P [VA]
FA 02	3.5	4	20	4500	1400	180	15	60
FA 03	7.5	4	40	7000	1900	230	25	80
FA 04	15	6	60	10000	3100	350	30	110
FA 14								
FA 05	40	8	90	18000	4500	500	50	250
FA 15								
FA 06S	60	16	120	20000	4800	550	70	470
FA 06	75	16	140	29000	7400	800	80	550
FA 07	150	16	180	40000	9300	1000	130	600
FA 08	250	20	200	60000	14000	1500	230	1200

M_b = max static braking torque (±15%)
t_1 = brake release time
t_2 = brake engagement time
W_{max} = max energy per brake operation (brake thermal capacity)
W = braking energy between two successive air gap adjustments
P_b = power drawn by brake at 20° (50 Hz)
s/h = starts per hour

NOTE
Values t_1 and t_2 in the table refer to a brake set at rated torque, medium air gap and rated voltage.

Bonfiglioli Riduttori

The brake pad wear depends on the operating/ambient conditions (temperature, humidity, angular speed, specifica pressure); Therefore the declared wear rate must be considered as indicative.

M7.4 FA brake connections

The diagram below shows the wiring when brake is connected directly to same power supply of the motor:

(F 39)

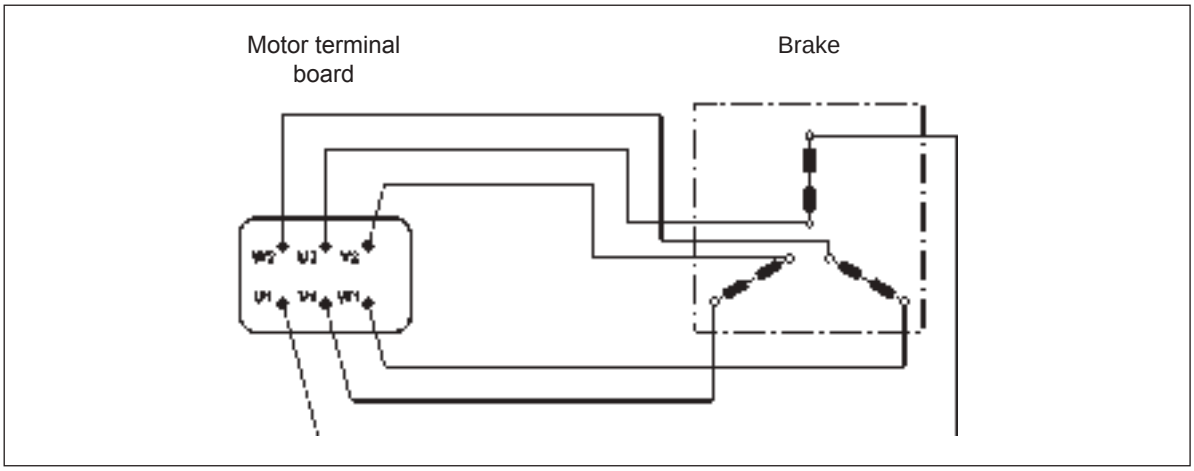

Switch-pole motors and, at request, single-pole motors with separate power supply are equipped with an auxiliary terminal board with 6 terminals for brake connection.
In this version, motors feature a larger terminal box. See diagram below:

(F 40)

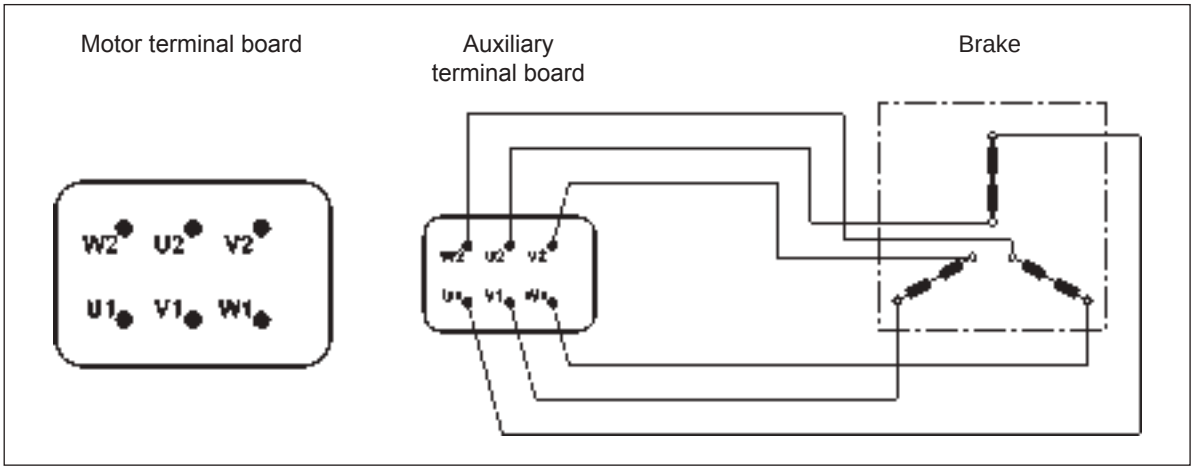

M8 BRAKE RELEASE SYSTEMS

Spring-applied brakes type FD and FA may be equipped with optional manual release devices. These are typically used for manually releasing the brake before servicing any machine or plant parts operated by the motor.

R

(F 41)

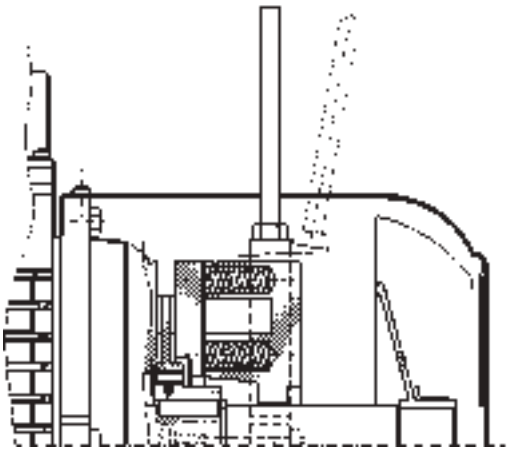

A return spring brings the release lever back in the original position.

RM

(F 42)

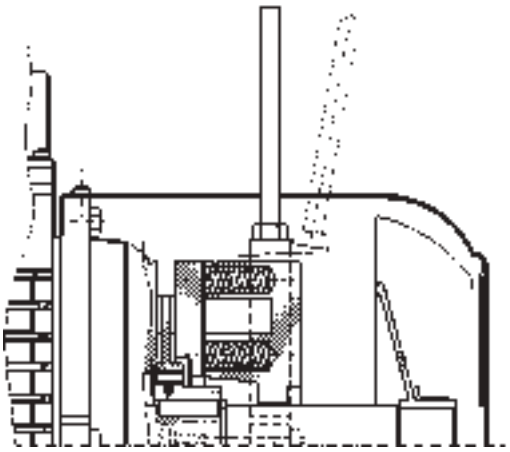

On brake motors type FD, if the option RM is specified, the release device may be locked in the ”release” position by tightening the lever until its end becomes engaged with a brake housing projection. The availability for the various disengagement devices is charted here below:

(F 43)

	R	RM
BN_FD	BN 63...BN 200	2p 63A2 ≤ H ≤ 132M2 4p 63A4 ≤ H ≤ 132MA4 6p 63A6 ≤ H ≤ 132MA6
M_FD	M 05...M 5	M 05...M 4LA
BN_FA	BN 63...BN 180M	⊖
M_FA	M 05...M 5	

M8.1 Release lever orientation

Unless otherwise specified, the release lever is located 90° away from the terminal box – identified by letters [**AB**] in the diagram below – in a clockwise direction on both options **R** and **RM**.
Alternative lever positions [**AA**], [**AC**] and [**AD**] are also possible when the corresponding option is specified:

(F 44)

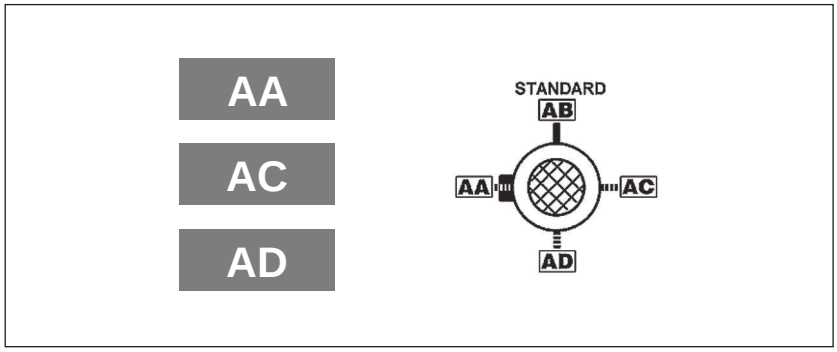

M8.2 Separate brake supply

...SA

The brake coil is directly fed through an independent line, separately from the motor.
In this case the rated voltage for the coil must be specified, e.g.230SA. The option is applicable to all motors with brake type FD and FA.

...SD

The brake coil is directly fed with DC current and the rectifier is out of the scope for supply.
The rated voltage for the coil must be specified, e.g. 24SD.

M8.3 Fly-wheel data (F1)

The table below shows values of weight and inertia of flywheel (option F1). Overall dimensions of motors remain unchanged.

(F 45)

Main data for flywheel of motore type: BN_FD, M_FD			
		Fly-wheel weight [Kg]	**Fly-wheel inertia** [Kgm^2]
BN 63	**M05**	0.69	0.00063
BN 71	**M1**	1.13	0.00135
BN 80	**M2**	1.67	0.00270
BN 90 S - BN 90 L	**–**	2.51	0.00530
BN 100	**M3**	3.48	0.00840
BN 112	**–**	4.82	0.01483
BN 132 S - BN 132 M	**M4**	6.19	0.02580

M9 OPTIONS

M9.1 Thermal protective devices

In addition to the standard protection provided by the magneto-thermal device, motors can be supplied with built-in thermal probes to protect the winding against overheating caused, by insufficient ventilation or by an intermittent duty.
This additional protection should always be specified for servoventilated motors (IC416).

M9.2 Capacitive filter

CF

An optional capacitive filter is available for brake motors type FD only. When the suitable capacitive filter is installed upstream of the rectifier (option CF), motors comply with the emission limits required by standard EN61000-6-3:2007“ Electromagnetic Compatibility – Generic Emission Standard – Part 6-3: Residential, commercial and light industrial environment”.

M9.3 Thermistors

E3

These are semi-conductors having rapid resistance variation when they are close to the rated switch off temperature (150 °C).
Variations of the R = f(T) characteristic are specified under DIN 44081, IEC 34-11 Standards.
Positive temperature coefficient thermistors are normally used (also known as PTC “cold conductor resistors”).
Thermistors cannot control relays directly and must be connected to a suitable disconnect device.
Thus protected, three PTCs connected in series are installed in the winding, the terminals of which are located on the auxiliary terminal-board.

K1

The design characteristics of this sub-group of PTC thermistors allow them to be used as positive temperature coefficient sensors with variable resistance.
Functioning temperature range: 0°C ... +260°C.
Thermistors cannot control relays directly and must be connected to a suitable disconnect device.
Terminals (polarised) for 1 x KTY 84-130 are provided on an auxiliary terminal strip.

Bonfiglioli Riduttori

M9.4 Bimetallic thermostates

D3

These types of protective devices house a bimetal disk. When the rated switch off temperature (150 °C) is reached, the disk switches the contacts from their initial rest position.
As temperature falls, the disk and the contacts automatically return to rest position.
Three bimetallic thermostates connected in series are usually employed, with normally closed contacts. The terminals are located on an auxiliary terminal-board.

M9.5 Plug connector

CON

Three types of connectors (CON 1, CON 2, CON 3) are provided; they can be mounted in two different positions: right side of terminal box cover (C1D, C2D, C3D); left side of terminal box cover (C1S, C2S, C3S).
The option CON is applicable to single speed BN and M motors (2, 4, 6, 8 poles), and it is not applicable to switch-pole motors. More details about the motor sizes are available in the next table.
The connectors CON 1 / CON 2 are available for BN and M motors without brake and for brakemotors equipped with DC brake type FD, for the motor sizes listed below.
The male connector (with pins) is mounted on the motor, the female connector is not provided. With CON option, the winding connection is always Y.
With option U1 “forced ventilation”, the fan unit supply is available inside the separate terminal box fixed to fan cover.
With options EN1...EN6, the encoder connection is made by a cable not connected to the motor plug connector.
The CON option is not applicable to brakemotors equipped with AC brake type FA. The CON option is not available when at least one of the next options are selected: the U2, CUS, IC.

Specifications

(F 46)

Option	**CON 1**
Motor size	**BN63…BN112 / M05...M3**
Connector view	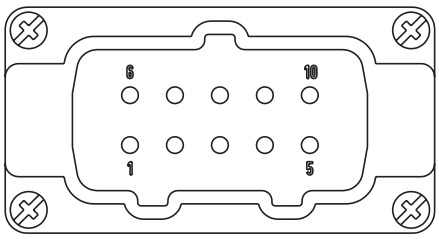
Type of connector	Harting Han 10ES
Housing	Han EMC 10B with 2 levers
Numbers of pins - nominal current	10 x 16A
Voltage	500 Vac
Contact connection	Screw terminals

(F 47)

Option	CON 2
Motor size	**BN63…BN160MR / M05...M4L**
Connector view	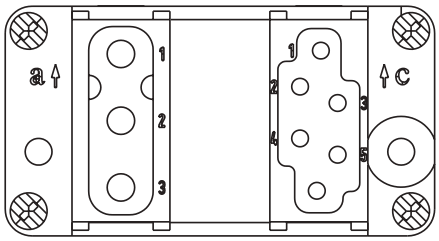
Type of connector	Harting Han Modular
Housing	Han EMC 10B with 2 levers
Module type	Module C + Empty module + Module E
Numbers of pins - nominal current	3 x 36A / 6 x 16A
Voltage	500 Vac
Contact connection	Crimping contacts

(F 48)

Option	CON 3
Motor size	**BN63…BN160M / M05...M4L**
Connector view	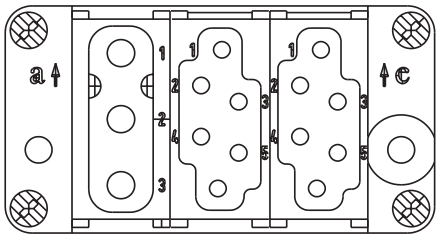
Type of connector	Harting Han Modular
Housing	Han EMC 10B with 2 levers
Module type	Module C + Module E + Module E
Numbers of pins - nominal current	3 x 36A / 6 + 6 x 16A
Voltage	500 Vac
Contact connection	Crimping contacts

(F 49)

Connector orientation
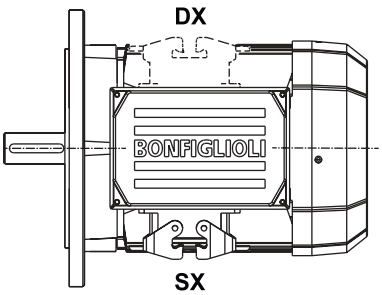

(F 50)

Motors without brake dimensions

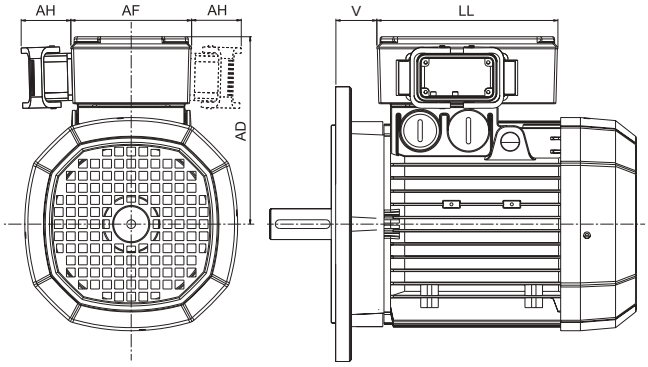

		AD (mm)	**AF** (mm)	**AH** (mm)	**LL** (mm)	**V**(*) (mm)
BN63	**M05**	136	110	45	165	4.5
BN71	**M1**	149	110	45	165	15.5
BN80	**M2**	160	110	45	165	16.5
BN90	**—**	162	110	45	165	31.5
BN100	**M3**	171	110	45	165	37.5
BN112	**—**	186	110	45	165	39
BN132	**M4**	210	140	45	188	45.5
BN160MR	**—**	210	140	45	188	161

(*) Dimension valid only for motors BN.

(F 51)

Motors with FD brake dimensions

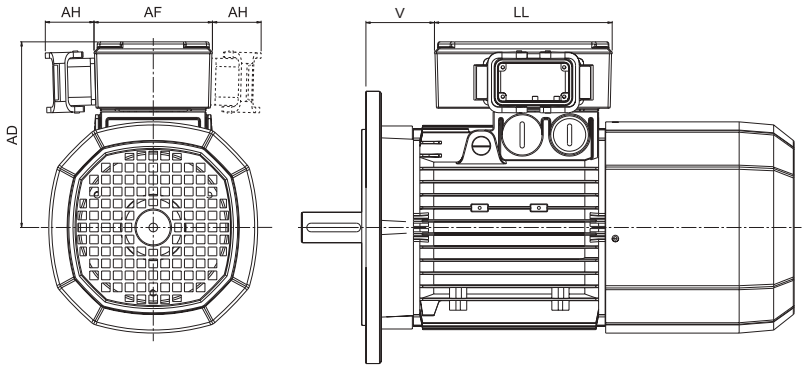

		AD (mm)	**AF** (mm)	**AH** (mm)	**LL** (mm)	**V**(*) (mm)
BN63	**M05**	136	110	45	165	4.5
BN71	**M1**	149	110	45	165	1.5
BN80	**M2**	160	110	45	165	18.5
BN90	**—**	162	110	45	165	39.5
BN100	**M3**	171	110	45	165	63.5
BN112	**—**	186	110	45	165	75
BN132	**M4**	210	140	45	188	122
BN160MR	**—**	210	140	45	188	161

(*) Dimension valid only for motors BN.

M9.6 Control of brake operation

MSW

The microswitch can be set in order to obtain from it a signal related to the attraction/release of anchor plate, or it can be set in order to give feedback when the air gap reaches the maximum value.
MSW option is available for brakes FD03...FD09.
The microswitch is provided with three lead wires (NC, NO, COM). The next figure shown the main components of the brake equipped with microswitch.

(F 52)

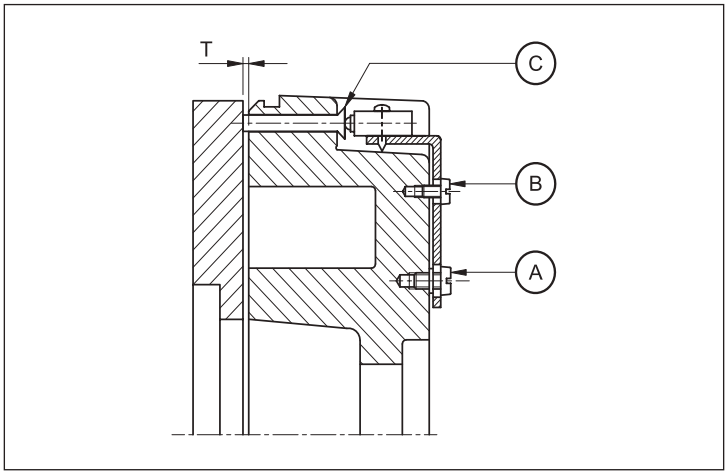

A: Plate fixing screws
B: Setting screws
C: Actuator control pin

M9.7 Additional cable entry for brakemotors

IC

The terminal box cover of brakemotors BN63...BN160MR / M05...M4 is provided with two additional cable entry M16 x 1.5 (one cable entry per side).
The terminal box cover of brakemotors BN160...BN200 / M5 is provided with an additional cable entry M16 x 1.5 next to the cable entry used for the brake.

M9.8 Anti-condensation heaters

H1 **NH1**

Where an application involves high humidity or extreme temperature fluctuation, motors may be equipped with an anti-condensate heater.
A single-phase power supply is available in the auxiliary terminal board inside the main terminal box.
Values for the absorbed power are listed here below:

(F 53)

		H1	NH1
		1~ 230V ± 10% P [W]	1~ 115V ± 10% P [W]
BN 56...BN 80	**M0...M2**	10	10
BN 90...BN 160MR	**M3 - M4**	25	25
BN 160M...BN 180M	**M5**	50	50
BN 180L...BN 200L	**—**		

Warning!
Always remove power supply to the anti-condensante hea- ter before operating the motor.

M9.9 Tropicalization

TP

When option **TP** is specified, motor windings receive additional protection for operation in high humidity and temperature conditions.

M9.10 Second shaft extension

PS

This option is not compatible with variants RC, TC, U1, U2, EN1, EN2, EN3, EN4, EN5, EN6.
For shaft dimensions please see motor dimensions tables.

(F 54)

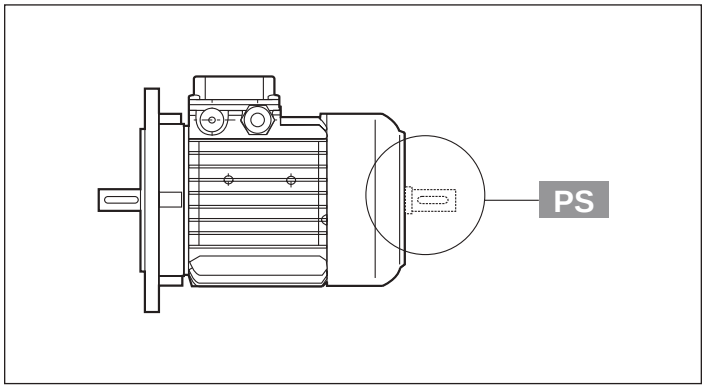

M9.11 Backstop device

AL **AR**

For applications where backdriving must be avoided, motors equipped with an anti run-back device can be used (available for the M series only). While allowing rotation in the direction required, this device operates instantaneously in case of a power failure, preventing the shaft from running back. The anti run-back device is life lubricated with special grease for this specific application. When ordering, customers should indicate the required rotation direction, AL or AR.
Never use the anti run-back device to prevent reverse rotation caused by faulty electrical connection. Table (F55) shows rated and maximum locking torques for the anti run-back devices. A diagram of the device can be seen in Table (F56). Overall dimensis are same as the corresponding brake motor. The direction of free rotation is described in the “MOTOR OPTIONS” section of specifically dedicated sections to gear units.

(F 55)

	Rated locking torque [Nm]	Max. locking torque [Nm]	Release speed [min^{-1}]
M1	6	10	750
M2	16	27	650
M3	54	92	520
M4	110	205	430

(F 56)

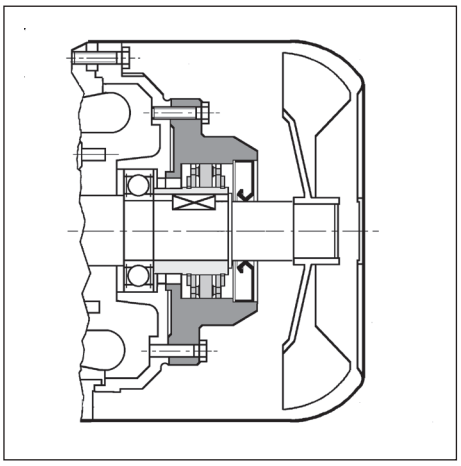

M9.12 Ventilation

Motors are cooled through outer air blow (IC 411 according to CEI EN 60034-6) and are equipped with a plastic radial fan, which operates in both directions.
Ensure that fan cover is installed at a suitable distance from the closest wall so to allow air circulation and servicing of motor and brake, if fitted.
On request, motors can be supplied with independently power-supplied forced ventilation system starting from BN 71 or M1 size.
Motor is cooled by an axial fan with independent power supply and fitted on the fan cover (IC 416 cooling system).
This version is used in case of motor driven by inverter so that steady torque operation is possible even at low speed or when high starting frequencies are needed.
Brake all motors with rear shaft projection (PS option) are excluded.

(F 57)

Power supply					
		V a.c. ± 10%	**Hz**	**P** [W]	**I** [A]
BN 71	**M1**	1~ 230	50 / 60	22	0.12
BN 80	**M2**			22	0.12
BN 90	**—**			40	0.30
BN 100 (*)	**M3**			50	0.25
BN 112	**—**	3~ 230 Δ / 400Y		50	0.26 / 0.15
BN 132S	**M4S**			110	0.38 / 0.22
BN 132M...BN 160MR	**M4L**				
BN 160...BN 180M	**M5**		50	180	1.25 / 0.72

This variant has two different models, called **U1** and **U2**, having the same longitudinal size. Longer side of fan cover (**DL**) is specified for both models in the table below. Overall dimension can be reckoned from motor size table.

(F 58)

Extra length for servoventilated motors			
		Δ L_1	**Δ L_2**
BN 71	**M1**	93	32
BN 80	**M2**	127	55
BN 90	**—**	131	48
BN 100	**M3**	119	28
BN 112	**—**	130	31
BN 132S	**M4S**	161	51
BN 132M	**M4L**	161	51

ΔL_1 = extra length to LB value of corresponding standard motor
ΔL_2 = extra length to LB value of corresponding brake motor

U1

Fan wiring terminals are housed in a separate terminal box.
In brake motors of size BN 71...BN 160MR, M1...M4L, with **U1** model, the release lever cannot be positioned to AA.
The option is not applicable to motors compliant with the CSA and UL norms (option CUS).

U2

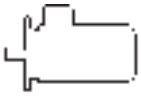

Fan terminals are wired in the motor terminal box.
The **U2** option does not apply to motors BN 160 through BN 200L, M5, with the only exception of motor BN 160MR for which the option is available instead and to motors with option CUS (ompliant to norms CSA and UL).

(F 59)

		V a.c. ±10%	**Hz**	**P** [W]	**I** [A]
BN 71	**M1**	1 ~ 230	50 / 60	22	0.12
BN 80	**M2**			22	0.12
BN 90	–			40	0.30
BN 100	**M3**	3 ~ 230Δ / 400Y		40	0.26 / 0.09
BN 112	–			50	0.26 / 0.15
BN 132 ... BN 160MR	**M4L**			110	0.38 / 0.22

M9.13 Rain canopy

RC

The rain canopy protects the motor from dripping and avoids the ingress of solid bodies. It is recommended when motor is installed in a vertical position with the shaft downwards.
Relevant dimensions are indicated in the table below.
The drip cover is not compatible with variants PS, EN1, EN2, EN3, EN4, EN5, EN6.

(F 60)

		AQ	ΔV	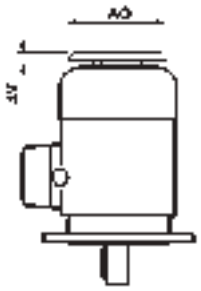
BN 63	**M05**	118	24	
BN 71	**M1**	134	27	
BN 80	**M2**	152	25	
BN 90	**—**	168	30	
BN 100	**M3**	190	28	
BN 112	**—**	211	32	
BN 132...BN 160MR	**M4**	254	32	
BN 160M...BN 180M	**M5**	302	36	
BN 180L...BN 200L	**—**	340	36	

M9.14 Textile canopy

TC

Option TC is a cover variant for textile industry environments, where lint may obstruct the fan grid and prevent a regular flow of cooling air.
This option is not compatible with variants EN1, EN2, EN3, EN4, EN5, EN6.
Overall dimensions are the same as drip cover type RC.

M9.15 Feedback units

Motors may be combined with six different types of encoders to achieve feedback circuits.
Configurations with double-extended shaft (PS) and rain canopy (RC, TC) are not compatible with encoder installation.

EN1

Incremental encoder, V_{IN} = 5 V, line-driver output RS 422.

EN2

Incremental encoder, V_{IN} = 10-30 V, line-driver output RS 422.

EN3

Incremental encoder, V_{IN} = 12-30 V, push-pull output 12-30 V

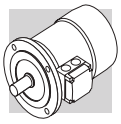

EN4

Encoder sin/cos, V_{IN} = 4.5-5.5 V, output Sinus $0.5V_{PP}$.

EN5

Absolute encoder singleturn, HIPERFACE® interface, V_{IN} = 7-12 V.

EN6

Absolute encoder multiturn, HIPERFACE® interface, V_{IN} = 7-12 V.

(F 61)

		EN1	EN2	EN3	EN4	EN5	EN6
Interface		TTL/RS 422	TTL/RS 422	HTL/push-pull	Sinus 0.5 VPP	HIPERFACE®	HIPERFACE®
Power supply voltage	[V]	4...6	10...30	12...30	4.4...5.5	7...12	7...12
Output voltage	[V]	5	5	12...30	—	—	—
No-load operating current	[mA]	120	100	100	40	80	80
No. of pulses per revolution		1024					
Steps per revolution		—	—	—	—	15 bit	15 bit
Revolutions		—	—	—	—	—	12 bit
No. of signals		6 (A, B, Z + inverted signals)			6 (cos-, cos+, sin-, sin+, Z, $\overline{Z}$)	—	—
Max. output frequency	[kHz]	600			200		
Max. speed	[min^{-1}]	6000 (9000 min^{-1} for 10 s)					
Working temperature range	[°C]	-30 ... +100					
Protection class		IP 65					

(F 63)

EN1, EN2, EN3, EN4, EN5, EN6	
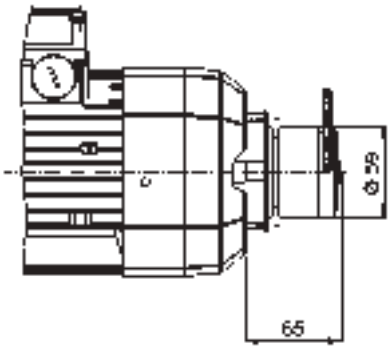	
BN 63...BN 200L	**M05...M5**
BN 63_FD...BN 200L_FD	**M05_FD...M5_FD**
BN 63_FA...BN 200L_FA	**M05_FA...M5_FA**

(F 62)

EN_ + U1		
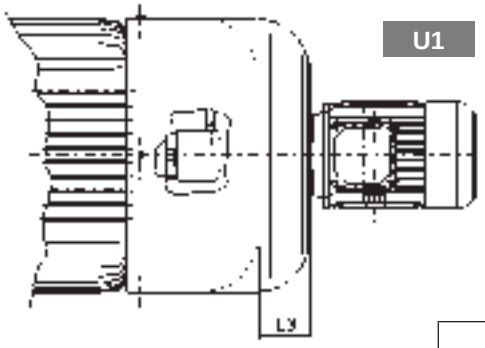		
		L3
BN 160M...BN 180M	**M5**	72
BN 180L...BN 200L	**-**	82
BN 160M_FD...BN 180M_FD	**M5_FD**	35
BN 180L_FD...BN 200L_FD	**-**	41

If the encoder device (option EN_) is specified on motors BN71...BN160MR / M1...M4, along with the independent fan cooling (options U1, U2), the extra length of motor is coincident with that of the correspondent U1 and U2 execution.

M9.16 Surface protection

C_

When no specific protection class is requested, the painted (ferrous) surfaces of motors are protected to at least corrosivity class C2 (UNI EN ISO 12944-2). For improved resistance to atmospheric corrosion, motors can be delivered with C3 and C4 surface protection.

SURFACE PROTECTION	Typical environments	Maximum surface temperature	Corrosivity class according to UNI EN ISO 12944-2
C3	Urban and industrial environments with up to 100% relative humidity (medium air pollution)	120°C	C3
C4	Industrial areas, coastal areas, chemical plant, with up to 100% relative humidity (high air pollution)	120°C	C4

Motors with optional protection to class C3 or C4 are available in a choice of colours. If no specific colour is requested (see the “PAINTING” option) motors are finished in RAL 7042.
Motors can also be supplied with surface protection for corrosivity class C5 according to UNI EN ISO 12944-2. Contact our Technical Service for further details.

M9.17 Painting

RAL_

Gearboxes with optional protection to class C3 or C4 are available in the colours listed in the following table.

PAINTING	Colour	RAL number
RAL7042*	Traffic Grey A	7042
RAL5010	Gentian Blue	5010
RAL9005	Jet Black	9005
RAL9006	White Aluminium	9006
RAL9010	Pure White	9010

* Gearboxes are supplied in this standard colour if no other colour is specified.

NOTE – “PAINTING” options can only be specified in conjunction with “SURFACE PROTECTION” options.

M9.18 Certificates

ACM

Certificate of compliance of motors
The document certifies the compliance of the product with the purchase order and the construction in conformity with the applicable procedures of the Bonfiglioli Quality System.

CC

Inspection certificate
The document entails checking on order compliance, the visual inspection of external conditions and instrumental testing of the electrical characteristics in unloaded conditions. Units inspected are sampled within the shipping batch and marked individually.

2P — 3000 min-1 - S1 — 50 Hz

P_n kW			n min-1	M_n Nm	IE1	η (100%) %	η (75%) %	η (50%) %	cosφ	In 400V A	Is/In	Ms/Mn	Ma/Mn	J_m x 10^{-4} kgm²	IM B5	d.c. brake FD Mod	Mb Nm	Z_o 1/h NB	Z_o 1/h SB	J_m x 10^{-4} kgm²	IM B5	a.c. brake FA Mod	Mb Nm	Z_o 1/h	J_m x 10^{-4} kgm²	IM B5
0.18	BN 63A	2	2730	0.63	○	59.9	56.9	51.9	0.77	0.56	3.0	2.1	2.0	2.0	3.5	FD 02	1.75	3900	4800	2.6	5.2	FA 02	1.75	4800	2.6	5.0
0.25	BN 63B	2	2740	0.87	○	66.0	64.8	64.8	0.76	0.72	3.3	2.3	2.3	2.3	3.9	FD 02	1.75	3900	4800	3.0	5.6	FA 02	1.75	4800	3.0	5.4
0.37	BN 63C	2	2800	1.26	○	69.1	66.8	66.8	0.78	0.99	3.9	2.6	2.6	3.3	5.1	FD 02	3.5	3600	4500	3.9	6.8	FA 02	3.5	4500	3.9	6.6
0.37	BN 71A	2	2820	1.25	○	73.8	73.0	70.6	0.76	0.95	4.8	2.8	2.6	3.5	5.4	FD 03	3.5	3000	4100	4.6	8.1	FA 03	3.5	4200	4.6	7.8
0.55	BN 71B	2	2820	1.86	○	76.0	75.8	74.8	0.76	1.37	5.0	2.9	2.8	4.1	6.2	FD 03	5	2900	4200	5.3	8.9	FA 03	5	4200	5.3	8.6
0.75	BN 71C	2	2810	2.6	○	76.6	76.2	76.2	0.76	1.86	5.1	3.1	2.8	5.0	7.3	FD 03	5	1900	3300	6.1	10.0	FA 03	5	3600	6.1	9.7
0.75	BN 80A	2	2810	2.6	•	76.2	75.5	68.3	0.81	1.75	4.8	2.6	2.2	7.8	8.6	FD 04	5	1700	3200	9.4	12.5	FA 04	5	3200	9.4	12.4
1.1	BN 80B	2	2800	3.8	•	76.4	76.2	75.0	0.81	2.57	4.8	2.8	2.4	9.0	9.5	FD 04	10	1500	3000	10.6	13.4	FA 04	10	3000	10.6	13.3
1.5	BN 80C	2	2800	5.1	•	79.1	79.5	77.2	0.81	3.4	4.9	2.7	2.4	11.4	11.3	FD 04	15	1300	2600	13.0	15.2	FA 04	15	2600	13.0	15.1
1.5	BN 90SA	2	2870	5.0	•	82.0	81.5	78.1	0.80	3.4	5.9	2.7	2.6	12.5	12.3	FD 14	15	900	2200	14.1	16.5	FA 14	15	2200	14.1	16.4
1.85	BN 90SB	2	2880	6.1	•	82.5	82.0	75.4	0.80	4.0	6.2	2.9	2.6	16.7	14	FD 14	15	900	2200	18.3	18.2	FA 14	15	2200	18.3	18.1
2.2	BN 90L	2	2880	7.3	•	82.7	82.1	80.8	0.80	4.8	6.3	2.9	2.7	16.7	14	FD 05	26	900	2200	21	20	FA 05	26	2200	21	20.7
3	BN 100L	2	2860	10.0	•	81.5	81.3	77.4	0.79	6.7	5.6	2.6	2.2	31	20	FD 15	26	700	1600	35	26	FA 15	26	1600	35	27
4	BN 100LB	2	2870	13.3	•	83.1	83.0	77.8	0.80	8.7	5.8	2.7	2.5	39	23	FD 15	40	450	900	43	29	FA 15	40	1000	43	30
4	BN 112M	2	2900	13.2	•	85.5	84.5	83.0	0.82	8.2	6.9	3.0	2.9	57	28	FD 06S	40	—	950	66	39	FA 06S	40	950	66	40
5.5	BN 132SA	2	2890	18.2	•	84.7	84.5	81.2	0.84	11.2	5.9	2.6	2.2	101	35	FD 06	50	—	600	112	48	FA 06	50	600	112	49
7.5	BN 132SB	2	2900	25	•	86.5	86.3	84.4	0.85	14.7	6.4	2.6	2.2	145	42	FD 06	50	—	550	154	55	FA 06	50	550	154	56
9.2	BN 132M	2	2930	30	•	87.0	86.5	83.6	0.86	17.7	6.7	2.8	2.3	178	53	FD 56	75	—	430	189	66	FA 06	75	430	189	67
11	BN 160MR	2	2920	36	•	87.6	87.0	86.0	0.88	20.6	6.9	2.9	2.5	210	65											
15	BN 160MB	2	2930	49	•	89.6	89.4	88.0	0.86	28.1	7.1	2.6	2.3	340	84											
18.5	BN 160L	2	2930	60	•	90.4	90.1	89.0	0.86	34	7.6	2.7	2.3	420	97											
22	BN 180M	2	2930	72	•	89.9	89.7	89.5	0.88	40	7.8	2.6	2.4	490	109											
30	BN 200LA	2	2930	98	•	90.7	90.1	87.6	0.89	54	7.8	2.7	2.9	770	140											

○ = n.a. • = IE1

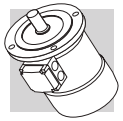

4P — 1500 min-1 - S1 — 50 Hz

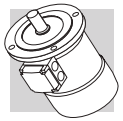

															d.c. brake						a.c. brake				
															FD						FA				
P_n kW			n min-1	M_n Nm	IE1	η (100%) %	η (75%) %	η (50%) %	cosφ	In 400V A	Is/In	Ms/Mn	Ma/Mn	J_m x 10^{-4} kgm²	IM B5	Mod	Mb Nm	Z_o 1/h NB	Z_o 1/h SB	J_m x 10^{-4} kgm²	IM B5	Mod	Mb Nm	Z_o 1/h	J_m x 10^{-4} kgm²	IM B5
0.06	**BN 56A**	**4**	1340	0.43	○	46.8	44.2	41.3	0.65	0.28	2.6	2.3	2.0	1.5	3.1											
0.09	**BN 56B**	**4**	1350	0.64	○	51.7	47.6	42.9	0.60	0.42	2.6	2.5	2.4	1.5	3.1											
0.12	**BN 63A**	**4**	1350	0.85	○	59.8	56.2	47.0	0.62	0.47	2.6	1.9	1.8	2.0	3.5	**FD 02**	1.75	10000	13000	2.6	5.2	**FA 02**	1.75	13000	2.6	5.0
0.18	**BN 63B**	**4**	1320	1.30	○	54.8	52.9	52.5	0.67	0.71	2.6	2.2	2.0	2.3	3.9	**FD 02**	3.5	10000	13000	3.0	5.6	**FA 02**	3.5	13000	3.0	5.4
0.25	**BN 63C**	**4**	1340	1.78	○	65.3	65.0	57.9	0.69	0.80	2.7	2.1	1.9	3.3	5.1	**FD 02**	3.5	7800	10000	3.9	6.8	**FA 02**	3.5	10000	3.9	6.6
0.25	**BN 71A**	**4**	1380	1.73	○	63.7	62.2	59.1	0.73	0.78	3.3	1.9	1.7	5.8	5.1	**FD 03**	3.5	7700	11000	6.9	7.8	**FA 03**	3.5	11000	6.9	7.5
0.37	**BN 71B**	**4**	1370	2.6	○	66.8	66.7	63.0	0.76	1.05	3.7	2.0	1.9	6.9	5.9	**FD 03**	5	6000	9400	8.0	8.6	**FA 03**	5.0	9400	8.0	8.3
0.55	**BN 71C**	**4**	1380	3.8	○	69.0	68.9	68.8	0.74	1.55	4.1	2.3	2.3	9.1	7.3	**FD 53**	7.5	4300	8700	10.2	10.0	**FA 03**	7.5	8700	10.2	9.7
0.55	**BN 80A**	**4**	1390	3.8	○	72.0	71.3	69.7	0.77	1.43	4.1	2.3	2.0	15	8.2	**FD 04**	10	4100	8000	16.6	12.1	**FA 04**	10	8000	16.6	12.0
0.75	**BN 80B**	**4**	1400	5.1	•	75.0	74.5	69.3	0.78	1.85	4.9	2.7	2.5	20	9.9	**FD 04**	15	4100	7800	22	13.8	**FA 04**	15	7800	22	13.7
1.1	**BN 80C**	**4**	1400	7.5	•	75.5	76.2	70.4	0.78	2.7	5.1	2.8	2.5	25	11.3	**FD 04**	15	2600	5300	27	15.2	**FA 04**	15	5300	27	15.1
1.1	**BN 90S**	**4**	1390	7.6	•	76.5	76.2	72.2	0.77	2.70	4.6	2.6	2.2	21	12.2	**FD 14**	15	4800	8000	23	16.4	**FA 14**	15	8000	23	16.3
1.5	**BN 90LA**	**4**	1410	10.2	•	78.7	78.5	74.9	0.77	3.6	5.3	2.8	2.4	28	13.6	**FD 05**	26	3400	6000	32	19.6	**FA 05**	26	6000	32	20.3
1.85	**BN 90LB**	**4**	1390	12.7	•	78.6	78.9	77.2	0.79	4.3	5.1	2.8	2.6	30	15.1	**FD 05**	26	3200	5900	34	21.1	**FA 05**	26	5900	34	21.8
2.2	**BN 100LA**	**4**	1410	14.9	•	81.1	81.4	79.9	0.75	5.2	4.5	2.2	2.0	40	18	**FD 15**	40	2600	4700	44	25	**FA 15**	40	4700	44	25
3	**BN 100LB**	**4**	1410	20	•	82.6	83.8	83.7	0.77	6.8	5.0	2.3	2.2	54	22	**FD 15**	40	2400	4400	58	28	**FA 15**	40	4400	58	29
4	**BN 112M**	**4**	1430	27	•	84.4	84.2	81.6	0.81	8.4	5.6	2.7	2.5	98	30	**FD 06S**	60	—	1400	107	40	**FA 06S**	60	2100	107	42
5.5	**BN 132S**	**4**	1440	36	•	84.7	84.8	82.5	0.81	11.6	5.5	2.3	2.2	213	44	**FD 56**	75	—	1050	223	57	**FA 06**	75	1200	223	58
7.5	**BN 132MA**	**4**	1440	50	•	86.0	86.3	85.3	0.81	15.5	5.7	2.5	2.4	270	53	**FD 06**	100	—	950	280	66	**FA 07**	100	1000	280	71
9.2	**BN 132MB**	**4**	1440	61	•	88.4	88.6	87.5	0.81	18.8	5.9	2.7	2.5	319	59	**FD 07**	150	—	900	342	75	**FA 07**	150	900	342	77
11	**BN 160MR**	**4**	1440	73	•	87.6	87.8	86.0	0.81	22.4	6.0	2.7	2.5	360	70	**FD 07**	150	—	850	382	86	**FA 07**	150	850	382	88
15	**BN 160L**	**4**	1460	98	•	88.7	88.5	88.4	0.81	30	6.0	2.3	2.1	650	99	**FD 08**	200	—	750	725	129	**FA 08**	200	750	710	128
18.5	**BN 180M**	**4**	1460	121	•	89.3	89.5	89.2	0.81	37	6.2	2.6	2.5	790	115	**FD 08**	250	—	700	865	145	**FA 08**	250	700	850	144
22	**BN 180L**	**4**	1460	144	•	89.9	90.0	90.0	0.80	44	6.4	2.5	2.5	1250	135	**FD 09**	300	—	400	1450	175					
30	**BN 200L**	**4**	1460	196	•	91.4	91.7	91.0	0.80	59	7.1	2.7	2.8	1650	157	**FD 09**	400	—	300	1850	197					

○ = n.a. • = IE1

6P — 1000 min^{-1} - S1 — 50 Hz

															d.c. brake						a.c. brake				
															FD						FA				
P_n kW		n min^{-1}	M_n Nm	IE1	η (100%) %	η (75%) %	η (50%) %	cosφ	In 400V A	Is/In	Ms/Mn	Ma/Mn	J_m x 10^{-4} kgm^2	IM B5	Mod	Mb Nm	Z_o 1/h NB	Z_o 1/h SB	J_m x 10^{-4} kgm^2	IM B5	Mod	Mb Nm	Z_o 1/h	J_m x 10^{-4} kgm^2	IM B5
0.09	**BN 63A 6**	880	0.98	○	41.0	41.0	32.9	0.53	0.60	2.1	2.1	1.8	3.4	4.6	**FD 02**	3.5	9000	14000	4.0	6.3	**FA 02**	3.5	14000	4.0	6.1
0.12	**BN 63B 6**	870	1.32	○	45.0	44.0	41.8	0.60	0.64	2.1	1.9	1.7	3.7	4.9	**FD 02**	3.5	9000	14000	4.3	6.6	**FA 02**	3.5	14000	4.3	6.4
0.18	**BN 71A 6**	900	1.91	○	55.0	55.5	51.0	0.69	0.68	2.6	1.9	1.7	8.4	5.5	**FD 03**	5	8100	13500	9.5	8.2	**FA 03**	5.0	13500	9.5	7.9
0.25	**BN 71B 6**	900	2.70	○	62.0	58.5	51.4	0.71	0.82	2.6	1.9	1.7	10.9	6.7	**FD 03**	5	7800	13000	12	9.4	**FA 03**	5.0	13000	12	9.1
0.37	**BN 71C 6**	910	3.9	○	66.0	60.0	53.3	0.69	1.17	3.0	2.4	2.0	12.9	7.7	**FD 53**	7.5	5100	9500	14	10.4	**FA 03**	7.5	9500	14	10.1
0.37	**BN 80A 6**	910	3.9	○	68.0	67.4	63.3	0.68	1.15	3.2	2.2	2.0	21	9.9	**FD 04**	10	5200	8500	23	13.8	**FA 04**	10	8500	23	13.7
0.55	**BN 80B 6**	920	5.7	○	70.0	69.8	64.3	0.68	1.67	3.9	2.6	2.2	25	11.3	**FD 04**	15	4800	7200	27	15.2	**FA 04**	15	7200	27	15.1
0.75	**BN 80C 6**	920	7.8	•	70.0	70.0	64.4	0.65	2.38	3.8	2.5	2.2	28	12.2	**FD 04**	15	3400	6400	30	16.1	**FA 04**	15	6400	30	16.0
0.75	**BN 90S 6**	920	7.8	•	70.0	69.0	64.2	0.68	2.27	3.8	2.4	2.2	26	12.6	**FD 14**	15	3400	6500	28	16.8	**FA 14**	15	6500	28	16.7
1.1	**BN 90L 6**	920	11.4	•	72.9	72.6	69.1	0.69	3.2	3.9	2.3	2.0	33	15	**FD 05**	26	2700	5000	37	21	**FA 05**	26	5000	37	22
1.5	**BN 100LA 6**	940	15.2	•	75.2	74.2	70.3	0.72	4.0	4.1	2.1	2.0	82	22	**FD 15**	40	1900	4100	86	28	**FA 15**	40	4100	86	29
1.85	**BN 100LB 6**	930	19.0	•	76.6	72.8	62.6	0.73	4.8	4.6	2.1	2.0	95	24	**FD 15**	40	1700	3600	99	30	**FA 15**	40	3600	99	31
2.2	**BN 112M 6**	940	22	•	78.5	79.0	76.5	0.73	5.5	4.8	2.2	2.0	168	32	**FD 06S**	60	—	2100	177	42	**FA 06S**	60	2100	177	44
3	**BN 132S 6**	940	30	•	79.7	77.0	75.1	0.76	7.1	5.1	1.9	1.8	216	36	**FD 56**	75	—	1400	226	49	**FA 06**	75	1400	226	50
4	**BN 132MA 6**	950	40	•	81.4	81.5	79.5	0.77	9.2	5.5	2.0	1.8	295	45	**FD 06**	100	—	1200	305	58	**FA 07**	100	1200	318	63
5.5	**BN 132MB 6**	945	56	•	83.1	80.9	79.1	0.78	12.2	6.1	2.1	1.9	383	56	**FD 07**	150	—	1050	406	72	**FA 07**	150	1050	406	74
7.5	**BN 160M 6**	955	75	•	85.0	85.0	84.8	0.81	15.7	5.9	2.2	2.0	740	83	**FD 08**	170	—	900	815	112	**FA 08**	170	900	815	113
11	**BN 160L 6**	960	109	•	86.4	86.5	85.9	0.81	22.7	6.6	2.5	2.3	970	103	**FD 08**	200	—	800	1045	133	**FA 08**	200	800	1045	133
15	**BN 180L 6**	970	148	•	87.7	88.0	87.3	0.82	30	6.2	2.0	2.4	1550	130	**FD 09**	300	—	600	1750	170					
18.5	**BN 200LA 6**	960	184	•	88.6	88.0	87.3	0.81	37	5.9	2.0	2.3	1700	145	**FD 09**	400	—	450	1900	185					

○ = n.a. • = IE1

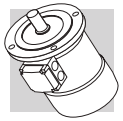

8P — 750 min-1 - S1 — 50 Hz

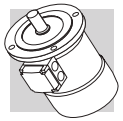

												d.c. brake						a.c. brake				
												FD						FA				
P_n kW			n min-1	M_n Nm	η %	cosφ	In 400V A	Is/In	Ms/Mn	Ma/Mn	J_m x 10^{-4} kgm²	IM B5	Mod	Mb Nm	Z_o 1/h NB	Z_o 1/h SB	J_m x 10^{-4} kgm²	IM B5	Mod	Mb Nm	Z_o 1/h	J_m x 10^{-4} kgm²	IM B5
0.09	**BN 71A**	**8**	680	1.26	47	0.59	0.47	2.3	2.4	2.3	10.9	6.7	**FD 03**	3.5	9000	16000	12.0	9.4	**FA 03**	3.5	16000	12.0	9.1
0.12	**BN 71B**	**8**	680	1.69	51	0.59	0.58	2.1	2.3	2.2	12.9	7.7	**FD 03**	5.0	9000	16000	14.0	10.4	**FA 03**	5.0	16000	14.0	10.1
0.18	**BN 80A**	**8**	690	2.49	51	0.60	0.85	2.4	2.2	2.2	15	8.2	**FD 04**	5.0	6500	11000	16.6	12.1	**FA 04**	5.0	11000	16.6	12.0
0.25	**BN 80B**	**8**	680	3.51	54	0.63	1.06	2.4	2.0	1.9	20	9.9	**FD 04**	10.0	6000	10000	22	13.8	**FA 04**	10.0	10000	23	13.7
0.37	**BN 90S**	**8**	675	5.2	58	0.60	1.53	2.6	2.3	2.1	26	12.6	**FD 14**	15.0	4800	7500	28	16.8	**FA 14**	15.0	7500	28	16.7
0.55	**BN 90L**	**8**	670	7.8	62	0.60	2.13	2.6	2.2	2.0	33	15	**FD 05**	26	4000	6400	37	21	**FA 05**	26	6400	37	22
0.75	**BN 100LA**	**8**	700	10.2	68	0.63	2.53	3.4	1.9	1.7	82	22	**FD 15**	26	2800	4800	86	28	**FA 15**	26	4800	86	29
1.1	**BN 100LB**	**8**	700	15.0	68	0.64	3.65	3.2	1.7	1.7	95	24	**FD 15**	40	2500	4000	99	30	**FA 15**	40	4000	99	31
1.5	**BN 112M**	**8**	710	20.2	71	0.66	4.6	3.7	1.8	1.9	168	32	**FD 06S**	60	—	3000	177	42	**FA 06S**	60	3000	177	44
2.2	**BN 132S**	**8**	710	29.6	75	0.66	6.4	3.8	1.8	2.0	295	45	**FD 56**	75	—	2300	305	58	**FA 06**	75	2300	305	56
3	**BN 132MA**	**8**	710	40.4	76	0.69	8.3	3.9	1.6	1.8	370	53	**FD 06**	100	—	1900	394	69	**FA 07**	100	1900	406	74

2/4P — 3000/1500 min^{-1} - S1 — 50 Hz

P_n kW			n min^{-1}	M_n Nm	η %	cosφ	In 400V A	Is/In	Ms/Mn	Ma/Mn	J_m x 10^{-4} kgm^2	IM B5	d.c. brake FD Mod	Mb Nm	Z_o 1/h NB	Z_o 1/h SB	J_m x 10^{-4} kgm^2	IM B5	a.c. brake FA Mod	Mb Nm	Z_o 1/h	J_m x 10^{-4} kgm^2	IM B5
0.20	**BN 63B**	**2**	2700	0.71	55	0.82	0.64	3.5	2.1	1.9	2.9	4.4	**FD 02**	3.5	2200	2600	3.5	6.1	**FA 02**	3.5	2600	3.5	5.9
0.15		**4**	1350	1.06	49	0.67	0.66	2.6	1.8	1.7					4000	5100					5100		
0.28	**BN 71A**	**2**	2700	0.99	56	0.82	0.88	2.9	1.9	1.7	4.7	4.4	**FD 03**	3.5	2100	2400	5.8	7.1	**FA 03**	3.5	2400	5.8	6.8
0.20		**4**	1370	1.39	59	0.72	0.68	3.1	1.8	1.7					3800	4800					4800		
0.37	**BN 71B**	**2**	2740	1.29	56	0.82	1.16	3.5	1.8	1.8	5.8	5.1	**FD 03**	5.0	1400	2100	6.9	7.8	**FA 03**	5.0	2100	6.9	7.5
0.25		**4**	1390	1.72	60	0.73	0.82	3.3	2.0	1.9					2900	4200					4200		
0.45	**BN 71C**	**2**	2780	1.55	63	0.85	1.21	3.8	1.8	1.8	6.9	5.9	**FD 03**	5.0	1400	2100	8.0	8.6	**FA 03**	5.0	2100	8.0	8.3
0.30		**4**	1400	2.0	63	0.73	0.94	3.6	2.0	1.9					2900	4200					4200		
0.55	**BN 80A**	**2**	2800	1.9	63	0.85	1.48	3.9	1.7	1.7	15	8.2	**FD 04**	5.0	1600	2300	17	12.1	**FA 04**	5.0	2300	16.6	12.0
0.37		**4**	1400	2.5	67	0.79	1.01	4.1	1.8	1.9					3000	4000					4000		
0.75	**BN 80B**	**2**	2780	2.6	65	0.85	1.96	3.8	1.9	1.8	20	9.9	**FD 04**	10	1400	1600	22	13.8	**FA 04**	10	1600	22	13.7
0.55		**4**	1400	3.8	68	0.81	1.44	3.9	1.7	1.7					2700	3600					3600		
1.1	**BN 90S**	**2**	2790	3.8	71	0.82	2.73	4.7	2.3	2.0	21	12.2	**FD 14**	10	1500	1600	23	16.4	**FA 14**	10	1600	23	16.3
0.75		**4**	1390	5.2	66	0.79	2.08	4.6	2.4	2.2					2300	2800					2800		
1.5	**BN 90L**	**2**	2780	5.2	70	0.85	3.64	4.5	2.4	2.1	28	14.0	**FD 05**	26	1050	1200	32	20	**FA 05**	26	1200	32	21
1.1		**4**	1390	7.6	73	0.81	2.69	4.7	2.5	2.2					1600	2000					2000		
2.2	**BN 100LA**	**2**	2800	7.5	72	0.85	5.2	4.5	2.0	1.9	40	18.3	**FD 15**	26	600	900	44	25	**FA 15**	26	900	44	25
1.5		**4**	1410	10.2	73	0.79	3.8	4.7	2.0	2.0					1300	2300					2300		
3.5	**BN 100LB**	**2**	2850	11.7	80	0.84	7.5	5.4	2.2	2.1	61	25	**FD 15**	40	500	900	65	31	**FA 15**	40	900	65	32
2.5		**4**	1420	16.8	82	0.80	5.5	5.2	2.2	2.2					1000	2100					2100		
4	**BN 112M**	**2**	2880	13.3	79	0.83	8.8	6.1	2.4	2.0	98	30	**FD 06S**	60	—	700	107	40	**FA 06S**	60	700	107	42
3.3		**4**	1420	22.2	80	0.80	7.4	5.1	2.1	2.0					—	1200					1200		
5.5	**BN 132S**	**2**	2890	18.2	80	0.87	11.4	5.9	2.4	2.0	213	44	**FD 56**	75	—	350	223	57	**FA 06**	75	350	223	58
4.4		**4**	1440	29	82	0.84	9.2	5.3	2.2	2.0					—	900					900		
7.5	**BN 132MA**	**2**	2900	25	82	0.87	15.2	6.5	2.4	2.0	270	53	**FD 06**	100	—	350	280	66	**FA 07**	100	350	293	71
6		**4**	1430	40	84	0.85	12.1	5.8	2.3	2.1					—	900					900		
9.2	**BN 132MB**	**2**	2920	30	83	0.86	18.6	6.0	2.6	2.2	319	59	**FD 07**	150	—	300	342	75	**FA 07**	150	300	342	77
7.3		**4**	1440	48	85	0.85	14.6	5.5	2.3	2.1					—	800					800		

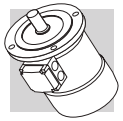

2/6P — 3000/1000 min^{-1} - S3 60/40% — 50 Hz

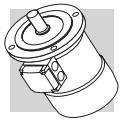

													d.c. brake						a.c. brake				
													FD						FA				
P_n kW			n min^{-1}	M_n Nm	η %	cosφ	In 400V A	Is/In	Ms/Mn	Ma/Mn	J_m x 10^{-4} kgm^2	IM B5	Mod	Mb Nm	Z_o 1/h NB	Z_o 1/h SB	J_m x 10^{-4} kgm^2	IM B5	Mod	Mb Nm	Z_o 1/h	J_m x 10^{-4} kgm^2	IM B5
0.25	**BN 71A**	**2**	2850	0.84	60	0.82	0.73	4.3	1.9	1.8	6.9	5.9	**FD 03**	1.75	1500	1700	8.0	8.6	**FA 03**	2.5	1700	8.0	8.3
0.08		**6**	910	0.84	43	0.70	0.38	2.1	1.4	1.5					10000	13000					13000		
0.37	**BN 71B**	**2**	2880	1.23	62	0.80	1.08	4.4	1.9	1.8	9.1	7.3	**FD 03**	3.5	1000	1300	10.2	10.0	**FA 03**	3.5	1300	10.2	9.7
0.12		**6**	900	1.27	44	0.73	0.54	2.4	1.4	1.5					9000	11000					11000		
0.55	**BN 80A**	**2**	2800	1.88	63	0.86	1.47	4.5	1.9	1.7	20	9.9	**FD 04**	5.0	1500	1800	22	13.8	**FA 04**	5.0	1800	22	13.7
0.18		**6**	930	1.85	52	0.65	0.77	3.3	2.0	1.9					4100	6300					6300		
0.75	**BN 80B**	**2**	2800	2.6	66	0.87	1.89	4.3	1.8	1.6	25	11.3	**FD 04**	5.0	1700	1900	27	15.2	**FA 04**	5.0	1900	27	15.1
0.25		**6**	930	2.6	54	0.67	1.00	3.2	1.7	1.8					3800	6000					6000		
1.10	**BN 90L**	**2**	2860	3.7	67	0.84	2.82	4.7	2.1	1.9	28	14.0	**FD 05**	13	1400	1600	32	20	**FA 05**	13	1600	32	21
0.37		**6**	920	3.8	59	0.71	1.27	3.3	1.6	1.6					3400	5200					5200		
1.5	**BN 100LA**	**2**	2880	5	73	0.84	3.53	5.1	1.9	2.0	40	18.3	**FD 15**	13	1000	1200	44	24	**FA 15**	13	1200	44	25
0.55		**6**	940	5.6	64	0.67	1.85	3.5	1.7	1.8					2900	4000					4000		
2.2	**BN 100LB**	**2**	2900	7.2	77	0.85	4.9	5.9	2.0	2.0	61	25	**FD 15**	26	700	900	65	31	**FA 15**	26	900	65	32
0.75		**6**	950	7.5	67	0.64	2.5	3.3	1.9	1.8					2100	3000					3000		
3	**BN 112M**	**2**	2900	9.9	78	0.87	6.4	6.3	2.0	2.1	98	30	**FD 06S**	40	—	1000	107	40	**FA 06S**	40	1000	107	32
1.1		**6**	950	11.1	72	0.64	3.4	3.9	1.8	1.8					—	2600					2600		
4.5	**BN 132S**	**2**	2910	14.8	78	0.84	9.9	5.8	1.9	1.8	213	44	**FD 56**	37	—	500	223	57	**FA 06**	37	500	223	58
1.5		**6**	960	14.9	74	0.67	4.4	4.2	1.9	2.0					—	2100					2100		
5.5	**BN 132M**	**2**	2920	18.0	78	0.87	11.7	6.2	2.1	1.9	270	53	**FD 56**	50	—	400	280	66	**FA 06**	50	400	280	67
2.2		**6**	960	22	77	0.71	5.8	4.3	2.1	2.0					—	1900					1900		

2/8P — 3000/750 min-1 - S3 60/40% — 50 Hz

													d.c. brake						a.c. brake				
													FD						FA				
P_n kW			n min-1	M_n Nm	η %	cosφ	In 400V A	Is/In	Ms/Mn	Ma/Mn	J_m x 10^{-4} kgm²	IM B5	Mod	Mb Nm	Z_o 1/h NB	Z_o 1/h SB	J_m x 10^{-4} kgm²	IM B5	Mod	Mb Nm	Z_o 1/h	J_m x 10^{-4} kgm²	IM B5
0.25	**BN 71A**	**2**	2790	0.86	61	0.87	0.68	3.9	1.8	1.9	10.9	6.7	**FD 03**	1.75	1300	1400	12	9.4	**FA 03**	2.5	1400	12	9.1
0.06		**8**	680	0.84	31	0.61	0.46	2.0	1.8	1.9					10000	13000					13000		
0.37	**BN 71B**	**2**	2800	1.26	63	0.86	0.99	3.9	1.8	1.9	12.9	7.7	**FD 03**	3.5	1200	1300	14	10.4	**FA 03**	3.5	1300	14	10.1
0.09		**8**	670	1.28	34	0.75	0.51	1.8	1.4	1.5					9500	13000					13000		
0.55	**BN 80A**	**2**	2830	1.86	66	0.86	1.40	4.4	2.1	2.0	20	9.9	**FD 04**	5.0	1500	1800	22	13.8	**FA 04**	5.0	1800	22	13.7
0.13		**8**	690	1.80	41	0.64	0.72	2.3	1.6	1.7					5600	8000					8000		
0.75	**BN 80B**	**2**	2800	2.6	68	0.88	1.81	4.6	2.1	2.0	25	11.3	**FD 04**	10	1700	1900	27	15.2	**FA 04**	10	1900	27	15.1
0.18		**8**	690	2.5	43	0.66	0.92	2.3	1.6	1.7					4800	7300					7300		
1.10	**BN 90L**	**2**	2830	3.7	63	0.84	3.00	4.5	2.1	1.9	28	14.0	**FD 05**	13	1400	1600	32	20	**FA 05**	13	1600	32	21
0.28		**8**	690	3.9	48	0.63	1.34	2.4	1.8	1.9					3400	5100					5100		
1.5	**BN 100LA**	**2**	2880	5.0	69	0.85	3.69	4.7	1.9	1.8	40	18.3	**FD 15**	13	1000	1200	44	25	**FA 15**	13	1200	44	25
0.37		**8**	690	5.1	46	0.63	1.84	2.1	1.6	1.6					3300	5000					5000		
2.4	**BN 100LB**	**2**	2900	7.9	75	0.82	5.6	5.4	2.1	2.0	61	25	**FD 15**	26	550	700	65	31	**FA 15**	26	700	65	32
0.55		**8**	700	7.5	54	0.58	2.5	2.6	1.8	1.8					2000	3500					3500		
3	**BN 112M**	**2**	2900	9.9	76	0.87	6.5	6.3	2.1	1.9	98	30	**FD 06S**	40	—	900	107	40	**FA 06S**	40	900	107	42
0.75		**8**	690	10.4	60	0.65	2.8	2.5	1.6	1.6					—	2900					2900		
4	**BN 132S**	**2**	2870	13.3	73	0.84	9.4	5.6	2.3	2.4	213	44	**FD 56**	37	—	500	223	57	**FA 06**	37	500	223	58
1		**8**	690	13.8	66	0.62	3.5	2.9	1.9	1.8					—	3500					3500		
5.5	**BN 132M**	**2**	2870	18.3	75	0.84	12.6	6.1	2.4	2.5	270	53	**FD 06**	50	—	400	280	66	**FA 06**	50	400	280	67
1.5		**8**	690	21	68	0.63	5.1	2.9	1.9	1.9					—	2400					2400		

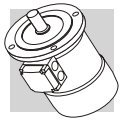

2/12P — 3000/500 min-1 - S3 60/40% — 50 Hz

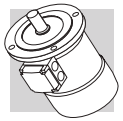

													d.c. brake						a.c. brake				
													FD						FA				
P_n kW			n min-1	M_n Nm	η %	cosφ	In 400V A	Is/In	Ms/Mn	Ma/Mn	J_m x 10^{-4} kgm²	IM B5	Mod	Mb Nm	Z_o 1/h NB	Z_o 1/h SB	J_m x 10^{-4} kgm²	IM B5	Mod	Mb Nm	Z_o 1/h	J_m x 10^{-4} kgm²	IM B5
0.55	**BN 80B**	**2**	2820	1.86	64	0.89	1.39	4.2	1.6	1.7	25	11.3	**FD 04**	5.0	1000	1300	27	15.2	**FA 04**	5.0	1300	27	15.1
0.09		**12**	430	2.0	30	0.63	0.69	1.8	1.9	1.8					8000	12000					12000		
0.75	**BN 90L**	**2**	2790	2.6	56	0.89	2.17	4.2	1.8	1.7	26	12.6	**FD 05**	13	1000	1150	30	18.6	**FA 05**	13	1150	30	19.3
0.12		**12**	430	2.7	26	0.63	1.06	1.7	1.4	1.6					4600	6300					6300		
1.10	**BN 100LA**	**2**	2850	3.7	65	0.85	2.87	4.5	1.6	1.8	40	18.3	**FD 15**	13	700	900	44	25	**FA 15**	13	900	44	25
0.18		**12**	430	4.0	26	0.54	1.85	1.5	1.3	1.5					4000	6000					6000		
1.5	**BN 100LB**	**2**	2900	4.9	67	0.86	3.76	5.6	1.9	1.9	54	22	**FD 15**	13	700	900	58	28	**FA 15**	13	900	58	29
0.25		**12**	440	5.4	36	0.46	2.18	1.8	1.7	1.8					3800	5000					5000		
2	**BN 112M**	**2**	2900	6.6	74	0.88	4.43	6.5	2.1	2.0	98	30	**FD 06S**	20	—	800	107	40	**FA 06S**	20	800	107	42
0.3		**12**	460	6.2	46	0.43	2.19	2.0	2.1	2.0					—	3400					3400		
3	**BN 132S**	**2**	2920	9.8	74	0.87	6.7	6.8	2.3	1.9	213	44	**FD 56**	37	—	450	223	57	**FA 06**	37	450	223	58
0.5		**12**	470	10.2	51	0.43	3.3	2.0	1.7	1.6					—	3000					3000		
4	**BN 132M**	**2**	2920	13.1	75	0.89	8.6	5.9	2.4	2.3	270	53	**FD 56**	37	—	400	280	66	**FA 06**	37	400	280	67
0.7		**12**	460	14.5	53	0.44	4.3	1.9	1.7	1.6					—	2800					2800		

4/6P — 1500/1000 min^{-1} - S1 — 50 Hz

P_n kW			n min^{-1}	M_n Nm	η %	cosφ	In 400V A	Is/In	Ms/Mn	Ma/Mn	J_m x 10^{-4} kgm^2	IM B5	d.c. brake FD Mod	Mb Nm	Z_o 1/h NB	Z_o 1/h SB	J_m x 10^{-4} kgm^2	IM B5	a.c. brake FA Mod	Mb Nm	Z_o 1/h	J_m x 10^{-4} kgm^2	IM B5
0.22	**BN 71B**	**4**	1410	1.5	64	0.74	0.67	3.9	1.8	1.9	9.1	7.3	**FD 03**	3.5	2500	3500	10.2	10.0	**FA 03**	3.5	3500	10.2	9.7
0.13		**6**	920	1.4	43	0.67	0.65	2.3	1.6	1.7					5000	9000					9000		
0.30	**BN 80A**	**4**	1410	2.0	61	0.82	0.87	3.5	1.3	1.5	15	8.2	**FD 04**	5.0	2500	3100	16.6	12.1	**FA 04**	5.0	3100	16.6	12.0
0.20		**6**	930	2.1	54	0.66	0.81	3.2	1.9	2.0					4000	6000					6000		
0.40	**BN 80B**	**4**	1430	2.7	63	0.75	1.22	3.9	1.8	1.8	20	9.9	**FD 04**	10	1800	2300	22	13.8	**FA 04**	10	2300	22	13.7
0.26		**6**	930	2.7	55	0.70	0.97	2.7	1.5	1.6					3600	5500					5500		
0.55	**BN 90S**	**4**	1420	3.7	70	0.78	1.45	4.5	2.0	1.9	21	12.2	**FD 14**	10	1500	2100	23	16.1	**FA 14**	10	2100	23	16.3
0.33		**6**	930	3.4	62	0.70	1.10	3.7	2.3	2.0					2500	4100					4100		
0.75	**BN 90L**	**4**	1420	5.0	74	0.78	1.88	4.3	1.9	1.8	28	14	**FD 05**	13	1400	2000	32	20	**FA 05**	13	2000	32	21
0.45		**6**	920	4.7	66	0.71	1.39	3.3	2.0	1.9					2300	3600					3600		
1.1	**BN 100LA**	**4**	1450	7.2	74	0.79	2.72	5.0	1.7	1.9	82	22	**FD 15**	26	1400	2000	86	28	**FA 15**	26	2000	86	29
0.8		**6**	950	8.0	65	0.69	2.57	4.1	1.9	2.1					2100	3300					3300		
1.5	**BN 100LB**	**4**	1450	9.9	75	0.79	3.65	5.1	1.7	1.9	95	25	**FD 15**	26	1300	1800	99	31	**FA 15**	26	1800	99	32
1.1		**6**	950	11.1	72	0.68	3.24	4.3	2.0	2.1					2000	3000					3000		
2.3	**BN 112M**	**4**	1450	15.2	75	0.78	5.7	5.2	1.8	1.9	168	32	**FD 06S**	40	—	1600	177	42	**FA 06S**	40	1600	177	44
1.5		**6**	960	14.9	73	0.72	4.1	4.9	2.0	2.0					—	2400					2400		
3.1	**BN 132S**	**4**	1460	20	83	0.83	6.5	5.9	2.1	2.0	213	44	**FD 56**	37	—	1200	223	57	**FA 06**	37	1200	223	58
2		**6**	960	20	77	0.75	4.9	4.5	2.1	2.1					—	1900					1900		
4.2	**BN 132MA**	**4**	1460	27	84	0.82	8.8	5.9	2.1	2.2	270	53	**FD 06**	50	—	900	280	66	**FA 06**	50	900	280	67
2.6		**6**	960	26	79	0.72	6.6	4.3	2.0	2.0					—	1500					1500		

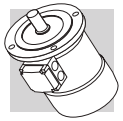

4/8P — 1500/750 min^{-1} - S1 — 50 Hz

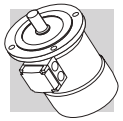

													d.c. brake						a.c. brake				
													FD						FA				
P_n kW			n min^{-1}	M_n Nm	η %	cosφ	In 400V A	Is/In	Ms/Mn	Ma/Mn	J_m x 10^{-4} kgm^2	IM B5	Mod	Mb Nm	Z_o 1/h NB	Z_o 1/h SB	J_m x 10^{-4} kgm^2	IM B5	Mod	Mb Nm	Z_o 1/h	J_m x 10^{-4} kgm^2	IM B5
0.37	**BN 80A**	**4**	1400	2.5	63	0.82	1.03	3.3	1.4	1.4	15	8.2	**FD 04**	10	2300	3500	16.6	12.1	**FA 04**	10	3500	16.6	12.0
0.18		**8**	690	2.5	44	0.60	0.98	2.2	1.5	1.6					4500	7000					7000		
0.55	**BN 80B**	**4**	1390	3.8	65	0.86	1.42	3.8	1.7	1.6	20	9.9	**FD 04**	10	2200	2900	22	13.8	**FA 04**	10	2900	22	13.7
0.30		**8**	670	4.3	49	0.65	1.36	2.3	1.7	1.8					4200	6500					6500		
0.65	**BN 90S**	**4**	1390	4.5	73	0.85	1.51	4.0	1.9	1.9	28	13.6	**FD 14**	15	2300	2800	30	17.8	**FA 14**	15	2800	30	17.7
0.35		**8**	690	4.8	49	0.57	1.81	2.5	2.1	2.2					3500	6000					6000		
0.9	**BN 90L**	**4**	1370	6.3	73	0.87	2.05	3.8	1.8	1.8	30	15.1	**FD 05**	26	1700	2100	34	21	**FA 05**	26	2100	34	22
0.5		**8**	670	7.1	57	0.62	2.04	2.4	2.1	2.0					2500	4200					4200		
1.30	**BN 100LA**	**4**	1420	8.7	72	0.83	3.14	4.3	1.7	1.8	82	22	**FD 15**	40	1300	1700	86	28	**FA 15**	40	1700	86	29
0.70		**8**	700	9.6	58	0.64	2.72	2.8	1.8	1.8					2000	3400					3400		
1.8	**BN 100LB**	**4**	1420	12.1	69	0.87	4.3	4.2	1.6	1.7	95	25	**FD 15**	40	1200	1700	99	31	**FA 15**	40	1700	99	32
0.9		**8**	700	12.3	62	0.63	3.3	3.2	1.7	1.8					1600	2600					2600		
2.2	**BN 112M**	**4**	1440	14.6	77	0.85	4.9	5.3	1.8	1.8	168	32	**FD 06S**	60	—	1200	177	42	**FA 06S**	60	1200	177	43
1.2		**8**	710	16.1	70	0.63	3.9	3.3	1.9	1.8					—	2000					2000		
3.6	**BN 132S**	**4**	1440	24	80	0.82	7.9	6.5	2.1	1.9	295	45	**FD 56**	75	—	1000	305	58	**FA 06**	75	1000	305	59
1.8		**8**	720	24	72	0.55	6.6	4.6	1.9	2.0					—	1400					1400		
4.6	**BN 132M**	**4**	1450	30	81	0.83	9.9	6.5	2.2	1.9	383	56	**FD 06**	100	—	1000	393	69	**FA 07**	100	1000	406	74
2.3		**8**	720	31	73	0.54	8.4	4.4	2.3	2.0					—	1300					1300		

2P — 3000 min-1 - S1 — 50 Hz

P_n kW			n min-1	M_n Nm	IE1	η (100%) %	η (75%) %	η (50%) %	cosφ	In 400V A	Is/In	Ms/Mn	Ma/Mn	J_m x 10^{-4} kgm²	IM B5	d.c. brake FD Mod	Mb Nm	Z_o 1/h NB	Z_o 1/h SB	J_m x 10^{-4} kgm²	IM B5	a.c. brake FA Mod	Mb Nm	Z_o 1/h	J_m x 10^{-4} kgm²	IM B5
0.18	**M 05A**	**2**	2730	0.63	○	59.9	56.9	51.9	0.77	0.56	3.0	2.1	2.0	2.0	3.2	**FD 02**	1.75	3900	4800	2.6	4.9	**FA 02**	1.75	4800	2.6	4.7
0.25	**M 05B**	**2**	2740	0.87	○	66.0	64.8	64.8	0.76	0.72	3.3	2.3	2.3	2.3	3.6	**FD 02**	1.75	3900	4800	3.0	5.3	**FA 02**	1.75	4800	3.0	5.1
0.37	**M 05C**	**2**	2800	1.26	○	69.1	66.8	66.8	0.78	0.99	3.9	2.6	2.6	3.3	4.8	**FD 02**	3.5	3600	4500	3.9	6.5	**FA 02**	3.5	4500	3.9	6.3
0.55	**M 1SD**	**2**	2820	1.86	○	76.0	75.8	74.8	0.76	1.37	5.0	2.9	2.8	4.1	5.8	**FD 03**	5	2900	4200	5.3	8.5	**FA 03**	5	4200	5.3	8.2
0.75	**M 1LA**	**2**	2810	2.6	○	76.6	76.2	76.2	0.76	1.86	5.1	3.1	2.8	5.0	6.9	**FD 03**	5	1900	3300	6.1	9.6	**FA 03**	5	3300	6.1	9.3
1.1	**M 2SA**	**2**	2800	3.8	•	76.4	76.2	75.0	0.81	2.57	4.8	2.8	2.4	9.0	8.8	**FD 04**	10	1500	3000	10.6	11.9	**FA 04**	10	3000	10.6	12.6
1.5	**M 2SB**	**2**	2800	5.1	•	79.1	79.5	77.2	0.81	3.4	4.9	2.7	2.4	11.4	10.6	**FD 04**	15	1300	2600	13.0	9.9	**FA 04**	15	2600	13.0	14.4
2.2	**M 3SA**	**2**	2880	7.3	•	82.7	82.1	81.0	0.80	4.8	6.3	2.9	2.7	24	15.5	**FD 15**	26	1100	2400	28	22	**FA 15**	26	2400	28	23
3	**M 3LA**	**2**	2860	10.0	•	81.5	81.3	77.4	0.79	6.7	5.6	2.6	2.2	31	18.7	**FD 15**	26	700	1600	35	25	**FA 15**	26	1600	35	26
4	**M 3LB**	**2**	2870	13.3	•	83.1	83.0	77.8	0.80	8.7	5.8	2.7	2.5	39	22	**FD 15**	40	450	900	43	28	**FA 15**	40	900	43	29
5.5	**M 4SA**	**2**	2890	18.2	•	84.7	84.5	81.2	0.84	11.2	5.9	2.6	2.2	101	33	**FD 06**	50	—	600	112	46	**FA 06**	50	600	112	47
7.5	**M 4SB**	**2**	2900	25	•	86.5	86.3	84.4	0.85	14.7	6.4	2.6	2.2	145	40	**FD 06**	50	—	550	154	53	**FA 06**	50	550	154	54
9.2	**M 4LA**	**2**	2930	30	•	87.0	86.5	83.6	0.86	17.7	6.7	2.8	2.3	178	51	**FD 56**	75	—	430	189	64	**FA 06**	75	430	189	65
11	**M 4LC**	**2**	2920	36	•	87.6	87.0	86.0	0.88	20.6	6.9	2.9	2.5	210	60											
15	**M 5SB**	**2**	2930	49	•	89.6	89.4	88.0	0.86	28.1	7.1	2.6	2.3	340	70											
18.5	**M 5SC**	**2**	2930	60	•	90.4	90.1	89.0	0.86	34	7.6	2.7	2.3	420	83											
22	**M 5LA**	**2**	2930	72	•	89.9	89.7	89.5	0.88	40	7.8	2.6	2.4	490	95											

○ = n.a. • = IE1

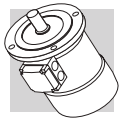

4P — 1500 min-1 - S1 — 50 Hz

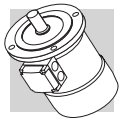

															d.c. brake						a.c. brake				
															FD						FA				
P_n kW			n min-1	M_n Nm	IE1	η (100%) %	η (75%) %	η (50%) %	cosφ	In 400V A	Is/In	Ms/Mn	Ma/Mn	J_m x 10^{-4} kgm²	IM B5	Mod	Mb Nm	Z_o 1/h NB	Z_o 1/h SB	J_m x 10^{-4} kgm²	IM B5	Mod	Mb Nm	Z_o 1/h	J_m x 10^{-4} kgm²	IM B5
0.09	**M 0B**	**4**	1350	0.64	○	51.7	47.6	42.9	0.60	0.42	2.6	2.5	2.4	1.5	2.9											
0.12	**M 05A**	**4**	1350	0.85	○	59.8	56.2	47.0	0.62	0.47	2.6	1.9	1.8	2.0	3.2	**FD 02**	1.75	10000	13000	2.6	4.9	**FA 02**	1.75	13000	2.6	4.7
0.18	**M 05B**	**4**	1320	1.30	○	54.8	52.9	52.5	0.67	0.71	2.6	2.2	2.0	2.3	3.6	**FD 02**	3.5	10000	13000	3.0	5.3	**FA 02**	3.5	13000	3.0	5.1
0.25	**M 05C**	**4**	1340	1.78	○	65.3	65.0	57.9	0.69	0.80	2.7	2.1	1.9	3.3	4.8	**FD 02**	3.5	7800	10000	3.9	6.5	**FA 02**	3.5	10000	3.9	6.3
0.37	**M 1SD**	**4**	1370	2.6	○	66.8	66.7	63.0	0.76	1.05	3.7	2.0	1.9	6.9	5.5	**FD 03**	5	6000	9400	8.0	8.2	**FA 03**	5	9400	8.0	7.9
0.55	**M 1LA**	**4**	1380	3.8	○	69.0	68.9	68.8	0.74	1.55	4.1	2.3	2.3	9.1	6.9	**FD 53**	7.5	4300	8700	10.2	9.6	**FA 03**	7.5	8700	10.2	9.3
0.75	**M 2SA**	**4**	1400	5.1	•	75.0	74.5	69.3	0.78	1.85	4.9	2.7	2.5	20	9.2	**FD 04**	15	4100	7800	22	13.1	**FA 04**	15	7800	22	13.0
1.1	**M 2SB**	**4**	1400	7.5	•	76.4	76.2	70.4	0.78	2.66	5.1	2.8	2.5	25	10.6	**FD 04**	15	2600	5300	27	14.5	**FA 04**	15	5300	27	14.4
1.5	**M 3SA**	**4**	1410	10.2	•	79.6	80.5	79.3	0.77	3.5	4.6	2.1	2.1	34	15.5	**FD 15**	26	2800	4900	38	22	**FA 15**	26	4900	38	23
2.2	**M 3LA**	**4**	1410	14.9	•	81.1	81.4	79.9	0.75	5.2	4.5	2.2	2.0	40	17	**FD 15**	40	2600	4700	44	24	**FA 15**	40	4700	44	24
3	**M 3LB**	**4**	1410	20	•	82.6	83.8	83.7	0.77	6.8	5.0	2.3	2.2	54	21	**FD 15**	40	2400	4400	58	27	**FA 15**	40	4400	58	28
4	**M 3LC**	**4**	1400	27	○	82.7	83.1	80.5	0.78	9.0	4.7	2.3	2.2	61	23	**FD 55**	55	—	1300	65	29	**FA 15**	40	1300	65	30
5.5	**M 4SA**	**4**	1440	36	•	84.7	84.8	82.5	0.81	11.6	5.5	2.3	2.2	213	42	**FD 56**	75	—	1050	223	55	**FA 06**	75	1050	223	56
7.5	**M 4LA**	**4**	1440	50	•	86.0	86.3	85.3	0.81	15.5	5.7	2.5	2.4	270	51	**FD 06**	100	—	950	280	64	**FA 07**	100	950	280	65
9.2	**M 4LB**	**4**	1440	61	•	88.4	88.6	87.5	0.81	18.8	5.9	2.7	2.5	319	57	**FD 07**	150	—	900	342	73	**FA 07**	150	900	342	75
11	**M 4LC**	**4**	1440	73	•	87.6	87.8	86.0	0.81	22.4	6.0	2.7	2.5	360	65	**FD 07**	150	—	850	382	81	**FA 07**	150	850	382	83
15	**M 5SB**	**4**	1460	98	•	88.7	88.5	88.4	0.81	30.1	6.0	2.3	2.1	650	85	**FD 08**	200	—	750	725	115	**FA 08**	200	750	710	114
18.5	**M 5LA**	**4**	1460	121	•	89.3	89.5	89.2	0.81	37	6.2	2.6	2.5	790	101	**FD 08**	250	—	700	865	131	**FA 08**	250	700	850	130

○ = n.a. • = IE1

6P — 1000 min-1 - S1 — 50 Hz

P_n kW			n min-1	M_n Nm	IE1	η (100%) %	η (75%) %	η (50%) %	cosφ	In 400V A	Is/In	Ms/Mn	Ma/Mn	J_m x 10^{-4} kgm²	IM B5	d.c. brake FD Mod	Mb Nm	Z_o 1/h NB	Z_o 1/h SB	J_m x 10^{-4} kgm²	IM B5	a.c. brake FA Mod	Mb Nm	Z_o 1/h	J_m x 10^{-4} kgm²	IM B5
0.09	M 05A	6	880	0.98	○	41.0	41.0	32.9	0.53	0.60	2.1	2.1	1.8	3.4	4.3	FD 02	3.5	9000	14000	4.0	6.0	FA 02	3.5	14000	4.0	5.8
0.12	M 05B	6	870	1.32	○	45.0	44.0	41.8	0.60	0.64	2.1	1.9	1.7	3.7	4.6	FD 02	3.5	9000	14000	4.3	6.3	FA 02	3.5	14000	4.3	6.1
0.18	M 1SC	6	900	1.91	○	55.0	55.5	51.0	0.69	0.68	2.6	1.9	1.7	8.4	5.1	FD 03	5	8100	13500	9.5	7.8	FA 03	5	13500	9.5	7.5
0.25	M 1SD	6	900	2.7	○	62.0	58.5	51.4	0.71	0.82	2.6	1.9	1.7	10.9	6.3	FD 03	5	7800	13000	12	9.0	FA 03	5	13000	12	8.7
0.37	M 1LA	6	910	3.9	○	66.0	60.0	53.3	0.69	1.17	3.0	2.4	2.0	12.9	7.3	FD 53	7.5	5100	9500	14	10.0	FA 03	7.5	9500	14	9.7
0.55	M 2SA	6	920	5.7	○	70.0	69.8	64.3	0.68	1.67	3.9	2.6	2.2	25	10.6	FD 04	15	4800	7200	27	14.5	FA 04	15	7200	27	14.4
0.75	M 2SB	6	920	7.8	•	70.0	70.0	64.4	0.65	2.38	3.8	2.5	2.2	28	11.5	FD 04	15	3400	6400	30	15.4	FA 04	15	6400	30	15.3
1.1	M 3SA	6	920	11.4	•	75.0	74.0	72.0	0.72	2.9	4.3	2.0	1.8	33	17	FD 15	26	2700	5000	37	23	FA 15	26	5000	37	24
1.5	M 3LA	6	940	15.2	•	75.2	74.2	70.3	0.72	4.0	4.1	2.1	2.0	82	21	FD 15	40	1900	4100	86	27	FA 15	40	4100	86	28
1.85	M 3LB	6	930	19.0	•	76.6	72.8	62.6	0.73	4.8	4.6	2.1	2.0	95	23	FD 15	40	1700	3600	99	29	FA 15	40	3600	99	30
2.2	M 3LC	6	930	23	•	77.7	76.8	72.4	0.71	5.8	4.7	2.3	2.1	95	23	FD 55	55	—	1900	99	29	FA 15	40	1900	99	30
3	M 4SA	6	940	30	•	79.7	77.0	75.1	0.76	7.1	5.1	1.9	1.8	216	34	FD 56	75	—	1400	226	47	FA 06	75	1400	226	48
4	M 4LA	6	950	40	•	81.4	81.5	79.5	0.77	9.2	5.5	2.0	1.8	295	43	FD 06	100	—	1200	305	56	FA 07	100	1200	305	57
5.5	M 4LB	6	945	56	•	83.1	80.9	79.1	0.78	12.2	6.1	2.1	1.9	383	54	FD 07	150	—	1050	406	70	FA 07	150	1050	406	72
7.5	M 5SA	6	955	75	•	85.0	85.0	84.8	0.81	15.7	5.9	2.2	2.0	740	69	FD 08	170	—	900	815	98	FA 08	170	900	800	98
11	M 5SB	6	960	109	•	86.4	86.5	85.9	0.81	22.7	6.6	2.5	2.3	970	89	FD 08	200	—	800	1045	119	FA 08	200	800	1030	118

○ = n.a. • = IE1

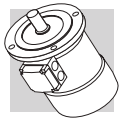

2/4P — 3000/1500 min^{-1} - S1 — 50 Hz

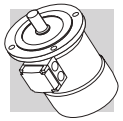

P_n kW			n min^{-1}	M_n Nm	η %	cosφ	In 400V A	Is/In	Ms/Mn	Ma/Mn	J_m x 10^{-4} kgm^2	IM B5	d.c. brake FD Mod	Mb Nm	Z_o 1/h NB	Z_o 1/h SB	J_m x 10^{-4} kgm^2	IM B5	a.c. brake FA Mod	Mb Nm	Z_o 1/h	J_m x 10^{-4} kgm^2	IM B5
0.20	**M 05A**	**2**	2700	0.71	55	0.82	0.64	3.5	2.1	1.9	2.9	4.1	**FD 02**	3.5	2200	2600	3.5	5.8	**FA 02**	3.5	2600	3.5	5.6
0.15		**4**	1350	1.06	49	0.67	0.66	2.6	1.8	1.7					4000	5100					5100		
0.28	**M 1SB**	**2**	2700	0.99	56	0.82	0.88	2.9	1.9	1.7	4.7	4.0	**FD 03**	3.5	2100	2400	5.8	6.7	**FA 03**	3.5	2400	5.8	6.4
0.20		**4**	1370	1.39	59	0.68	1.02	3.1	1.8	1.7					3800	4800					4800		
0.37	**M 1SC**	**2**	2740	1.29	56	0.82	1.16	3.5	1.8	1.8	5.8	4.7	**FD 03**	5	1400	2100	6.9	7.4	**FA 03**	5	2100	6.9	7.1
0.25		**4**	1390	1.72	60	0.73	0.82	3.3	2.0	1.9					2900	4200					4200		
0.45	**M 1SD**	**2**	2780	1.55	63	0.85	1.21	3.8	1.8	1.8	6.9	5.5	**FD 03**	5	1400	2100	8.0	8.2	**FA 03**	5	2100	8.0	7.9
0.30		**4**	1400	2.0	63	0.74	0.93	3.8	2.1	1.9					2900	4200					4200		
0.55	**M 1LA**	**2**	2800	1.9	73	0.79	1.38	4.2	2.0	1.8	9.1	6.9	**FD 03**	5	1600	2200	10.2	9.6	**FA 03**	5	2200	10.2	9.3
0.37		**4**	1400	2.5	68	0.72	1.09	3.9	2.2	2.0					3300	4600					4600		
0.75	**M 2SA**	**2**	2780	2.6	65	0.85	1.96	3.8	1.9	1.8	20	9.2	**FD 04**	10	1400	1600	22	13.1	**FA 04**	10	1600	22	13.0
0.55		**4**	1400	3.8	68	0.81	1.44	3.9	1.7	1.7					2700	3600					3600		
1.1	**M 2SB**	**2**	2730	3.9	65	0.86	2.84	3.9	2.0	1.9	25	10.7	**FD 04**	10	1200	1500	27	14.5	**FA 04**	10	1500	27	14.5
0.75		**4**	1410	5.1	75	0.81	1.78	4.5	2.1	2.0					2300	3100					3100		
1.5	**M 3SA**	**2**	2830	5.1	74	0.83	3.5	4.7	2.1	2.0	34	15.5	**FD 15**	26	700	1000	38	22	**FA 15**	26	1000	38	23
1.1		**4**	1420	7.4	77	0.78	2.6	4.3	2.1	2.0					1600	2600					2600		
2.2	**M 3LA**	**2**	2800	7.5	72	0.85	5.2	4.5	2.0	1.9	40	17	**FD 15**	26	600	900	44	24	**FA 15**	26	900	44	24
1.5		**4**	1410	10.2	73	0.79	3.8	4.7	2.0	2.0					1300	2300					2300		
3.5	**M 3LB**	**2**	2850	11.7	80	0.84	7.5	5.4	2.2	2.1	61	23	**FD 15**	40	500	900	65	29	**FA 15**	40	900	65	30
2.5		**4**	1420	16.8	82	0.80	5.5	5.2	2.2	2.2					1000	2100					2100		
4.8	**M 4 SA**	**2**	2900	15.8	81	0.88	9.7	6.0	2.0	1.9	213	42	**FD 06**	50	—	400	233	55	**FA 06**	50	400	233	56
3.8		**4**	1430	25.4	81	0.84	8.1	5.2	2.1	2.1					—	950					950		
5.5	**M 4SB**	**2**	2890	18.2	80	0.87	11.4	5.9	2.4	2.0	213	42	**FD 56**	75	—	350	223	55	**FA 06**	75	350	223	56
4.4		**4**	1440	29	82	0.84	9.2	5.3	2.2	2.0					—	900					900		
7.5	**M 4LA**	**2**	2900	25	82	0.87	15.2	6.5	2.4	2.0	270	51	**FD 06**	100	—	350	280	64	**FA 07**	100	350	280	65
6		**4**	1430	40	84	0.85	12.1	5.8	2.3	2.1					—	950					950		
9.2	**M 4LB**	**2**	2920	30	83	0.86	18.6	6.0	2.6	2.2	319	57	**FD 07**	150	—	300	342	73	**FA 07**	150	300	342	75
7.3		**4**	1440	48	85	0.85	14.6	5.5	2.3	2.1					—	800					800		

2/6P — 3000/1000 min^{-1} - S3 60/40% — 50 Hz

													d.c. brake						a.c. brake				
													FD						FA				
P_n kW			n min^{-1}	M_n Nm	η %	cosφ	In 400V A	Is/In	Ms/Mn	Ma/Mn	J_m x 10^{-4} kgm^2	IM B5	Mod	Mb Nm	Z_o 1/h NB	Z_o 1/h SB	J_m x 10^{-4} kgm^2	IM B5	Mod	Mb Nm	Z_o 1/h	J_m x 10^{-4} kgm^2	IM B5
0.25	**M 1SA**	**2**	2850	0.84	60	0.82	0.73	4.3	1.9	1.8	6.9	5.5	**FD 03**	1.75	1500	1700	8.0	8.2	**FA 03**	1.75	1700	8.0	7.9
0.08		**6**	910	0.84	43	0.70	0.38	2.1	1.4	1.5					10000	13000					13000		
0.37	**M 1LA**	**2**	2880	1.23	62	0.80	1.08	4.4	1.9	1.8	9.1	6.9	**FD 03**	3.5	1000	1300	10.2	9.6	**FA 03**	3.5	1300	10.2	9.3
0.12		**6**	900	1.27	44	0.73	0.54	2.4	1.4	1.5					9000	11000					11000		
0.55	**M 2SA**	**2**	2800	1.88	63	0.86	1.47	4.5	1.9	1.7	20	9.2	**FD 04**	5	1500	1800	22	13.1	**FA 04**	5	1800	22	13.0
0.18		**6**	930	1.85	52	0.65	0.77	3.3	2.0	1.9					4100	6300					6300		
0.75	**M 2SB**	**2**	2800	2.6	66	0.87	1.89	4.3	1.8	1.6	25	10.6	**FD 04**	5	1700	1900	27	14.5	**FA 04**	5	1900	27	14.4
0.25		**6**	930	2.6	54	0.67	1.00	3.2	1.7	1.8					3800	6000					6000		
1.1	**M 3SA**	**2**	2870	3.7	71	0.82	2.73	4.9	1.8	1.9	34	15.5	**FD 15**	13	1000	1300	38	22	**FA 15**	13	1300	38	23
0.37		**6**	930	3.8	63	0.70	1.21	3.1	1.5	1.8					3500	5000					5000		
1.5	**M 3LA**	**2**	2880	5.0	73	0.84	3.53	5.1	1.9	2.0	40	17	**FD 15**	13	1000	1200	44	24	**FA 15**	13	1200	44	24
0.55		**6**	940	5.6	64	0.67	1.85	3.5	1.7	1.8					2900	4000					4000		
2.2	**M 3LB**	**2**	2900	7.2	77	0.85	4.9	5.9	2.0	2.0	61	23	**FD 15**	26	700	900	65	29	**FA 15**	26	900	65	30
0.75		**6**	950	7.5	67	0.64	2.5	3.3	1.9	1.8					2100	3000					3000		
3	**M 4SA**	**2**	2910	9.9	74	0.88	6.6	5.6	2.0	2.1	170	36	**FD 56**	37	—	600	182	48	**FA 06**	37	600	182	50
1.1		**6**	960	10.9	73	0.68	3.2	4.5	2.2	2.0					—	2200					2200		
4.5	**M 4SB**	**2**	2910	14.8	78	0.84	9.9	5.8	1.9	1.8	213	42	**FD 56**	37	—	500	223	55	**FA 06**	37	500	223	56
1.5		**6**	960	14.9	74	0.67	4.4	4.2	1.9	2.0					—	2100					2100		
5.5	**M 4LA**	**2**	2920	18.0	78	0.87	11.7	6.2	2.1	1.9	270	51	**FD 06**	50	—	400	280	64	**FA 06**	50	400	280	65
2.2		**6**	960	22	77	0.71	5.8	4.3	2.1	2.0					—	1900					1900		

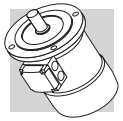

2/8P — 3000/750 min-1 - S3 60/40% — 50 Hz

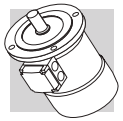

													d.c. brake						a.c. brake				
													FD						FA				
P_n kW			n min-1	M_n Nm	η %	cosφ	In 400V A	Is/In	Ms/Mn	Ma/Mn	J_m x 10^{-4} kgm²	IM B5	Mod	Mb Nm	Z_o 1/h NB	Z_o 1/h SB	J_m x 10^{-4} kgm²	IM B5	Mod	Mb Nm	Z_o 1/h	J_m x 10^{-4} kgm²	IM B5
0.37	**M 1LA**	**2**	2800	1.26	63	0.86	0.99	3.9	1.8	1.9	12.9	7.3	**FD 03**	3.5	1200	1300	14	10.0	**FA 03**	3.5	1300	14	9.7
0.09		**8**	670	1.28	34	0.75	0.51	1.8	1.4	1.5					9500	13000					13000		
0.55	**M 2SA**	**2**	2830	1.86	66	0.86	1.40	4.4	2.1	2.0	20	9.2	**FD 04**	5	1500	1800	22	13.1	**FA 04**	5	1800	22	13.0
0.13		**8**	690	1.80	41	0.64	0.72	2.3	1.6	1.7					5600	8000					8000		
0.75	**M 2SB**	**2**	2800	2.6	68	0.88	1.81	4.6	2.1	2.0	25	10.6	**FD 04**	10	1700	1900	27	14.5	**FA 04**	10	1900	27	14.4
0.18		**8**	690	2.5	43	0.66	0.92	2.3	1.6	1.7					4800	7300					7300		
1.1	**M 3SA**	**2**	2870	3.7	69	0.84	2.74	4.6	1.8	1.7	34	15.5	**FD 15**	13	1000	1300	38	22	**FA 15**	13	1300	38	23
0.28		**8**	690	3.9	44	0.56	1.64	2.3	1.4	1.7					3400	5000					5000		
1.5	**M 3LA**	**2**	2880	5.0	69	0.85	3.69	4.7	1.9	1.8	40	17	**FD 15**	13	1000	1200	44	24	**FA 15**	13	1200	44	24
0.37		**8**	690	5.1	46	0.63	1.84	2.1	1.6	1.6					3300	5000					5000		
2.4	**M 3LB**	**2**	2900	7.9	75	0.82	5.6	5.4	2.1	2.0	61	23	**FD 15**	26	550	700	65	29	**FA 15**	26	700	65	30
0.55		**8**	700	7.5	54	0.58	2.5	2.6	1.8	1.8					2000	3500					3500		
3	**M 4SA**	**2**	2920	9.8	72	0.85	7.1	5.6	2.0	1.8	162	36	**FD 56**	37	—	600	182	48	**FA 06**	37	600	182	50
0.75		**8**	710	10.1	61	0.64	2.8	3.0	1.7	1.8					—	3400					3400		
4	**M 4SB**	**2**	2870	13.3	73	0.84	9.4	5.6	2.3	2.4	213	42	**FD 56**	37	—	500	223	55	**FA 06**	37	500	223	56
1		**8**	690	13.8	66	0.62	3.5	2.9	1.9	1.8					—	3500					3500		
5.5	**M 4LA**	**2**	2870	18.3	75	0.84	12.6	6.1	2.4	2.5	270	51	**FD 06**	50	—	400	280	64	**FA 06**	50	400	280	65
1.5		**8**	690	21	68	0.63	5.1	2.9	1.9	1.9					—	2400					2400		

2/12P — 3000/500 min^{-1} - S3 60/40% — 50 Hz

													d.c. brake						a.c. brake				
													FD						FA				
P_n kW			n min^{-1}	M_n Nm	η %	cosφ	In 400V A	Is/In	Ms/Mn	Ma/Mn	J_m x 10^{-4} kgm^2	IM B5	Mod	Mb Nm	Z_o 1/h NB	Z_o 1/h SB	J_m x 10^{-4} kgm^2	IM B5	Mod	Mb Nm	Z_o 1/h	J_m x 10^{-4} kgm^2	IM B5
0.55	**M 2SA**	**2**	2820	1.86	64	0.89	1.39	4.2	1.6	1.7	25	10.6	**FD 04**	5	1000	1300	27	14.5	**FA 04**	5	1300	27	14.4
0.09		**12**	430	2.0	30	0.63	0.69	1.8	1.9	1.8					8000	12000					12000		
0.75	**M 3SA**	**2**	2900	2.5	65	0.81	2.06	5.2	1.9	2.1	34	15.5	**FD 15**	13	700	900	38	22	**FA 15**	13	900	38	23
0.12		**12**	460	2.5	33	0.43	1.22	1.9	1.3	1.6					5000	7000					7000		
1.1	**M 3LA**	**2**	2850	3.7	65	0.85	2.87	4.5	1.6	1.8	40	17	**FD 15**	13	700	900	44	24	**FA 15**	13	900	44	24
0.18		**12**	430	4.0	26	0.54	1.85	1.5	1.3	1.5					4000	6000					6000		
1.5	**M 3LB**	**2**	2900	4.9	67	0.86	3.76	5.6	1.9	1.9	54	21	**FD 15**	13	700	900	58	27	**FA 15**	13	900	58	28
0.25		**12**	440	5.4	36	0.46	2.18	1.8	1.7	1.8					3800	5000					5000		
2	**M 3LC**	**2**	2850	6.7	70	0.84	4.9	4.9	1.8	1.7	61	23	**FD 55**	18	—	700	65	29	**FA 15**	18	700	65	30
0.3		**12**	450	6.4	38	0.47	2.4	1.7	1.6	1.7					—	3500					3500		
3	**M 4SA**	**2**	2920	9.8	74	0.87	6.7	6.8	2.3	1.9	213	42	**FD 56**	37	—	450	223	55	**FA 06**	37	450	223	56
0.5		**12**	470	10.2	51	0.43	3.3	2.0	1.7	1.6					—	3000					3000		
4	**M 4LA**	**2**	2920	13.1	75	0.89	8.6	5.9	2.4	2.3	270	51	**FD 56**	37	—	400	280	64	**FA 06**	37	400	280	65
0.7		**12**	460	14.5	53	0.44	4.3	1.9	1.7	1.6					—	2800					2800		

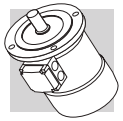

BN - IM B5

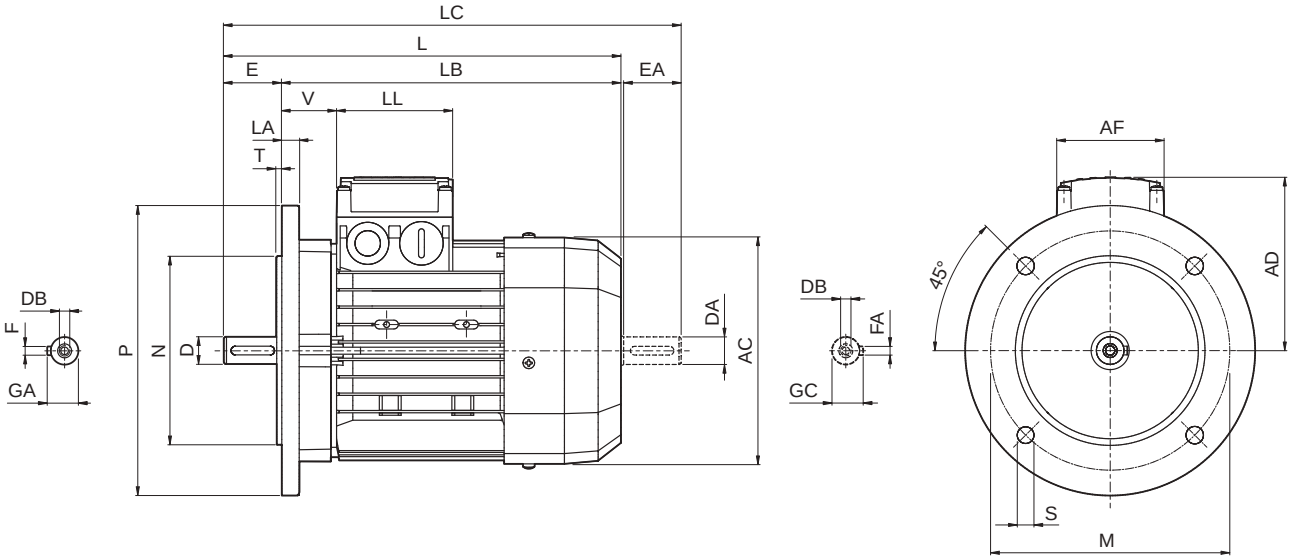

	Shaft					Flange						Motor							
	D DA	E EA	DB	GA GC	F FA	M	N	P	S	T	LA	AC	L	LB	LC	AD	AF	LL	V
BN 56	9	20	M3	10.2	3	100	80	120	7	3	8	110	185	165	207	91	74	80	34
BN 63	11	23	M4	12.5	4	115	95	140	9.5		10	121	207	184	232	95			26
BN 71	14	30	M5	16	5	130	110	160		3.5		138	249	219	281	108			37
BN 80	19	40	M6	21.5	6	165	130	200	11.5		11.5	156	274	234	315	119			38
BN 90	24	50	M8	27	8							176	326	276	378	133	98	98	44
BN 100	28	60	M10	31		215	180	250	14	4	14	195	367	307	429	142			50
BN 112											15	219	385	325	448	157			52
BN 132	38	80	M12	41	10	265	230	300			20	258	493	413	576	193	118	118	58
BN 160 MR	42 38 (1)	110 80 (1)	M16 M12 (1)	45 41 (1)	12 10 (1)	300	250	350	18.5	5	15		562	452	645				218
BN 160 M												310	596	486	680	245	187	187	51
BN 160 L																			
BN 180 M	48 38 (1)	110 110 (1)	M16 M12 (1)	51.5 41 (1)	14 10 (1)							310	640	530	724				
BN 180 L	48 42 (1)		M16 M16 (1)	51.5 45 (1)	14 12 (1)						18	348	708	598	823	261			52
BN 200 L	55 42 (1)		M20 M16 (1)	59 45 (1)	16 12 (1)	350	300	400					722	612	837				66

NOTE:
1) These values refer to the rear shaft end.

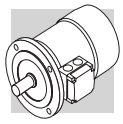

BN_FD ; IM B5

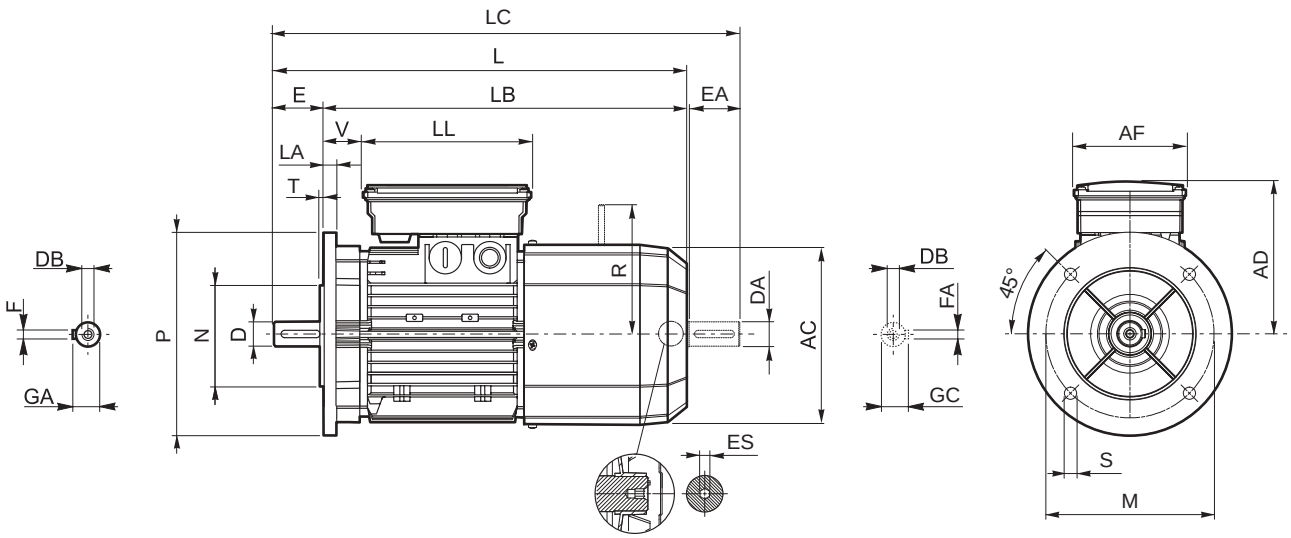

	Shaft					Flange						Motor									
	D DA	E EA	DB	GA GC	F FA	M	N	P	S	T	LA	AC	L	LB	LC	AD	AF	LL	V	R	ES
BN 63	11	23	M4	12.5	4	115	95	140	9.5	3	10	121	272	249	297	122	98	133	14	96	5
BN 71	14	30	M5	16	5	130	110	160	9.5	3.5		138	310	280	342	135			25	103	
BN 80	19	40	M6	21.5	6	165	130	200	11.5		11.5	156	346	306	388	146			41	129	
BN 90 S	24	50	M8	27	8							176	409	359	461	149	110	165	39		6
BN 90 L																146				160	
BN 100	28	60	M10	31		215	180	250	14	4	14	195	458	398	521	158		165	62		
BN 112											15	219	484	424	547	173		165	73	199	
BN 132	38	80	M12	41	10	265	230	300			20	258	603	523	686	210	140	188	46	204 (2)	
BN 160 MR	42 38 (1)	110 80 (1)	M16 M12 (1)	45 41 (1)	12 10 (1)	300	250	350	18.5	5	15		672	562	755				161	226	
BN 160 M												310	736	626	820	245	187	187	51	266	—
BN 160 L	42 38 (1)	110 80 (1)	M16 M12 (1)	45 41 (1)	12 10 (1)																
BN 180 M	48 38 (1)			51.5 41 (1)	14 10 (1)								780	670	864						
BN 180 L	48 42 (1)	110 110 (1)	M16 M16 (1)	51.5 45 (1)	14 12 (1)						18	348	866	756	981	261			52	305	
BN 200 L	55 42 (1)		M20 M16 (1)	59 45 (1)	16 12 (1)	350	300	400	18.5				878	768	993				64		

NOTE:
1) These values refer to the rear shaft end.
2) For FD07 brake value R=226.

ES hexagon is not supplied with PS option.

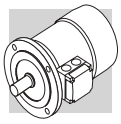

BN_FA - IM B5

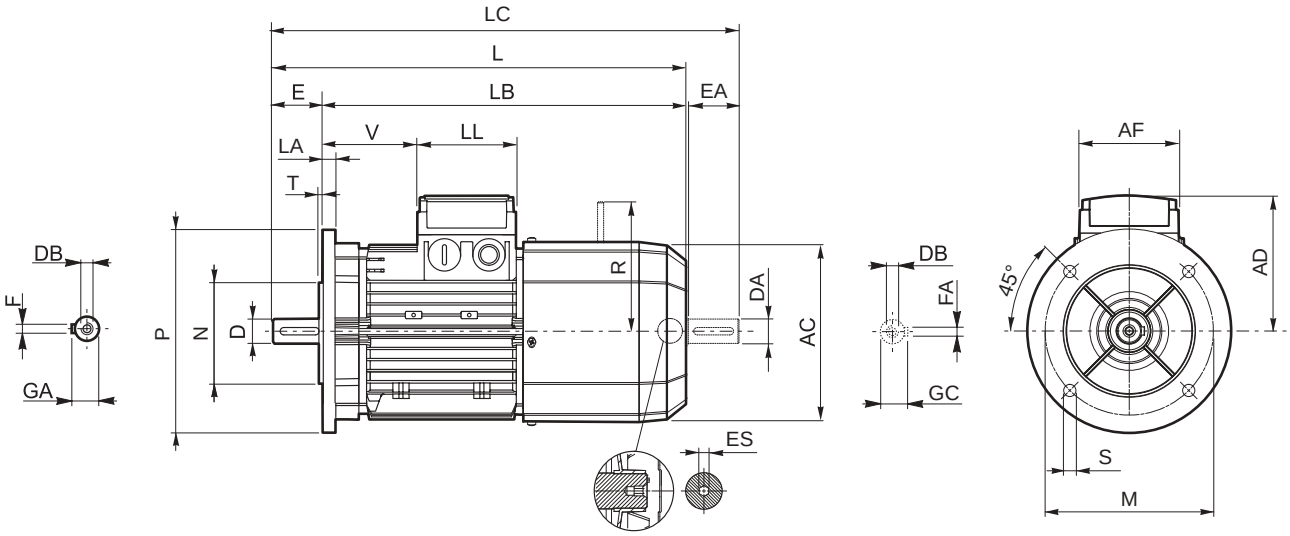

	Shaft					Flange						Motor									
	D DA	E EA	DB	GA GC	F FA	M	N	P	S	T	LA	AC	L	LB	LC	AD	AF	LL	V	R	ES
BN 63	11	23	M4	12.5	4	115	95	140	9.5	3	10	121	272	249	297	95	74	80	26	116	5
BN 71	14	30	M5	16	5	130	110	160		3.5		138	310	280	342	108			68	124	
BN 80	19	40	M6	21.5	6	165	130	200	11.5		11.5	156	346	306	388	119			83	134	
BN 90	24	50	M8	27	8							176	409	359	461	133	98	98	95	160	6
BN 100	28	60	M10	31		215	180	250	14	4	14	195	458	398	521	142			119		
BN 112											15	219	484	424	547	157			128	198	
BN 132	38	80	M12	41	10	265	230	300			20	258	603	523	686	210	140	188	46	200 (2)	
BN 160 MR	42 38 (1)	110 80 (1)	M16 M12 (1)	45 41 (1)	12 10 (1)	300	250	350	18.5	5	15		672	562	755	193	118	118	218	217	
BN 160 M												310	736	626	820	245	187	187	51	247	—
BN 160 L																					
BN 180 M				51.5 41 (1)	14 10 (1)								780	670	864						

NOTE:
1) These values refer to the rear shaft end.
2) For FA07 brake value R=217.

Dimensions AD, AF, LL and V, relevant to terminal box of motors BN…FA featuring the separate brake supply (option SA), are coincident with corresponding dimensions of same-size BN…FD motors

ES hexagon is not supplied with PS option.

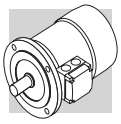

M

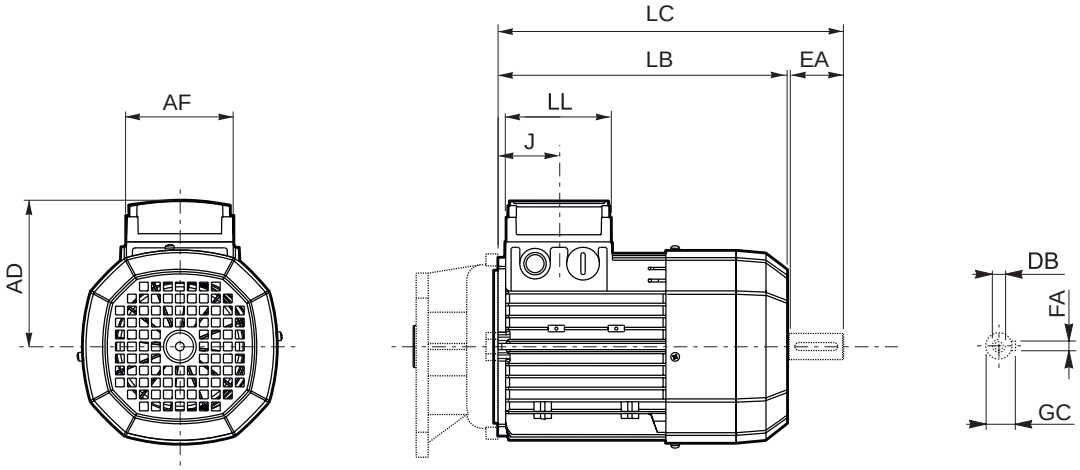

	Rear shaft end					Motor						
	DA	**EA**	**DB**	**FA**	**GC**	**AC**	**LB**	**LC**	**AF**	**LL**	**J**	**AD**
M 0	9	20	M3	3	10.2	110	133	155	74	80	42	91
M 05	11	23	M4	4	12.5	121	165	191			48	95
M 1	14	30	M5	5	16	138	187	219			45	108
M 2 S	19	40	M6	6	21.5	156	202	245			44	119
M 3 S	28	60	M10	8	31	195	230	293	98	98	53.5	142
M 3 L							262	325				
M 4	38	80	M12	10	41	258	361	444	118	118	64.5	193
M 4 LC							396	479				
M 5 S						310	418	502	187	187	77	245
M 5 L							462	546				

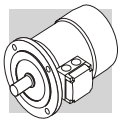

M_FD

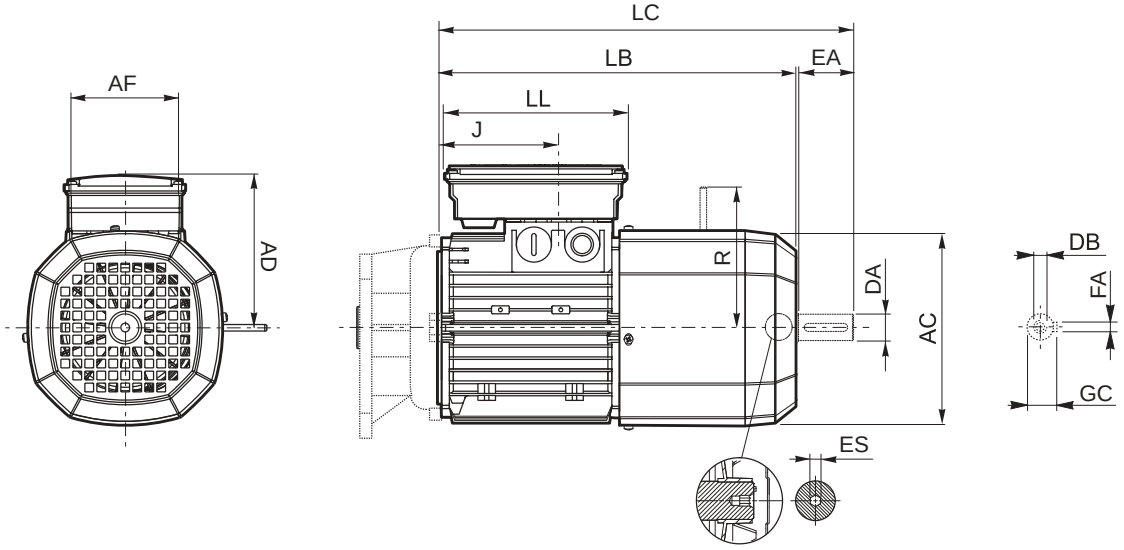

	Rear shaft end					Motor								
	DA	**EA**	**DB**	**FA**	**GC**	**AC**	**LB**	**LC**	**AF**	**LL**	**J**	**AD**	**R**	**ES**
M 05	11	23	M4	4	12.5	121	231	256	98	133	48	122	96	5
M 1	14	30	M5	5	16	138	248	280			73	135	103	
M 2 S	19	40	M6	6	21.5	156	272	314			88	146	129	
M 3 S	28	60	M10	8	31	195	326	389	110	165	124.5	158	160	6
M 3 L							353	416						
M 4	38	80	M12	10	41	258	470	553	140	188	185.5	210	204 (1)	
M 4 LC							495	578			64.5		226	
M 5 S						310	558	642	187	187	77	245	266	—
M 5 L							602	686						

NOTE:
1) For FD07 brake value R=226.

ES hexagon is not supplied with PS option.

M_FA

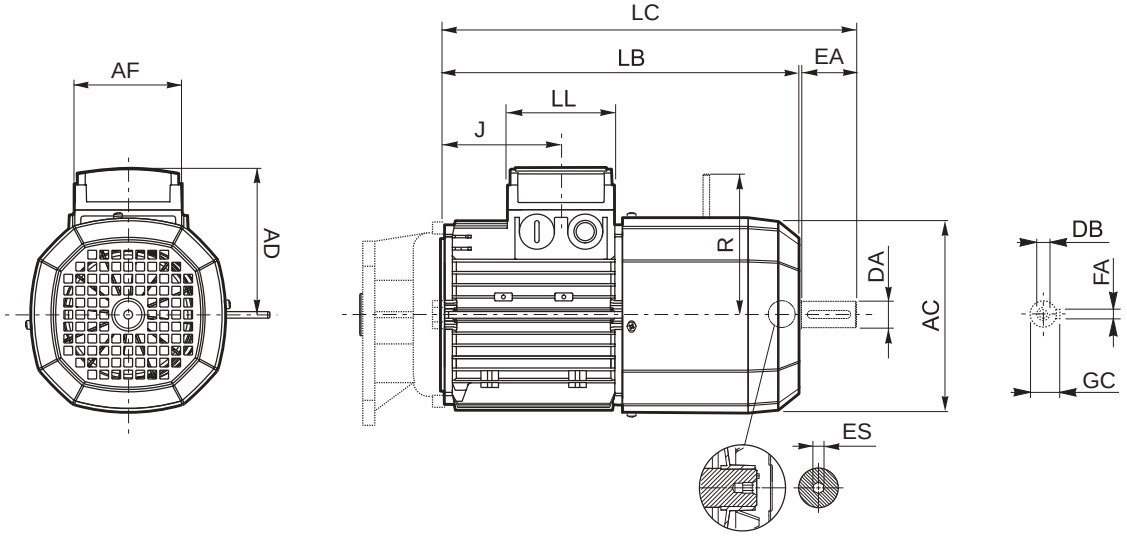

	Rear shaft end					Motor								
	DA	**EA**	**DB**	**FA**	**GC**	**AC**	**LB**	**LC**	**AF**	**LL**	**J**	**AD**	**R**	**ES**
M 05	11	23	M4	4	12.5	121	231	256	74	80	48	95	116	5
M 1	14	30	M5	5	16	138	248	280			73	108	124	
M 2 S	19	40	M6	6	21.5	156	272	314			88	119	134	
M 3 S	28	60	M10	8	31	195	326	389	98	98	124.5	142	160	6
M 3 L							353	416						
M 4	38	80	M14	10	41	258	470	553	140	188	185.5	210	200 (1)	
M 4 LC							495	578			64.5		217	
M 5 S			M12			310	558	642	187	187	77	245	247	—
M 5 L							602	686						

NOTE:
1) For FA07 brake value R=217.

Dimensions AD, AF, LL and V, relevant to terminal box of motors M…FA featuring the separate brake supply (option SA), are coincident with corresponding dimensions of same-size M…FD motors

ES hexagon is not supplied with PS option.

INDEX OF REVISIONS

BR_CAT_CAFS_STD_ENG_R09_3	
	Description
170	Amended drawings for the backstop option of serie A gearboxes.
486, 487	Updated 1.5 kW technical data for gearmotors series S.
512…571	Updated section “Electric Motors”.
...	Removed combinations of gearboxes C514 and F514 with inputs P132 and M4.
40…45	Updated 0.37 ; 0.55 kW technical data for gearmotors series C.

2018 03 31

This publication supersedes and replaces any previous edition and revision. We reserve the right to implement modifications without notice.
This catalogue cannot be reproduced, even partially, without prior consent.

Bonfiglioli
Forever Forward

We have a relentless commitment to excellence, innovation and sustainability. Our team creates, distributes and services world-class power transmission and drive solutions to keep the world in motion.

HEADQUARTERS
Bonfiglioli Riduttori S.p.A.
Via Giovanni XXIII, 7/A
40012 Lippo di Calderara di Reno
Bologna (Italy)
tel: +39 051 647 3111
fax: +39 051 647 3126
bonfiglioli@bonfiglioli.com
www.bonfiglioli.com